ME-1170

SERVICE MANUAL

CATERPILLAR®

D353 AND G353 ENGINES

CATERPILLAR TRACTOR CO. PEORIA, ILLINOIS, U.S.A.

CATERPILLAR®

ISSUED 8-62

SERVICE MANUAL

for

CATERPILLAR®

D353 AND G353 ENGINES

SERIAL NUMBERS 46B1-UP, 47B1-UP AND 64B1-UP

Caterpillar Tractor Co., General Offices, Peoria, Illinois. • Caterpillar Americas Co., Peoria, Illinois. • Caterpillar Overseas S.A., Geneva. • Caterpillar of Australia Pty. Ltd., Melbourne. • Caterpillar Brasil S.A., São Paulo. • Caterpillar Tractor Co. Ltd., Glasgow. • Caterpillar of Canada Ltd., Toronto. • Caterpillar France S.A., Grenoble. • Caterpillar (Africa) (Pty.) Ltd., Johannesburg. • Caterpillar Mexicana S.A. de C.V., Monterrey.

PRINTED IN U.S.A.

Digitized by the Internet Archive
in 2025

https://archive.org/details/manualsplus_09951

General Instructions

These general instructions will be extremely helpful in following the detailed instructions in the manual. They should be read and kept in mind while assembling or disassembling the machine.

SYMBOLS

Throughout this Service Manual, symbols are used on the illustrations to point out parts which are to be removed or disconnected. These removals or disconnections are indicated by the following code:

☐ **Remove** ◗ **Disconnect**

The part to be removed or disconnected is pointed out by a number in the symbol and this number corresponds to the part description listed in the caption copy beneath the picture. The disconnect arrow points as close as possible to point of disconnection.

SAFETY AND WORKMANSHIP SUGGESTIONS

There are certain practices which should be followed in the interest of safety and good workmanship when working around machinery.

Always show proper respect for weight. Do not attempt to lift heavy parts when a hoist should be used. Never leave heavy parts in an unstable position. When raising a portion of a machine, be sure the machine is blocked securely at front and rear. The weight should be supported by blocks rather than lifting equipment.

When using a hoist, follow the recommendations outlined in the manual. Fabricate and use the illustrated lifting devices in conjunction with the hoist to achieve the proper balance of the assemblies being lifted and to assure safe handling. (See special topic, GENERAL INSTRUCTIONS, DIESEL ENGINE REMOVAL).

Tools

All service tools should be kept in first-class condition. Use the proper tool for the job at hand. Special service tools are available for specific jobs and should be used when recommended. The use of these tools will save time and prevent damage to parts.

In the manual, puller arrangements are illustrated for separating tightly fitted parts. However, if the machine is being reconditioned in a shop, it might be easier and faster to use a press. When pulling a bearing or gear from a shaft, always use a centering spacer between the forcing screw and end of shaft.

Disassembly

If a part offers unexpected resistance to removal, check carefully to see that all nuts and bolts have been removed before using force. Possibly some other part is interfering and should be removed first. Parts which are fitted together with tapered splines are always very tight. If they are not tight when disassembled, inspect the tapered splines and discard the part if the splines are worn.

Identical parts should be kept in order or marked so they can be reinstalled in the same position from which they were removed.

When shims are used, be sure to remove all of them. Tie the shims together and identify them as to their location. Keep them clean and flat until they are reinstalled.

INSPECT FREQUENTLY AND CORRECT MINOR TROUBLES

A bearing changed in time will save a shaft. An oil leak, corrected, prevents loss of lubricant and an overheated bearing. A nut tightened in time will prevent the loss or breakage of an associated part.

MAINTAIN ADJUSTMENTS

Operating adjustments have been kept to a minimum on Caterpillar-built machines but they are important and should be carefully maintained.

Follow the recommendations in the Operation and Maintenance Instructions.

KEEP DIRT OUT

The most important single item in preserving the long life of the machine is to keep dirt out of vital working parts. Caterpillar Tractor Co. has taken precautions to safeguard against dirt entering working parts. Enclosed compartments, seals and filters have been provided to keep the supply of air, and lubricants clean. It is important that the effectiveness of these safeguards be maintained. Filters should be replaced or cleaned regularly. Worn seals or broken gaskets should be replaced immediately. Be sure seal lips are facing in the correct direction.

Anti-friction bearings, properly lubricated with clean lubricant, will last indefinitely. Abrasives in the lubricant will cause rapid wear on the extremely hard races and balls or rollers. Dirt in an anti-friction bearing can cause the bearing to lock resulting in the shaft turning in the inner race or the outer race turning within the cage. Dirt and abrasives in lubricants will embed in sleeve bearings and act like fine sandpaper against the shaft causing extremely rapid wear.

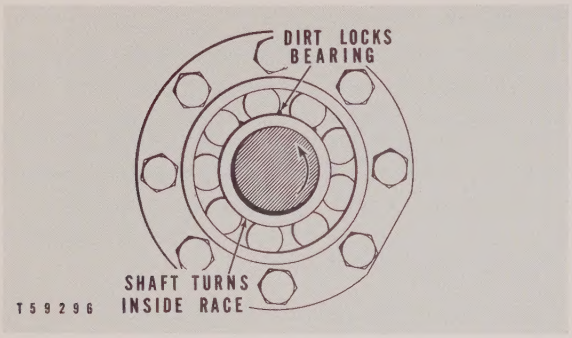

EFFECT OF DIRT IN BEARING

Lubricant must be changed at recommended intervals. Use clean containers. Before removing the filler cap, brush away the dirt.

Whenever hydraulic, fuel, lubricating oil, air or brake lines are to be disconnected, clean the point of disconnection as well as the adjacent area. As soon as a disconnection is made, cap, plug or tape the line or opening to prevent entry of foreign material. The same recommendations for cleaning and covering apply when access covers or inspection plates are removed.

DIESEL ENGINE REMOVAL

Unless otherwise specified, all engine removals should be accomplished using an adjustable lifting beam. For maximum efficiency of the lifting apparatus, all supporting members (chains and cables) should be parallel to each other and as near perpendicular as possible to the top of the cylinder head. See the illustration.

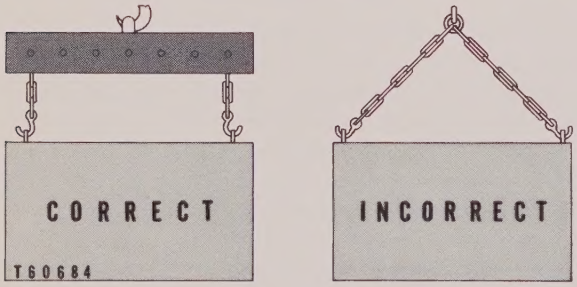

LIFTING ENGINE

In cases where it is necessary to remove the engine on an angle, it must be remembered that the lifting capacity of the lifting eyes on the engine diminishes as the angle between the supporting members and cylinder head becomes less than 90°. Lifting eyes and brackets should never be bent and should only have stress in tension. A length of pipe and a washer can be utilized, as shown, to help relieve these stresses on lifting eyes.

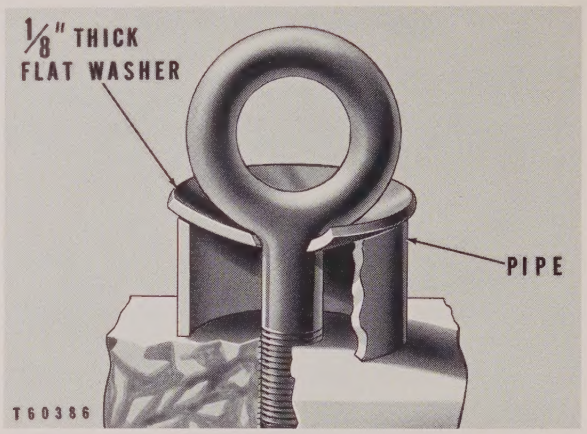

LIFTING EYE

CLEANING AND INSPECTION

Clean all parts thoroughly after they are removed and inspect them. Be sure all lubricant passages and oil holes are open. Badly worn or damaged parts should not be reinstalled on the machine. Cover all parts to keep them clean until they are installed and leave the new parts in the container.

Anti-friction bearings should receive special handling. As soon as a bearing is removed, cover it to keep dirt and abrasives out. Wash bearings in nonflammable cleaning solution and allow bearings to drain dry. Do not blow dry with air pressure or spin the bearings. Inspect the races and balls or rollers. Discard the bearings if they are pitted, scored or burned. If the bearing is serviceable, coat it with light oil and wrap it in clean paper. Do not unwrap new bearings until time of installation.

Replace all damaged O-rings and gaskets. In some assemblies and systems, it is recommended that O-rings be replaced when components are being reassembled.

Inspect parts carefully. Refer to the topic, SPECIFICATIONS, as a guide for parts replacement.

SPECIFICATIONS

The manual SPECIFICATIONS sections contain dimensions for new parts and a suggested guide for amount of wear that might normally be considered a reasonable figure to use in determining when to replace parts. These wear dimensions are shown after the description, "permissible clearance". The specifications are provided to help determine when new parts should be installed. This information should not be regarded as the only factor in determining when to replace parts. Past performance should be the governing factor for part replacement. Even

though parts are worn they may still be satisfactory. The remaining service life of these parts must be considered when deciding if parts should be replaced. If a machine is disassembled for reconditioning, it is well to replace parts not completely worn out if the remaining service life is deemed short.

ASSEMBLY

Clean the rust preventive compound from all machined surfaces of new parts before installing them. Be sure to install parts in the proper location and position.

Bearings which have a shrink fit should be heated in oil not to exceed 250° Fahrenheit, before attempting to install them. Other parts which require a shrink fit can be heated to a higher temperature in an electric oven or by other suitable means, but not to exceed a temperature which would remove hardness.

Parts which are heated to facilitate assembly must sometimes be allowed to cool and then pressed together again. Often the parts will separate as they cool and shrink.

When one part is pressed into another, use white lead or a suitable prepared compound to lubricate the mating surfaces. Tapered parts, however, should be assembled dry. Before assembling parts with tapered splines be sure the splines are clean, dry and free from burrs. Then press the parts together tightly.

When installing new bearings or reinstalling used bearings, lubricate the bearings liberally. Bearings that are to be preloaded must have a liberal film of oil over the entire assembly before the preloading procedure is carried out.

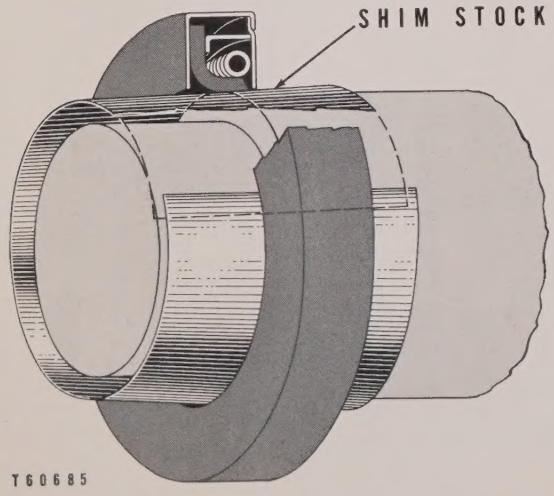

PROTECTING SEAL DURING INSTALLATION

Lubricant should be applied to the lip of all lip-type rubber seals before installation. This will prevent damage to the seal during the initial running until the oil being sealed has contacted the sealing face. Apply lubricant to an O-ring seal before installation to prevent rolling and twisting of the seal.

Silicone seals are subject to swelling when cleansed or immersed in kerosene or diesel fuel.

Packing-type seals should always be renewed if the contacting part is removed.

When installing a bearing, spacer or washer against a shoulder on a shaft, be sure the chamfered side is toward the shoulder. If the washer is turned in the wrong direction the radius may interfere and prevent washer from seating against the shoulder.

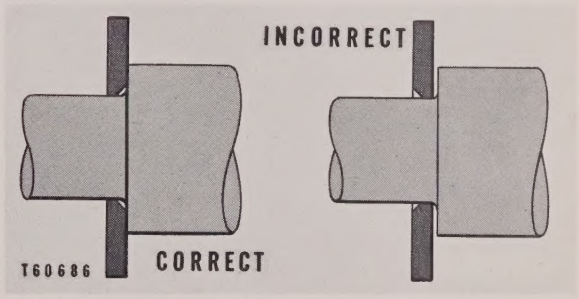

HOW TO INSTALL SPACER AGAINST SHOULDER ON SHAFT

Do not install sleeve bearings by driving them in with a hammer. Use a press if possible and be sure to apply the pressure directly in line with the bore. If a bearing must be driven in, use a bearing driver or a bar with a smooth flat end. If the sleeve bearing has an oil hole, be sure it is aligned with the oil hole in the part into which it is assembled.

Install gaskets where required and use new ones if necessary. Never use cork or felt gaskets or seals a second time. Be sure the holes in the gaskets correspond with the lubricant passages in the mating parts. If it is necessary to make gaskets, select stock of the proper type and thickness and be sure to cut sufficient holes in the right places. Blank gaskets can cause serious damage.

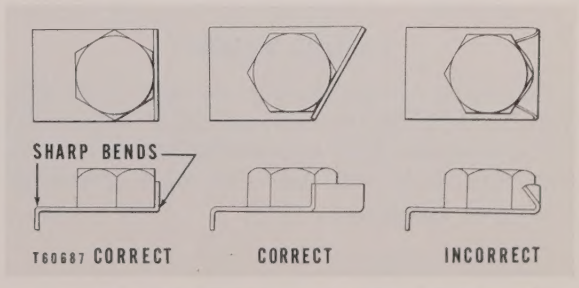

HOW TO INSTALL FLAT METAL LOCKS

Use bolts of the correct length. A bolt which is too long may "bottom" before the head is tight against the part it is to hold, and in addition the threads may be damaged when the bolt is removed.

If a bolt is too short, there may not be enough threads to hold the part securely.

Lockwashers, cotter pins or flat metal locks should be used to lock each nut and bolt. Flat metal locks must be installed properly to be effective. Bend one end of the lock sharply around the edge of the part. Bend the other end sharply against one flat surface of the nut or bolt head. Do not bend the lock against more than one side of the nut.

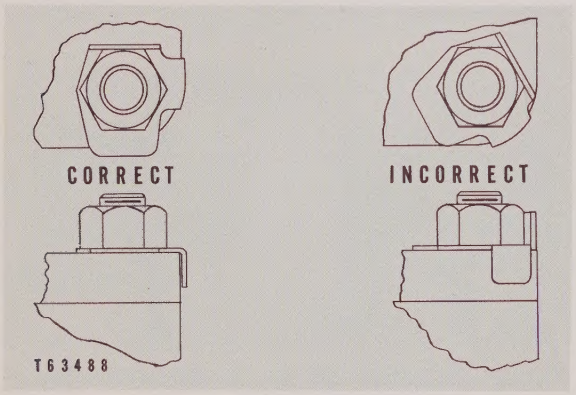

METHOD FOR LOCK POSITIONING AND BENDING

When assembling a machine, complete each step in turn. Do not leave one part partially assembled and start assembling some other part. Make all adjustments as recommended. Always check the job after it is completed to see that nothing has been overlooked.

PREPARATION FOR STARTING

After assembling a machine, lubricate it thoroughly. Fill the various compartments with the type and grade of lubricant recommended in the Operation and Maintenance Instructions.

Recheck the various adjustments by operating the machine before returning it to the job.

TORQUE VALUES

Unless reference is made in the copy to the topic, SPECIFICATIONS, the standard torque values listed in the chart should be used for standard heat-treated bolts and studs and steel nuts when assembling Caterpillar Equipment.

GENERAL USAGE

(Tightening Torques)

SIZE (NC and NF)	TORQUE (Pound Feet)	SIZE (NC and NF)	TORQUE (Pound Feet)
1/4"	6-12	3/4"	230-300
5/16"	13-23	7/8"	360-480
3/8"	27-37	1"	560-720
7/16"	40-60	1 1/8"	700-900
1/2"	65-85	1 1/4"	880-1120
9/16"	95-125	1 3/8"	1050-1350
5/8"	130-170	1 1/2"	1300-1700

HYDRAULIC VALVE BODIES

(Tightening Torques)

SIZE (NC and NF)	TORQUE (Pound Feet)
5/16"	13-17
3/8"	24-30
7/16"	39-47
1/2"	60-70
5/8"	118-142

DECIMAL EQUIVALENTS

The decimal dimensioning system provides a more accurate means of specifying dimensions and tolerances .The following table includes the standard conversions from fractions to decimals. Decimals are shown in the standard two, three and four place designation.

1/64	.02	.016	.0156	33/64	.52	.516	.5156
1/32	.03	.031	.0312	17/32	.53	.531	.5312
3/64	.05	.047	.0469	35/64	.55	.547	.5469
1/16	.06	.062	.0625	9/16	.56	.562	.5625
5/64	.08	.078	.0781	37/64	.58	.578	.5781
3/32	.09	.094	.0938	19/32	.59	.594	.5938
	.10				.60		
7/64	.11	.109	.1094	39/64	.61	.609	.6094
1/8	.12	.125	.1250	5/8	.62	.625	.6250
9/64	.14	.141	.1406	41/64	.64	.641	.6406
5/32	.16	.156	.1562	21/32	.66	.656	.6562
11/64	.17	.172	.1719	43/64	.67	.672	.6719
3/16	.19	.188	.1875	11/16	.69	.688	.6875
13/64	.20	.203	.2031	45/64	.70	.703	.7031
7/32	.22	.219	.2188	23/32	.72	.719	.7188
15/64	.23	.234	.2344	47/64	.73	.734	.7344
1/4	.25	.250	.2500	3/4	.75	.750	.7500
17/64	.27	.266	.2656	49/64	.77	.766	.7656
9/32	.28	.281	.2812	25/32	.78	.781	.7812
19/64	.30	.297	.2969	51/64	.80	.797	.7969
5/16	.31	.312	.3125	13/16	.81	.812	.8125
21/64	.33	.328	.3281	53/64	.83	.828	.8281
11/32	.34	.344	.3438	27/32	.84	.844	.8438
23/64	.36	.359	.3594	55/64	.86	.859	.8594
3/8	.38	.375	.3750	7/8	.88	.875	.8750
25/64	.39	.391	.3906	57/64	.89	.891	.8906
	.40				.90		
13/32	.41	.406	.4062	29/32	.91	.906	.9062
27/64	.42	.422	.4219	59/64	.92	.922	.9219
7/16	.44	.438	.4375	15/16	.94	.938	.9375
29/64	.45	.453	.4531	61/64	.95	.953	.9531
15/32	.47	.469	.4688	31/32	.97	.969	.9688
31/64	.48	.484	.4844	63/64	.98	.984	.9844
1/2	.50	.500	.5000	1	1.00	1.000	1.0000

Service Manual
Section Index Tab
FORM 34261-1

HC64701

ISSUED 5-64

ENGINE

TABLE OF CONTENTS

	Section	Group
Index	3A-10	30.1
Specifications	3A-10	40.1
Cutaway Views	3A-10	60.1
Cooling System (With Radiator)	3A-10	70.2
Cooling System (With Radiator — Later)	3A-10	70.4
Cooling System (With Heat Exchanger)	3A-10	80
Cooling System (With Heat Exchanger — Later)	3A-10	80.1
Cooling System (With Keel Cooling)	3A-10	90
Cooling System (With Keel Cooling — Later)	3A-10	90.1
Water Temperature Regulator	3A-10	100.1
Water Temperature Regulator (Later)	3A-10	100.3
Expansion Tank	3A-10	120
Expansion Tank (Later)	3A-10	120.1
Fan Group	3A-10	130.1
Fan Group (Later)	3A-10	130.3
Water Pump	3A-10	140.1
Water Pump (Later)	3A-10	140.2
Raw Water Pump	3A-10	150
Raw Water Pump (Later)	3A-10	150.1
Radiator	3A-10	160.1
Lubricating System	3A-10	170.1
Lubricating System (Later)	3A-10	170.3
Oil Pan	3A-10	180.1
Oil Pan (Marine)	3A-10	180.2
Oil Pump	3A-10	190.1
Oil Cooler	3A-10	200.2
Oil Cooler (With Torque Converter)	3A-10	200.3
Oil Cooler (With Marine Gear)	3A-10	200.4
Oil Coolers (Later)	3A-10	200.6
Oil Filters	3A-10	210.2
Oil Filters (With Torque Converter)	3A-10	210.3
Oil Filters (Later)	3A-10	210.5
Sump Pump	3A-10	220
Fuel System	3A-10	230.2
Fuel System (With Torque Converter)	3A-10	230.3
Fuel System (Later)	3A-10	230.5
Fuel Supply Equipment	3A-10	240.2

	Section	Group
Fuel Supply Equipment (With Torque Converter)	3A-10	240.3
Fuel Supply Equipment (Later)	3A-10	240.5
Fuel Injection Equipment	3A-10	250.1
Ignition System (Natural Gas with American Bosch Magneto)	3A-10	259
Ignition System (Natural Gas with Fairbanks-Morse Magneto)	3A-10	259.1
Accessory Drive and Governor	3A-10	260.1
Fuel Pump and Governor Drive (Later)	3A-10	260.2
Governor (Natural Gas)	3A-10	260.4
Magneto and Governor Drive (Natural Gas)	3A-10	265
Line Pressure Regulator (Natural Gas)	1A-10	269
Air Induction and Exhaust System (Dry Manifolds)	3A-10	270.1
Air Induction and Exhaust System (Water-cooled Manifold)	3A-10	270.2
Air Induction and Exhaust System (Later)	3A-10	270.4
Air Induction and Exhaust System (Natural Gas with Ensign Carburetor)	3A-10	270.5
Air Induction and Exhaust System (Natural Gas with Impco Carburetor)	3A-10	270.7
Turbocharger (Schwitzer 4D)	2A-10	271.1
Turbocharger (Shrouded Impeller Type)	3A-10	271
Turbocharger (Open Impeller Type)	4A-10	271
Cylinder Heads	3A-10	280.1
Cylinder Head (Natural Gas)	3A-10	280.3
Valves and Valve Mechanism	3A-10	290.1
Valves and Valve Mechanism (Later)	3A-10	290.2
Vibration Damper	3A-10	300.1
Front Support	3A-10	310.1
Front Support (Later)	3A-10	310.3
Timing Gears	3A-10	320.1
Timing Gears (Natural Gas)	3A-10	320.3
Pistons, Rings and Connecting Rods	3A-10	340
Pistons, Rings and Connecting Rods (Later)	3A-10	340.1
Piston, Rings and Connecting Rods (Natural Gas)	3A-10	340.2
Cylinder Liners	3A-10	350
Main Bearings	3A-10	360
Crankshaft	3A-10	370.1
Flywheel and Flywheel Housing	3A-10	390.1

ISSUED 5-64

ENGINE

INDEX

A	Group Page
Accessory Drive Housing	260.1 – 2
Accessory Shaft	260.1 – 1
Adjustments:	
Carburetor and Regulator	170.5 – 3
	270.7 – 2
Lifter Setting	250.1 – 5
Governor	260.1 – 9
	260.4 – 1
Magneto	259 – 4
	259.1 – 5
Air Cleaner	270.1 – 4
	270.2 – 3
	270.5 – 6
Air Induction and Exhaust System	270.1 – 1
	270.2 – 1
	270.5 – 1
	270.7 – 1
Air Inlet Manifold	270.1 – 1
	270.2 – 1
	270.5 – 5
Altitude Operation	271 – 3

B	
Bearings:	
Connecting Rod	340 – 3
Main	360 – 1
Piston Pin	340 – 4
	340.2 – 2
Turbocharger	271 – 7
Bell, Suction	190.1 – 5
Breather, Crankcase	210.2 – 3
	210.3 – 3
Bypass:	
Fuel	240.2 – 2
	240.3 – 3
Oil Filter and Oil Cooler	210.2 – 2
	210.3 – 2

C	
Camshaft	320.1 – 3
	320.3 – 3
Camshaft, Fuel Pump	250.1 – 4
Camshaft Gear	320.1 – 3
	320.3 – 3
Cap, Expansion Tank	120 – 1
Cap, Radiator	160.1 – 2
Carburetor	270.5 – 1
	270.7 – 1
Carburetor Regulator	270.5 – 1
Cartridge, Turbocharger	271 – 6
Chambers, Precombustion	280.1 – 2
Charging Valve	230.3 – 1
	240.3 – 4
Cleaner, Air	270.1 – 4
	270.2 – 3
	270.5 – 6
Cleaning:	
Cooler, Lubricating Oil	200.4 – 1
Engine Valves	290.1 – 4
Fuel Injection Valve	250.1 – 1
Pistons	340 – 2
	340.2 – 1
Radiator	160.1 – 1
Temperature Regulators	100.1 – 1
Turbocharger	271 – 6
Clearances and Tolerances	40.1 – 1
Compression Release Mechanism	290.1 – 5
Connecting Rods and Bearings	340 – 3
	340.2 – 2
Cooler, Lubricating Oil	200.2 – 1
Cooler, Lubricating Oil (With Torque Converter)	200.3 – 1
Cooler, Lubricating Oil (With Marine Gear)	200.4 – 1
Cooling System, Radiator	70.2 – 1
Cooling System, Heat Exchanger	80 – 1
Cooling System, Keel Cooling	90 – 1
Core, Radiator	160.1 – 1
Crankshaft	370.1 – 1
Cutaway View	60.1 – 1
Cylinder Head	280.1 – 1
	280.3 – 1
Cylinder Liners	350 – 1

D	
Data, Engine	40.1 – 1
Damper, Vibration	300.1 – 1
Directors, Water	280.1 – 2
	280.3 – 2
Drive:	
Fuel Pump and Governor	260.1 – 1
Oil Pump	190.1 – 4

E	
Engine Data	40.1 – 1
Exhaust Manifold	270.1 – 3
	270.2 – 3
	270.5 – 5
Exhaust Valve	290.1 – 1
Expansion Tank	120 – 1

F	
Fan Group	130.1 – 1
Filters:	
Fuel	240.2 – 3
	240.3 – 3
Oil	210.2 – 1
	210.3 – 1
Turbocharger Oil	210.2 – 2
	210.3 – 2
Flow of Coolant, Radiator	70.2 – 1
Flow of Coolant, Heat Exchanger	80 – 1
Flow of Coolant, Keel Cooling	90 – 1
Flow of Fuel	230.2 – 1
Flow of Fuel (With Torque Converter)	230.3 – 1
Flow of Lubricating Oil	170.1 – 1
Flywheel	390.1 – 1
Front Support	310.1 – 1

	Group	Page
Fuel:		
Bypass	240.2	3
	240.3	4
Filter Housing	240.2	3
	240.3	3
Injection:		
Equipment	250.1	1
Pumps	250.1	2
Pump Housing	250.1	3
Pump Lifters	250.1	4
Valves	250.1	1
System	230.2	1
System (With Torque Converter)	230.3	1
Transfer Pump	240.2	1
Transfer Pump (With Torque Converter)	240.3	1
G		
Gauge:		
Fuel	230.2	1
	230.3	1
Oil	170.1	1
Gear:		
Accessory Gear	260.1	1
	320.1	1
	320.3	1
Camshaft	320.1	3
	320.3	3
Idler	320.1	1
Ring, Flywheel	390.1	1
Timing, Lubrication	170.1	2
Timing, Operation	320.1	1
	320.3	1
Timing Marks	320.1	2
	320.3	2
Governor:		
Adjustments	260.1	9
	260.4	4
Drive	260.1	2
	265	1
Operation and Lubrication	260.1	3
Seals	260.1	4
	260.4	1
H		
Head, Cylinder	280.1	1
	280.3	1
Heat Tube	270.1	2
	270.2	1
High and Low Idle Settings	260.1	9
	260.4	4
Housing:		
Accessory Drive and Governor	260.1	1
Flywheel	390.1	2
Fuel Injection Pumps	250.1	2
Fuel Filter	240.2	3
Fuel Filter (With Torque Converter)	240.3	3
Timing Gear	320.1	5
	320.3	5
I		
Idler Gears	320.1	1
	320.3	1
Ignition System	259	1
	259.1	1
Injection, Fuel	250.1	1
Inlet:		
Manifold	270.1	1
	270.2	1
Valve	290.1	3
L		
Lifters:		
Fuel Injection Pumps	250.1	4
Setting On Engine	250.1	5
Setting Off Engine	250.1	6
Valve	290.1	5
Yoke and Pump Plunger	250.1	7
Line Pressure Regulators	170.5	5
	269	1
	270.7	1
Liners, Cylinder	350	1
Lubricating System	170.1	1
Lubrication:		
Engine	170.1	1
Governor	260.1	3
	260.4	1
Piston and Ring	340	1
	340.2	1
Service Meter	260.1	11
Timing Gear	170.1	2
Turbocharger	271	2
M		
Magneto:	259	1
	259.1	1
Cleaning and Adjustment	259	4
Contact Point Adjustment	259	5
	259.1	4
Contact Point Removal	259	5
	259.1	4
Edge Gap	259	6
	259.1	4
Impulse Coupling	259	3
	259.1	3
Removal and Installation	259	1
	259.1	1
Timing	259	6
	259.1	5
Magneto and Governor Drive	265	1
Main Bearings	360	1
Manifolds:		
Exhaust	270.1	3
	270.2	3
Inlet	270.1	1
	270.2	1
Marks, Timing	320.1	2
	320.3	2
O		
Oil:		
Bypass Valves	210.2	2
Bypass Valves (With Torque Converter)	210.3	2
Cooler, Engine	200.2	1
Cooler (With Torque Converter)	200.3	1
Cooler (With Marine Gear)	200.4	1
Engine Lubrication	170.1	1
Filters	210.2	1
Filters (With Torque Converter)	210.3	1
Pan	180.1	1
Pan, Deep	180.2	1
Pressure	170.1	3
Pressure Regulating Valve	190.1	5
Pump	190.1	1
Pump Drive	190.1	3
Suction Bell	190.1	5
Throwers, Crankshaft	370.1	1

ENGINE
INDEX

	Group	Page
Operating Difficulties:		
Coolant Overheating (Radiator)	70.2	– 1
Coolant Overheating (Heat Exchanger)	80	– 2
Coolant Overheating (Keel Cooling)	90	– 2
Fuel Injection Equipment	250.1	– 1
Fuel System	230.2	– 1
	230.3	– 1
Lubricating System	170.1	– 3
P		
Pan, Oil	180.1	– 1
Pan, Oil Deep	180.2	– 1
Pistons	340	– 1
	340.2	– 1
Piston Pin Bearings	340	– 4
	340.2	– 3
Piston Rings	340	– 2
	340.2	– 2
Precombustion Chambers	280.2	– 2
Pressure Cap, Expansion Tank	120	– 1
Pressure Cap, Radiator	160.1	– 2
Pressure, Oil	170.1	– 3
Pressure Regulating Valve	190.1	– 5
Pulley, Fan	130.1	– 2
Pump:		
Fuel Injection	250.1	– 2
Fuel Transfer	240.2	– 1
	240.3	– 1
Oil	190.1	– 1
Sump	220	– 1
Water, Fresh	140.1	– 1
Water, Raw	150	– 1
R		
Rack Setting	260.1	–10
Radiator	160.1	– 1
Raising Cylinder Liner Ring Ridge	350	– 2
Regulator, Line Pressure	170.5	– 5
	269	– 1
	270.7	– 1
Regulators, Water Temperature	100.1	– 1
Release, Compression	290.1	– 5
Ring Gear, Flywheel	390.1	– 1
Rings, Piston	340	– 2
Rocker Arms, Valve	290.1	– 2
Rod, Connecting	340	– 3
Rotators, Valve	290.1	– 1
Running-in Schedule	340	– 2
Run Out:		
Flywheel	390.1	– 1
Flywheel Housing	390.1	– 4
S		
Screen, Scavenger Pump	190.1	– 5
Seals, Governor	260.1	– 4
Seals, Liner	350	– 1
Seals, Fresh Water Pump	140.1	– 2
Seals, Raw Water Pump	150	– 1
Service Meter	260.1	–11
	265	– 3
Setting Fuel Pump Lifter	250.1	– 5
Shaft, Fuel Pump and Governor Drive	260.1	– 2
Spark Plugs	259	– 1
	259.1	– 1
Spark Plug Adapters	280.3	– 2
	259	– 8
	259.1	– 6
Specifications	40.1	– 1
Springs:		
Governor	260.1	– 3
Valve	290.1	– 3
Strainer, Turbocharger	271	– 3
Suction Bell	190.1	– 5
Sump Pump	220	– 1
Support, Front	310.1	– 1
T		
Tank, Expansion	120	– 1
Testing Temperature Regulators	100.1	– 1
Throwers, Crankshaft	370.1	– 1
Timing:		
Engine Gears	320.1	– 1
Engine Valves	290.1	– 5
Fuel Injection	250.1	– 8
Magneto	259	– 6
	259.1	– 5
Timing Gears	320.1	– 3
	320.3	– 2
Timing Marks	320.1	– 2
	320.3	– 2
Tolerances	40.1	– 1
Transfer Pump, Fuel	240.1	– 1
Transformers, Ignition	259	– 7
	259.1	– 6
Turbocharger	271	– 1
Turbocharger Oil Filter	210.2	– 2
	210.3	– 2
Turbocharger Removal	270.1	– 2
	270.2	– 2
V		
Valve:		
Bypass, Fuel	240.2	– 2
	240.3	– 3
Bypass, Oil	210.2	– 2
	210.3	– 2
Charging, Torque Converter	230.3	– 1
	240.3	– 4
Fuel Injection	250.1	– 1
Inlet and Exhaust	290.1	– 1
Inspection and Reconditioning	290.1	– 4
Mechanism	290.1	– 1
Pressure Regulating, Oil	190.1	– 5
Rocker Arms	290.1	– 2
Rotators	290.1	– 1
Seats	290.1	– 4
Seat Specifications	290.1	– 4
Springs	290.1	– 1
Stem Bushings	290.1	– 5
Timing	290.1	– 5
Vibration Damper	300.1	– 1
W		
Water:		
Directors, Seals and Ferrules	280.1	– 2
Pump, Fresh	140.1	– 2
Pump, Raw	150	– 1
Temperature Regulator	100.1	– 1

ENGINE
SPECIFICATIONS

See the SPECIFICATIONS, in the GENERAL INSTRUCTIONS

Number of cylinders	6
Bore and stroke	6¼" x 8"
Firing order	1-5-3-6-2-4

Camshaft

Backlash between camshaft drive gear and camshaft idler gear	.003 - .017 in.
Bearing journal diameter	2.619 - 2.620 in.
Bearing clearance	.0035 - .007 in.
Permissible bearing clearance	.010 in.
End clearance	.008 - .012 in.
Permissible end clearance	.025 in.
Camshaft retaining nut torque	300 lb. ft.

Camshaft Idler Gear

Backlash between camshaft idler gear and accessory drive shaft gear	.003 - .017 in.
Shaft diameter	1.874 - 1.875 in.
Bearing clearance	.002 - .004 in.
Permissible bearing clearance	.008 in.

Cluster Idler Gear

Bearing diameter	1.7338 - 1.7344 in.
Bearing clearance	.004 - .006 in.
Permissible bearing clearance	.010 in.
Backlash between cluster idler gear and camshaft idler gear	.003 - .017 in.

Connecting Rod

Connecting rod bearing clearance	.0053 - .0078 in.
Permissible bearing clearance	.012 in.
Connecting rod bolt nuts, torque	190 lb. ft.
Center-to-center distance	14.999 - 15.001 in.
Bore in piston pin bearing	2.4510 - 2.4516 in.

Crankshaft

Main journal diameter	4.624 - 4.625 in.
Permissible main journal wear	.010 in.
Main bearing clearance	.0054 - .0081 in.
Permissible bearing clearance	.012 in.
End clearance	.012 - .019 in.
Permissible end clearance	.035 in.
Main bearing stud nuts, torque	445 lb. ft.
Connecting rod journal diameter	4.124 - 4.125 in.
Permissible journal wear	.010 in.
Permissible out-of-roundness (journal)	.007 in.
Permissible run-out on thrower ring groove face (front and rear)	.006 in.

Cylinder Block

Main bearing original bore dimension	5.1240 - 5.1250 in.

Cylinder Head

Tighten nuts in sequence shown in illustration.

Initial	180 lb. ft.
Final	300 lb. ft.

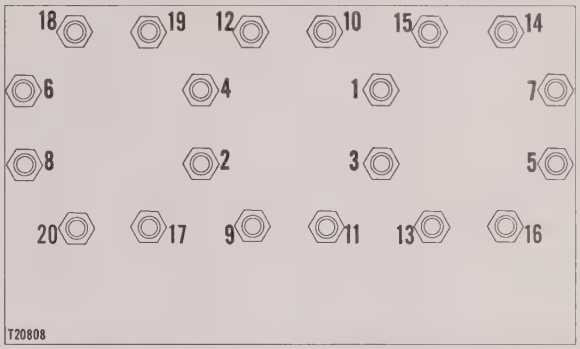

CYLINDER HEAD STUD NUT TIGHTENING SEQUENCE

Cylinder Liner (Use 6H4141 Adapter Plate for Removal)

Inside diameter	6.250 - 6.251 in.
Permissible liner wear (Increase in diameter at top of ring travel)	.020 in.
Liner flange thickness	.504 - .506 in.
Counterbore dimension in block	.498 - .500 in.

Flywheel

Retaining bolt torque	210 - 250 lb. ft.
Thrower:	
Location (distance from front face of crankshaft front flange)	1.263 - 1.273 in.
Location (rear)	Tight against shoulder on crankshaft
Permissible run-out (front and rear)	.006 in.
Oil ring side clearance:	
Front	.0033 - .0041 in.
Rear	.0025 - .0040 in.
Oil ring gap (front and rear)	.010 - .015 in.

Flywheel Housing

Bolt torque	60 - 70 lb. ft.

Fuel Injection Equipment

Fuel injection pump timing (before top center)	
Earlier	8°
Later	12°
Fuel injection pump lifter setting (on engine with piston at top center)	
Earlier	2.114 ± .004 in.
Later	2.0899 ± .004 in.
Fuel injection pump lifter setting (off engine)	2.156 ± .001 in.*
Fuel pump plunger length	
Earlier	2.9835 - 2.9837 in.
Later	2.9831 - 2.9837 in.
Permissible wear (decrease in length of plunger)	.005 in.*
Injection nozzle orifice	
Earlier	.0325 - .0330 in.
Later	.038 in.
Drill part number to use for cleaning nozzle orifice	
Earlier	6H8639
Later	8M4813

Injection valve retaining nut torque 100 - 110 lb. ft.*
Camshaft bearing journal diameter ..... 2.442 - 2.443 in.*
Camshaft bearing clearance ..... .002 - .004 in.*
Permissible bearing clearance ..... .006 in.*
Rack bearing journal diameter ... .609 - .610 in.*
Rack bearing clearance ..... .002 - .004 in.*
Permissible bearing clearance ..... .006 in.*
Camshaft retaining nut torque .... 35 - 45 lb. ft.*
*Earlier and Later

LIFTER SETTINGS IN DEGREES (OFF ENGINE)		
Lifter No. (numbered consecutively front to rear)	Timing Plate Degrees	
	Earlier	Later
1	8	10
2	128	130
3	248	250
4	68	70
5	308	310
6	188	190

Fuel Injection Pump and Governor Drive Shaft

Backlash between fuel injection pump and governor drive shaft gear and camshaft idler gear ..... .003 - .010 in.
End clearance ..... .008 - .012 in.
Permissible end clearance ..... .025 in.
Gear retaining nut torque ..... 240 - 260 lb. ft.
Drive coupling bolt torque ..... 60 lb. ft.

Fuel Transfer Pump

Clearance between gears and covers, total
Earlier ..... .001 - .0025 in.
Later ..... .0008 - .0020 in.
Bearing size, insider diameter
Earlier ..... .477 - .480 in.
Later ..... .4950 - .4956 in.
Bearing clearance ..... .001 - .002 in.*
Permissible bearing clearance ..... .005 in.*
*Earlier and Later

Governor

Backlash between drive gear and driven gear ..... .002 - .006 in.
Bearing bore diameter (for pinion drive gear) ..... .9370 - .9380 in.
Pinion bearing area diameter .... .9356 - .9360 in.
Permissible bearing clearance ..... .008 in.
Carburetor control shaft (Natural gas models only) ..... .4996 - .5000 in.
Governor rack lever shaft ..... .4996 - .5000 in.
Lever assembly bearings ..... .5019 - .5025 in.
Spindle shaft diameter (below weight) ..... .7490 - .7496 in.
Spindle assembly bearing ..... .7504 - .7510 in.
Spindle assembly pin diameter .. .3126 - .3129 in.
Weight assembly pin diameter .. .3126 - .3129 in.
Weight assembly roller diameter .. .748 - .750 in.
Spring retainer bearing ..... .746 - .748 in.

Natural Gas Models

Backlash between bevel gear and magneto drive pinion ..... .000 - .009 in.
Direction of magneto rotation . counterclockwise
Impulse coupling nut torque (American Bosch Magneto) ..... 20 lb. ft.
Magneto contact point clearance ..... .017 in.
Spark plug gap ..... .013 in.
Spark plug torque ..... 30 lb. ft.
Spark plug adapter torque (steel) ..... 225 lb. ft.
Spark plug adapter torque (Brass) ..... 150 lb. ft.
Timing:
Natural gas (methane - dry):
10:1 compression ratio NA* (before top center) ..... 25°
10:1 compression ratio TA* (before top center) ..... 17½°**
7:1 compression ratio NA* (before top center) ..... 30°
7:1 compression ratio TA* (before top center) ..... 30°***
Wet natural gas or butane:
7:1 compression ratio NA* (before top center) ..... 20°
Propane:
10:1 compression ratio NA* (before top center) ..... 12½°
Line pressure regulator differential pressure (value A) in inches of water:
Earlier with Ensign Carburetor ..... 7 - 10
Later with Impco Carburetor 5½
*NA—Naturally Aspirated
TA—Turbocharged and Aftercooled
**90° maximum temperature of water to the aftercooler
***130° maximum temperature of water to the aftercooler

Oil Pump

Clearance between gears and end covers ..... .002 - .004 in.
Shaft diameter ..... 1.2275 - 1.2280 in.
Bearing bore ..... 1.2300 - 1.2310 in.
Permissible bearing clearance ..... .005 in.

Piston Pins

Clearance in rod bearing
Earlier ..... .001 - .0018 in.
Later ..... .0010 - .0019 in.
Permissible clearance in rod ..... .006 in.*
Clearance in piston ..... .0004 - .0010 in.*
Permissible clearance in piston ..... .006 in.*
*Earlier and Later

Piston Rings

Piston ring side clearance:
Top ring
Earlier ..... .0050 - .0061 in.
Later ..... .0050 - .0062 in.
Second ring ..... .0030 - .0046 in.*
Third ring (Earlier only) ..... .0030 - .0046 in.
Oil control ring ..... .0015 - .0031 in.*
Permissible clearance (top compression ring) ..... .012 in.*
Ring gap, top ..... .025 - .034 in.

Ring gap, intermediate
Earlier ..... .017 - .030 in.
Later ..... .023 - .036 in.
Ring gap, oil control ..... .017 - .030 in.*
*Earlier and Later

Precombustion Chamber

Torque
Earlier ..... 250 lb. ft.
Later ..... 225 lb. ft.

Rocker Arm Bearings

Clearance between shaft and bearing
Earlier ..... .003 - .005 in.
Later ..... .0015 - .0035 in.
Permissible clearance
Earlier ..... .008 in.
Later ..... .006 in.

Service Meter

Bearing bore diameter
Earlier ..... .4955 - .4965 in.
Later ..... .5555 - .5565 in.
Permissible bearing clearance
Earlier ..... .012 in.
Later ..... .012 in.

Timing Gear Housing

Bolt torque ..... 60 - 70 lb. ft.

Turbocharger (AiResearch—Shrouded impeller-split main housing)

Torque on main housing bolts and nuts ..... 25 - 30 lb. ft.
Torque on impeller housing stud nuts ..... 13 - 17 lb. ft.
Torque on turbine housing bolts nuts 25 - 30 lb. ft.
Torque on shroud bolt nuts ..... 3 - 4 lb. ft.
Clearance between turbine and turbine housing ..... .019 - .029 in.

Turbocharger (AiResearch—Open impeller-single piece main housing)

Torque on turbine housing stud nuts ..... 25 - 29 lb. ft.
Torque on compressor housing bolts 12 - 17 lb. ft.
Torque on diffuser plate stud nuts .. 12 - 17 lb. ft.
Torque on nozzle retaining bolts ..... 7 - 7.5 lb. ft.
Torque on thrust plate bolts ..... 7 - 9 lb. ft.
Torque on impeller nut (hot) ..... 30 - 35 lb. ft.
Torque on impeller nut (cold) ..... 40 - 45 lb. ft.
Clearance between turbine wheel and turbine housing ..... .019 - .029 in.
Clearance between impeller and compressor housing ..... .010 - .015 in.
End clearance ..... .005 - .010 in.
Permissible end clearance ..... .012 in.
Permissible bearing clearance (satisfactory if compressor wheel and/or turbine wheel have not rubbed housing or housings)
Bearing diameter (ID) .8018 - .8022 in.
Bearing diameter (OD)
* Earlier ..... .9790 - .9795 in.
Later ..... .9780 - .9785 in.
Journal diameter ..... .7997 - .8000 in.
Housing bore diameter ..... .9830 - .9835 in.
Minimum thickness of thrust ring ..... .158 in.
Minimum thickness of inboard thrust washer ..... .090 in.
Minimum thickness of outboard thrust washer ..... .091 in.
Oil ring seal gap ..... .001 - .006 in.
Mounting bolts (turbocharger-to-manifold) ..... 36 - 44 lb. ft.

*For more satisfactory bearing clearance, the earlier bearing (2M2565) can be replaced by the later one (5M1786).

Turbocharger (Schwitzer - 4D)

Torque on turbine housing and compressor cover band clamp bolts ... 10 lb. ft.
Torque on compressor back plate-to-bearing housing bolts ..... 17 lb. ft.
Torque on impeller nut (cold) ..... 30 lb. ft.
Clearance between impeller and compressor back plate (with shaft pushed toward impeller end) ..... .020 - .022 in.
End clearance ..... .004 - .006 in.
Permissible end clearance ..... .008 in.
Bearing diameter (ID) ..... .6880 - .6883 in.
Bearing diameter (OD) ..... 1.0585 - 1.0590 in.
Permissible bearing clearance (Satisfactory if compressor wheel and/or turbine wheel have not rubbed housing or housings.)
Journal diameter ..... .6862 - .6865 in.
Housing bore diameter ..... 1.0625 - 1.0630 in.
Thickness of thrust bearings ..... .025 - .026 in.
Thickness of thrust rings ..... .099 - .100 in.
Width of groove in sleeve ..... .128 - .130 in.
Side clearance in groove of sleeve with two piston rings installed side by side ..... .002 - .006 in.
Minimum piston ring width ..... .062 in.
Maximum piston ring groove width (turbine) ..... .068 in.
Mounting bolts (turbocharger-to-manifold) ..... 36 - 44 lb. ft.

Valves

Exhaust valves:
Clearance (hot)
Earlier ..... .025 in.
Later ..... .030 in.
Inlet valves:
Clearance (hot)
Earlier ..... .025 in.
Later ..... .018 in.

Valve Lifters

Lifter diameter ..... .9960 - .9970 in.
Bore diameter ..... .9990 - 1.000 in.
Permissible clearance ..... .008 in.

Valve Spring

Outer:
Pounds force
Earlier ..... 50 - 55
Later ..... 50.8 - 56.1
When compressed to ..... 1.953 in.*
Inner:
Pounds force ..... 27 - 30*
When compressed to ..... 1.922 in.*
*Earlier and Later

Valve and Valve Seat Specifications

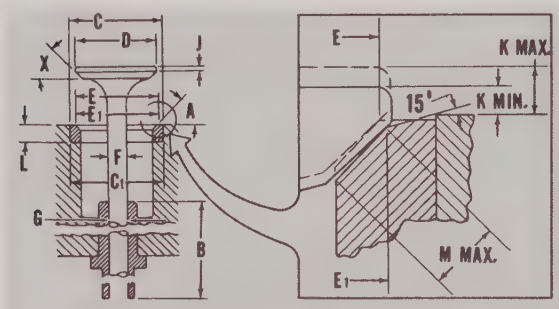

VALVE AND VALVE SEAT SPECIFICATIONS

A–Valve seat angle. B–Valve guide length. C–Valve seat insert diameter. C_1–Bore for valve seat insert. D–Valve head diameter. E–Outside diameter of valve seat face (new). E_1–Outside diameter of valve seat face [After reconditioning (MAX.)]. F–Stem diameter. G–Valve guide bore. J–Valve lip thickness. K–Measurement from top of valve to face of head with valve seated. L–Depth of bore for valve seat inserts. M–Valve seat width. X–Valve face angle.

T72421

	INLET	EXHAUST
A	30°	30°
B	5.062	5.062
C	Earlier 2.5735" - 2.5745" Later 2.5895" - 2.5905"	Earlier 2.4175" - 2.4185" Later 2.4345" - 2.4355"
**C_1	Earlier 2.5705" - 2.5715" Later 2.586" - 2.587"	Earlier 2.4145" - 2.4155" Later 2.431" - 2.432"
D	2.500" - 2.510"	2.345" - 2.355"
E	2.457"	2.302"
E_1	2.480" MAX.	2.325" MAX.
F	.4950" - .4960"	.4950" - .4960"
*G	Earlier .499" - .500" Later .4985" - .5005"	Earlier .499" - .500" Later .5000" - .5020"
J	.140" MIN.	.124" MIN.
K	.119" MIN. - .165" MAX.	.104" MIN. - .165" MAX.
L	Earlier .508" - .510" Later .6355" - .6375"	Earlier .508" - .510" Later .6355" - .6375"
†M	.073" MAX.	.072" MAX.
X	29¼°	29¼°

*Measure valve guide bore in portion of guide which is pressed into cylinder head closest to valve head.

**Earlier head assemblies can be reworked to accept later (larger) valve inserts by machining to later (C_1) and later (L) dimensions.

†If valve seat face exceeds the maximum width after grinding, narrow the seat face by using a 15° stone or fly cutter.

Maximum permissible stem clearance in valve guide ..... Inlet .009 in.
Exhaust .009 in.

Valve Timing

With valve clearances set correctly hot, dial indicator mounted above valve stem, readings taken with valve .075" off its seat:

Earlier:
- Exhaust opens (before bottom center) .. 31¾°
- Exhaust closes (before top center) ..... 0°
- Inlet opens (after top center) ..... 5¼°
- Inlet closes (after bottom center) ..... 13°

Later:
- Exhaust opens (before bottom center) ... 31° 6′
- Exhaust closes (before top center) ..... 0° 35′
- Inlet opens (after top center) ..... 4° 15′
- Inlet closes (after bottom center) ..... 14° 10′

Vibration Damper

Bolt torque ..... 210 - 250 lb. ft.

Water Pump (Fresh and Raw)

Clearance between impeller and housing ..... .005 - .020 in.
Impeller retaining nut torque ..... 55 lb. ft.

Water Temperature Regulator

Opening temperature for testing
- Earlier ..... 174° - 170° F.
- Later ..... 164° - 166° F.

Fully open temperature for testing approximately
- Earlier ..... 186° F.
- Later ..... 180° F.

ENGINE

CUTAWAY VIEW

ISSUED 2-58

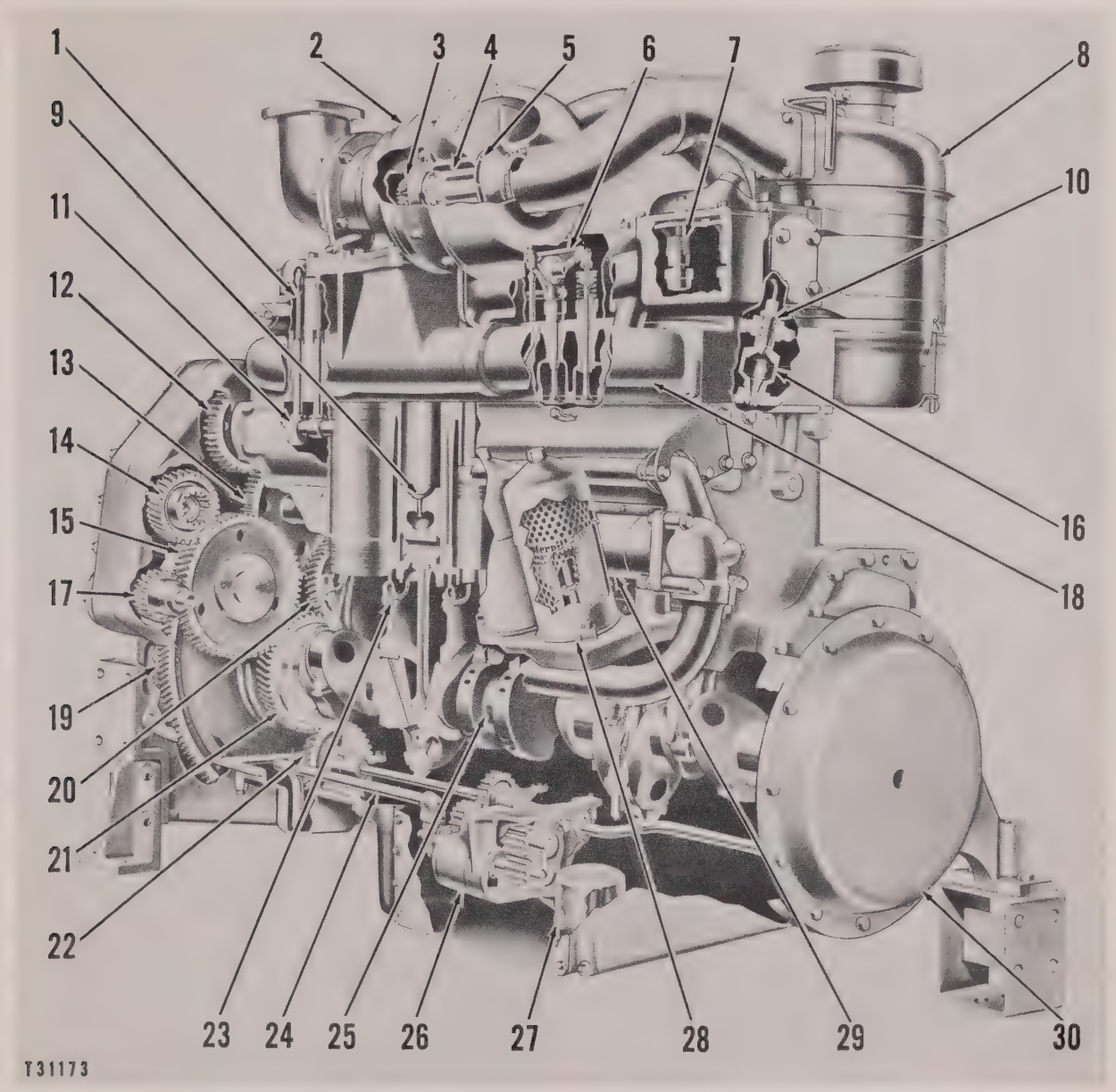

ENGINE (CUTAWAY VIEW)

1–Valve lifter. 2–Turbocharger. 3–Turbine wheel (part of rotating cartridge). 4–Rotating cartridge. 5–Impeller (part of rotating cartridge). 6–Valve rocker arm. 7–Water temperature regulator. 8–Air cleaner. 9–Heat plug. 10–Fuel injection valve. 11–Camshaft. 12–Camshaft gear. 13–Camshaft idler gear. 14–Water pump drive gear. 15–Idler gear. 16–Precombustion chamber. 17–Generator drive gear. 18–Exhaust manifold. 19–Ring gear. 20–Idler gear. 21–Crankshaft gear. 22–Oil pump drive gear. 23–Spray tube. 24–Scavenger tube. 25–Crankshaft. 26–Oil pump. 27–Suction bell. 28–Oil filter. 29–Oil cooler. 30–Damper guard.

Cooling System

FLOW OF COOLANT
(With Radiator)

The coolant is delivered into the engine oil cooler **(9)** and the tube **(10)**, under pressure from the discharge side of the water pump **(11)**. After passing through the engine oil cooler and the tube, the coolant enters the diesel engine cylinder block **(6)**. The coolant circulates around the cylinder liners.

A portion of the coolant is transmitted into the starting engine **(8)** and cools the starting engine cylinder block and the cylinder head. This coolant then passes into the cylinder head of the diesel engine. When the starting engine is running, warm water is discharged into the diesel engine cooling system to facilitate starting the diesel engine.

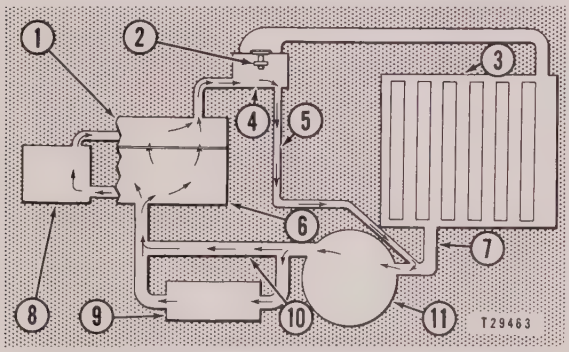

FLOW OF COOLANT – REGULATORS CLOSED
(Schematic)
1–Cylinder head. 2–Regulator. 3–Radiator. 4–Water manifold. 5–By-pass line. 6–Cylinder block. 7–Water return line. 8–Starting engine. 9–Engine oil cooler. 10–Tube. 11–Water pump.

The greater portion of the coolant passes directly from the cylinder block **(6)** through the water seals, ferrules and water directors into the cylinder head **(1)**. The coolant flows from the cylinder head into the water manifold **(4)** and contacts the water temperature regulators **(2)**.

On initial starting, the temperature of the coolant is usually not high enough to open the water temperature regulators, which remain closed until the engine coolant is at operating temperature. In this case, none of the coolant passes through the regulators to be admitted to the radiator **(3)** to be cooled, thus assuring rapid warm-up.

All of the coolant passes through the by-pass line **(5)** and returns to the suction side of the water pump through the return line **(7)**, to again be delivered through the system. Thus the circuit is completed with the regulators in the closed position.

When the coolant is at operating temperature, the regulators open. The coolant flows through the regulators **(2)** into the radiator **(3)** to be cooled, and returns to the suction side of the water pump through the radiator and the return line **(7)**. A small portion of the coolant passes through the by-pass line **(5)** at all times and returns to the water pump, to complete the flow circuit when the regulators are open.

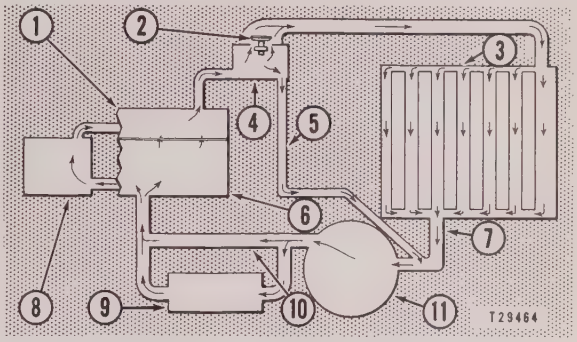

FLOW OF COOLANT – REGULATORS OPEN
(Schematic)
1–Cylinder head. 2–Regulator. 3–Radiator. 4–Water manifold. 5–By-pass line. 6–Cylinder block. 7–Water return line. 8–Starting engine. 9–Engine oil cooler. 10–Tube. 11–Water pump.

OVERHEATING

If difficulty is experienced with the engine overheating, check the following possible causes:

1. Coolant Level.
   Insufficient coolant in the cooling system. If the coolant level has been allowed to fall so low that the coolant is no longer circulating, the engine should be stopped immediately and allowed to cool before adding coolant. If there is still good circulation, add makeup coolant slowly while the engine is running. These precautions will minimize the possibility of cracking of the cylinder heads.

2. Fan.
   Loose fan belts.

3. Radiator Clogging — (External)
   Accumulation of leaves, mud and debris around the radiator core. In some cases, these accumulations can be removed by flushing with water or compressed air from the back of the radiator. It may become necessary, eventually, to remove the radiator guard to clean the cores effectively.

4. Water Temperature Regulators.
   Failure of water temperature regulators to open. Check the regulators for opening temperature as described in the topic, TESTING TEMPERATURE REGULATOR. Observe the amount of scale deposited on the regulator. Too much scale will obstruct operation. The engine should not be operated with the regulators removed.

5. Water Pump.
   A badly corroded or worn water pump impeller or impeller loose on the shaft.

6. Internal Clogging.
   Excessive scale or sediment deposits in the radiator, lines, cylinder head or block. Such deposits can cause serious damage to the engine, by retarding the transfer of heat from the head and cylinders to the coolant. In such cases, the coolant temperature may not be above normal. However, loose scale and sediment may deposit in water passages to such an extent that circulation will be retarded, in which case the coolant temperature may go above normal.
   To check for lime and scale in the cooling system, remove one of the precombustion chambers and inspect the surface which comes in contact with the coolant. To remove hard scale, follow the directions in accordance with the Operation and Maintenance Instructions.

7. Continuous Overload.
   Operating an engine at full throttle under a continuous overload, which lugs the engine speed down below its rated speed, may also cause overheating. As a correction, the load on the engine should be reduced.

8. Altitude.
   The altitude at which the engine is operating should be considered when overheating is encountered. The horsepower of the engine is decreased as the altitude increases. Also, the boiling point of water is lower at higher altitudes.

9. Water Temperature Indicator.
   It may be that the indicator is not registering correctly. If the indicator is suspected of giving a false reading, install a new one and check the reading.

Cooling System
(Radiator)

The coolant is circulated by the water pump **(8)** through the aftercooler **(2)** and engine oil cooler **(10)** to the cylinder block **(9)**. The coolant passes from the engine oil cooler through the torque converter oil cooler before entering the cylinder block, on engines equipped with a torque converter. The gasoline starting engine, on engines so equipped, mounts on the left side of the diesel engine and receives its coolant from the diesel engine cooling system. That portion of the coolant which enters the diesel engine cylinder block **(9)** passes through the cylinder heads **(1)** and **(4)** and into the water manifold **(3)**.

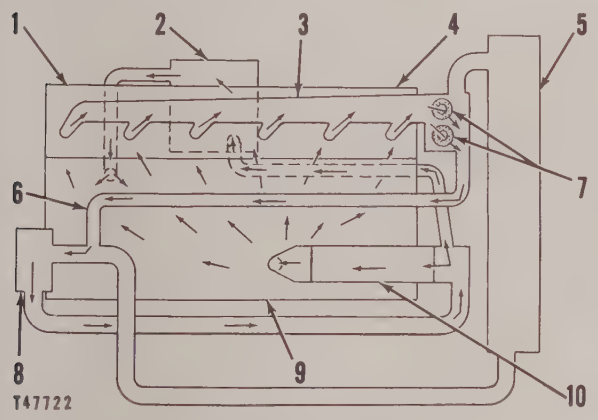

FLOW OF COOLANT
(Regulators Closed)
1–Cylinder head. 2–Aftercooler. 3–Water manifold. 4–Cylinder head. 5–Radiator. 6–By-pass line. 7–Regulators. 8–Water pump. 9–Cylinder block. 10–Engine oil cooler.

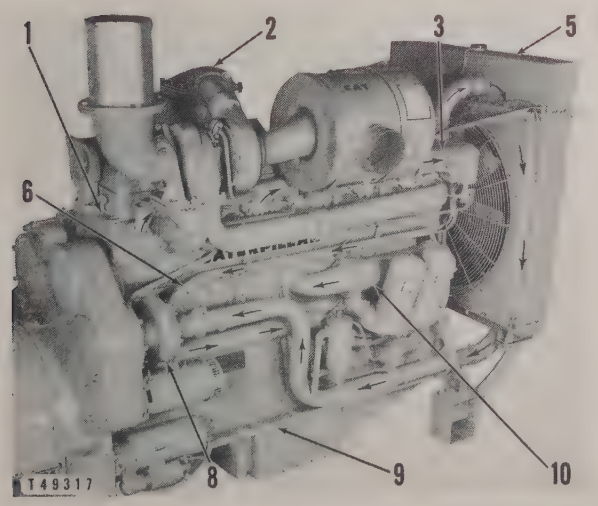

FLOW OF COOLANT
1–Cylinder head. 2–Aftercooler. 3–Water manifold. 5–Radiator. 6–By-pass line. 8–Water pump. 9–Cylinder block. 10–Engine oil cooler.

On initial starting, the temperature of the coolant is usually not high enough to open the regulators **(7)**. Therefore, the coolant which enters the right side of the regulator housing must pass through the regulators into the left side of the housing. The coolant is then directed through the by-pass line **(6)** back to the inlet side of the water pump thereby eliminating the radiator **(5)** from the system and assuring rapid warm-up.

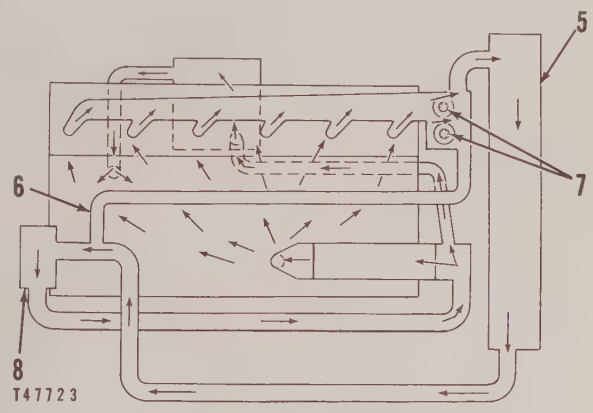

FLOW OF COOLANT
(Regulators Open)
5–Radiator. 6–By-pass line. 7–Regulators. 8–Water pump.

When the coolant has reached the operating temperature, the regulators **(7)** open allowing the coolant to flow through the center section of the regulator housing and to the radiator **(5)** to be cooled. The coolant flows from the radiator back to the water pump **(8)** where the circulation cycle is repeated. When the regulators are fully open, the flow through the by-pass line **(6)** is sealed off, thereby routing the entire capacity of the cooling system through the radiator. See the topic, WATER TEMPERATURE REGULATOR, for further information on regulator function.

OVERHEATING

If difficulty is experienced with the engine overheating, check the following possible causes:

1. Coolant Level.
   Insufficient coolant in the cooling system. If the coolant level has been allowed to fall so low that the coolant is no longer properly circulating, the engine should be stopped immediately and allowed to cool before adding coolant. If there is still good circulation, add make-up coolant slowly while the engine is running. These precautions will minimize the possibility of cracking the cylinder head.

2. Fan.
   Loose fan belt.

3. Radiator Clogging — (External)
   Accumulation of leaves, mud and debris in and around the radiator core. In some cases, these accumulations can be removed by flushing with water or compressed air from the back of the radiator. It may become necessary, eventually, to remove the radiator to clean the core effectively.

4. Water Temperature Indicator.
   It may be that the indicator is not registering correctly. If the indicator is suspected of giving a false reading, install a new one and check the reading.

5. Water Temperature Regulators.
   Water temperature regulators fail to open. Check the regulators for opening temperature as described in the topic, TESTING TEMPERATURE REGULATOR. Observe the amount of scale deposited on the regulator. Too much scale will obstruct operation. The engine should not be operated with the regulators removed.

6. Water Pump.
   A badly corroded or worn water pump impeller, or impeller loose on the shaft.

7. Internal Clogging.
   Excessive scale or sediment deposits in the oil cooler, cylinder head or block. Such deposits can cause serious damage to the engine, by retarding the transfer of heat from the head and cylinders to the coolant. In such cases, the water temperature may not be above normal. However, loose scale and sediment may deposit in water passages to such an extent that circulation will be retarded, in which case the water temperature may go above normal.

   To check for lime and scale in the cooling system, remove one of the precombustion chambers and inspect the surface which comes in contact with the coolant. To remove hard scale, follow the directions in accordance with the Operation and Maintenance Instructions.

8. Continuous Overload.
   Operating an engine at a continuous overload, which lugs the engine speed down below its rated speed, may also cause overheating. As a correction, the load should be reduced to allow the engine to operate at rated speed.

9. Altitude.
   The altitude at which the engine is operating should be considered when boiling is encountered. The horsepower of the engine is decreased as the altitude increases. Also, the boiling point of water is lower at higher altitudes.

10. Overheating can also be caused by combustion gases escaping by the precombustion chamber gaskets or cylinder head gaskets and water ferrules and seals. The gases can accumulate in the cylinder head and block or restrict the flow of coolant through the cooling system. Thus, the coolant temperature rises rapidly and hot spots will exist in the cylinder head. The easiest method of checking for this condition is to carefully remove the filler cap and check for air bubbles. If air bubbles are present in the cooling system, check the precombustion chambers for tightness and, if necessary, replace the gaskets.

Cooling System

(Heat Exchanger-Cooled)

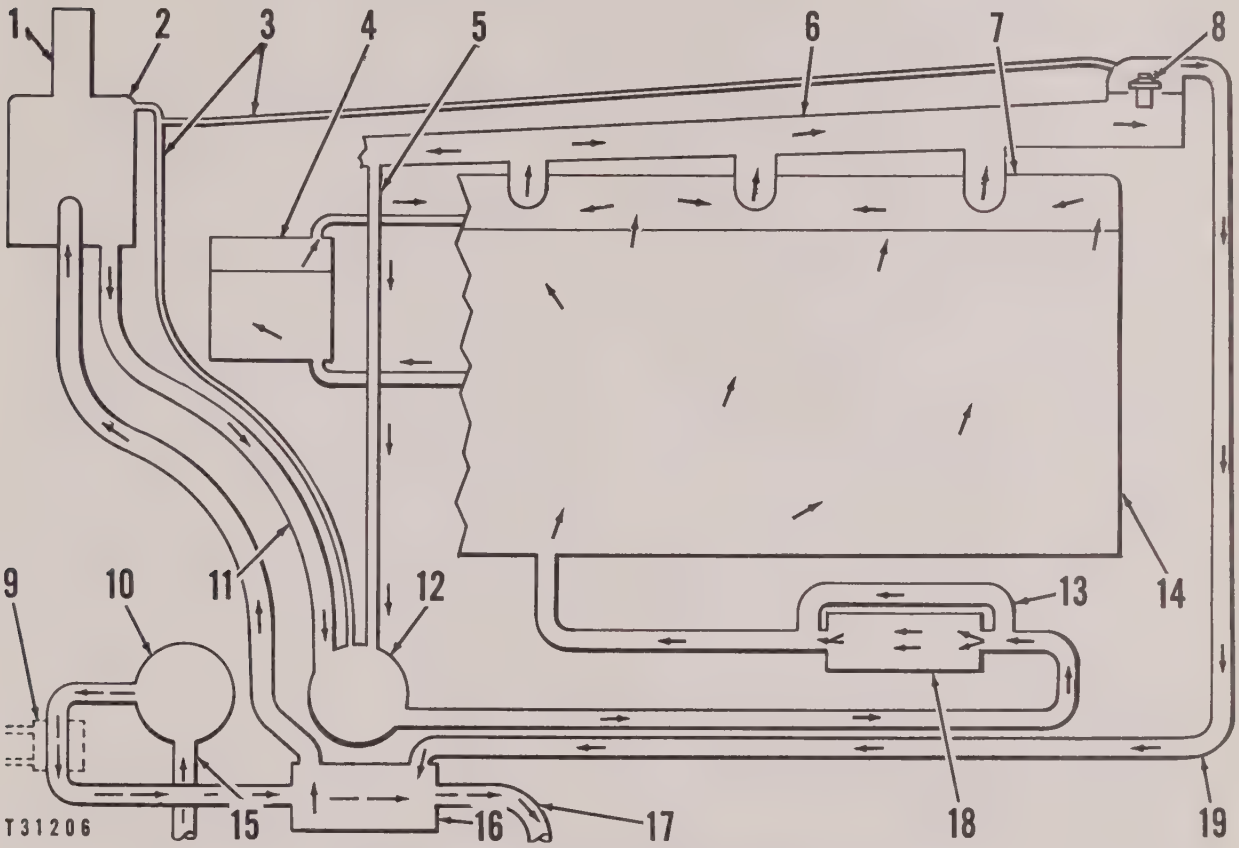

SCHEMATIC DIAGRAM OF HEAT EXCHANGER COOLING WITH REGULATORS OPEN

1–Adapter. 2–Expansion tank. 3–Bleed lines. 4–Starting engine. 5–By-pass line. 6–Water manifold. 7–Cylinder head. 8–Water temperature regulator. 9–Marine gear oil cooler. 10–Raw water pump. 11–Return line. 12–Fresh water pump. 13–Tube. 14–Engine block. 15–Inlet tube. 16–Heat exchanger. 17–Outlet tube. 18–Engine oil cooler. 19–Line.

The flow of fresh water coolant is as follows:

The coolant is delivered to the engine oil cooler **(18)** and tube **(13)** under pressure from the discharge side of the fresh water pump **(12)**. If the engine is equipped with a torque converter oil cooler, this cooler will be located in place of the tube **(13)**. After passing through the engine oil cooler and the tube, the coolant enters the diesel engine cylinder block **(14)**. The coolant circulates around the cylinder liners.

A portion of the coolant is directed into the starting engine **(4)** and cools the starting engine cylinder block and the cylinder head. This coolant then passes into the cylinder head of the diesel engine. When the starting engine is running, warm water is discharged into the diesel engine cooling system to facilitate starting the diesel engine. The greater portion of the coolant passes directly from the cylinder block **(14)** through the water directors into the cylinder head **(7)**. The coolant flows from the cylinder head into the water manifold **(6)** and contacts the water temperature regulators **(8)**.

On initial starting, the temperature of the coolant is usually not high enough to open the water temperature regulators, which remain closed until the engine coolant is at operating temperature. In this case, none of the coolant passes through the regulators to be admitted to the heat exchanger **(16)** to be cooled, thus assuring rapid warm-up. All of the coolant passes through the by-pass line **(5)** and returns to the suction side of the water pump and is delivered through the system again. Thus, the circuit is completed with the regulators in the closed position.

When the coolant is at operating temperature, the regulators open. The coolant flows through the regulators **(8)** into the heat exchanger **(16)** to be cooled,

and returns to the suction side of the water pump through the expansion tank **(2)** and the return line **(11)**. A small portion of the coolant passes through the by-pass line **(5)** at all times, and returns to the water pump to complete the flow circuit when the regulators are open.

The raw water pump **(10)** delivers raw water from the raw water inlet tube **(15)** through the marine gear oil cooler **(9)** (if so equipped), as shown in phantom, and into the heat exchanger **(16)**. The raw water cools the engine coolant by flowing through the tubes in the heat exchanger, and is then discharged through the outlet tube **(17)**.

The expansion tank **(2)**, located between the heat exchanger and the water pump, provides a space for expansion of the coolant, an opening for filling the cooling system, and also eliminates the possibility of air locking. An adapter **(1)** provides a hose connection for an additional expansion tank if desired.

On an engine equipped with a water-cooled exhaust manifold, the exhaust manifold replaces the water manifold **(6)**. The water jacket of the exhaust manifold serves as a passage from the engine block to the water by-pass line **(5)** to the line **(19)** to the heat exchanger **(16)**, in the same capacity as the water manifold on engines without the water-cooled exhaust manifold. The water-cooled exhaust manifold also encloses the water temperature regulator compartment. Because of the sensitivity of the temperature regulators and the variations in temperature in areas of the water-cooled exhaust manifold, a means has been provided to maintain a more stable operation of the temperature regulators. A tube from the inlet elbow of the engine oil cooler to the temperature regulator compartment delivers a stream of coolant around the temperature regulators and provides a more stable coolant temperature variation acting on the temperature regulators.

The bleed lines **(3)** provide a means of escape for any air or water vapor that might collect in the regulator compartment or the water pump.

OVERHEATING

If difficulty is experienced with the engine overheating, check the following possible causes:

1. Coolant Level.
   Insufficient coolant in the cooling system. If the coolant level has been allowed to fall so low that the coolant is no longer properly circulating, the engine should be stopped immediately and allowed to cool before adding coolant. If there is still good circulation, add make-up coolant slowly while the engine is running. These precautions will minimize the possibility of cracking the cylinder heads.
2. Raw Water.
   Insufficient raw water. Excessive scale or sediment deposits in the inlet and outlet lines will reduce the amount of raw water available to cool the engine coolant. Partially closed valves will also restrict the flow of raw water to the heat exchanger.
3. Water Temperature Regulators.
   Failure of water temperature regulators to open. Check the regulators for opening temperature as described in the topic, TESTING TEMPERATURE REGULATORS. Observe the amount of scale deposited on the regulators. Too much scale will obstruct operation. The engine should not be operated with the regulators removed.
4. Water Pump.
   A badly corroded, worn or loose water pump impeller.
5. Raw Water Pump.
   A badly corroded pump body or worn water pump impeller.
6. Internal Clogging.
   Excessive scale or sediment deposits in the heat exchanger, cylinder head or block. Such deposits can cause serious damage to the engine, by retarding the transfer of heat from the head and cylinders to the coolant. In such cases, the water temperature may not be above normal. However, loose scale and sediment may deposit in water passages to such an extent that circulation will be retarded, in which case the water temperature may go above normal.
   To check for lime and scale in the cooling system, remove one of the precombustion chambers and inspect the surface which comes in contact with the coolant. To remove hard scale, follow the directions in accordance with the Operation and Maintenance Instructions.
7. Continuous Overload.
   Operating a machine at full throttle under a continuous overload, which lugs the engine speed down below its rated speed, may also cause overheating. As a correction, the load should be reduced to allow the engine to operate at rated speed.
8. Altitude.
   The altitude at which the machine is operating should be considered when overheating is encountered. The horsepower of the engine is

decreased as the altitude increases. Also, the boiling point of water is lower at higher altitudes.

9. Water Temperature Indicator.

   It may be that the indicator is not registering correctly. If the indicator is suspected of giving a false reading, install a new one and check the reading.

10. Overheating can also be caused by combustion gases escaping by the precombustion chamber gaskets, or, cylinder head gaskets and water ferrules and seals. The gases can accumulate in the cylinder head and block or restrict the flow of coolant through the cooling system. Thus, the coolant temperature rises rapidly and hot spots will exist in the cylinder head. The easiest method of checking for this condition is to carefully remove the filler cap and check for air bubbles. If air bubbles are present in the cooling system, check the precombustion chambers for tightness and, if necessary, replace the gaskets.

Cooling System
(Heat Exchanger-cooled)

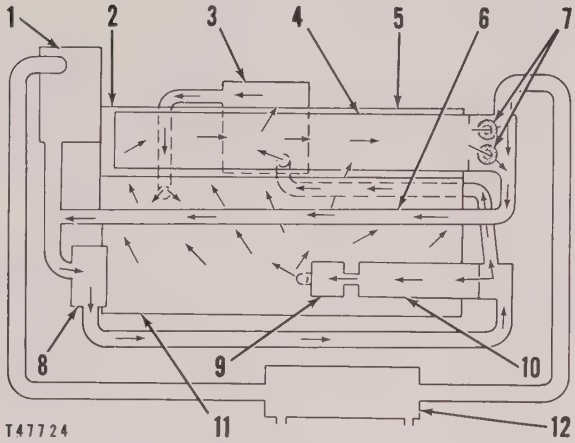

FLOW OF COOLANT
(Regulators Closed)

1–Expansion tank.
2–Cylinder head.
3–Aftercooler.
4–Water and exhaust manifold.
5–Cylinder head.
6–By-pass line.
7–Regulators.
8–Water pump.
9–Marine gear oil cooler or torque converter oil cooler.
10–Engine oil cooler.
11–Cylinder block.
12–Heat exchanger.

The flow of fresh water coolant is as follows: The coolant is circulated by the water pump **(8)** through the aftercooler **(3)**, engine oil cooler **(10)** and marine gear oil cooler **(9)** (or torque converter oil cooler on industrial engines so equipped) to the cylinder block **(11)**. The gasoline starting engine, on engines so equipped, mounts on the left side of the diesel engine and receives its coolant from the diesel engine cooling system. That portion of the coolant which enters the diesel engine cylinder block **(11)** passes through the cylinder heads **(2)** and **(5)** and into the water and exhaust manifold **(4)**.

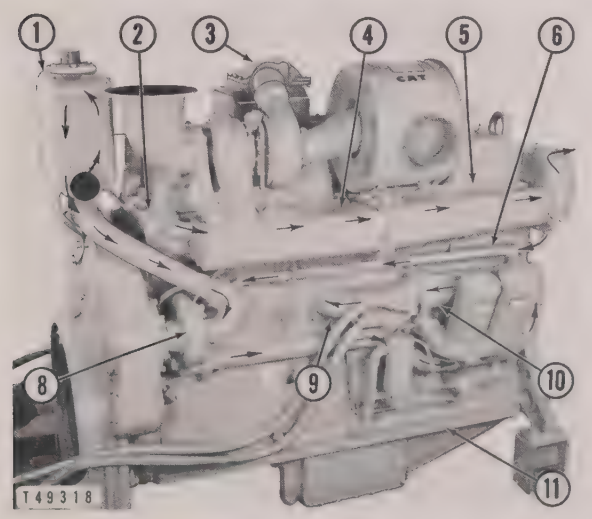

FLOW OF COOLANT
1–Expansion tank. 2–Cylinder head. 3–Aftercooler. 4–Water and exhaust manifold. 5–Cylinder head. 6–By-pass line. 8–Water pump. 9–Marine gear or torque converter oil cooler. 10–Engine oil cooler. 11–Cylinder block.

On initial starting, the temperature of the coolant is usually not high enough to open the water temperature regulators **(7)**. Therefore, the coolant which enters the right side of the regulator housing must pass through the regulators into the left side of the housing. The coolant is then directed through the by-pass line **(6)** back to the inlet side of the water pump thereby eliminating the heat exchanger **(12)** from the system and assuring a rapid warm-up.

When the coolant has reached the operating temperature, the regulators **(7)** open allowing the coolant to flow through the center section of the regulator housing and to the heat exchanger **(12)** to be cooled. The coolant flows from the heat exchanger through the expansion tank **(1)** to the water pump **(8)** and the circulation cycle is repeated. When the regulators are fully open, the flow through the by-pass line **(6)** is sealed off, thereby routing the entire capacity of the cooling system through the heat exchanger. See the topic, WATER TEMPERATURE REGULATOR, for further information on regulator function.

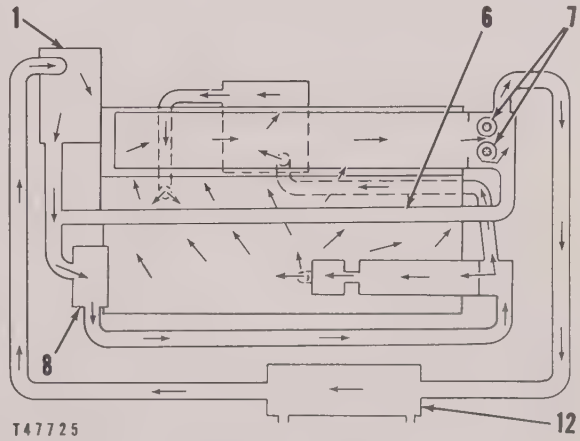

FLOW OF COOLANT
(Regulators Open)
1–Expansion tank. 6–By-pass line. 7–Regulators. 8–Water pump. 12–Heat exchanger.

The expansion tank is located between the heat exchanger and the water pump. This tank provides the necessary space for the expansion and contraction of the coolant.

Raw water is pumped by the raw water pump through the raw water cooled aftercooler, on engines so equipped, and to the heat exchanger **(12)**.

OVERHEATING

If difficulty is experienced with the engine overheating, check the following possible causes:

1. Coolant Level.
   Insufficient coolant in the cooling system. If the coolant level has been allowed to fall so low that the coolant is no longer circulating, the engine should be stopped immediately and allowed to cool before adding coolant. If there is still good circulation, add make-up coolant slowly while the engine is running. These precautions will minimize the possibility of cracking of the cylinder head.

2. Raw Water.
   Insufficient raw water. Excessive scale or sediment deposits in the inlet and outlet lines will reduce the amount of raw water available to cool the engine coolant.

3. Water Temperature Indicator.
   It may be that the indicator is not registering correctly. If the indicator is suspected of giving a false reading, install a new one and check the reading.

4. Water Temperature Regulators.
   Failure of water temperature regulators to open. Check the regulators for opening temperature as described in the topic, TESTING TEMPERATURE REGULATORS. Observe the amount of scale deposited on the regulators. Too much scale will obstruct operation. The engine should not be operated with the regulators removed.

5. Water Pump.
   A badly corroded, worn or loose water pump impeller.

6. Raw Water Pump.
   A badly corroded pump body or worn water pump impeller.

7. Internal Clogging.
   Excessive scale or sediment deposits in the heat exchanger, cylinder head or block. Such deposits can cause serious damage to the engine, by retarding the transfer of heat from the head and cylinders to the coolant. In such cases, the water temperature may not be above normal. However, loose scale and sediment may deposit in water passages to such an extent that circulation will be retarded, in which case the water temperature may go above normal.

   To check for lime and scale in the cooling system, remove one of the precombustion chambers and inspect the surface which comes in contact with the coolant. To remove hard scale, follow the directions in accordance with the Operation and Maintenance Instructions.

8. Continuous Overload.
   Operating an engine at a continuous overload, which lugs the engine speed down below its rated speed, may also cause overheating. As a correction, the load on the engine should be reduced to allow the engine to operate at rated speed.

9. Altitude.
   The altitude at which the engine is operating should be considered when overheating is encountered. The horsepower of the engine is decreased as the altitude increases. Also, the boiling point of water is lower at higher altitudes.

10. Overheating can also be caused by combustion gases escaping by the precombustion chamber gaskets or cylinder head gasket and water ferrules and seals. The gases can accumulate in the cylinder head and block or restrict the flow of coolant through the cooling system. Thus, the coolant temperature rises rapidly and hot spots will exist in the cylinder head. The easiest method of checking for this condition is to carefully remove the filler cap and check for air bubbles. If air bubbles are present in the cooling system, check the precombustion chambers for tightness and, if necessary, replace the gaskets.

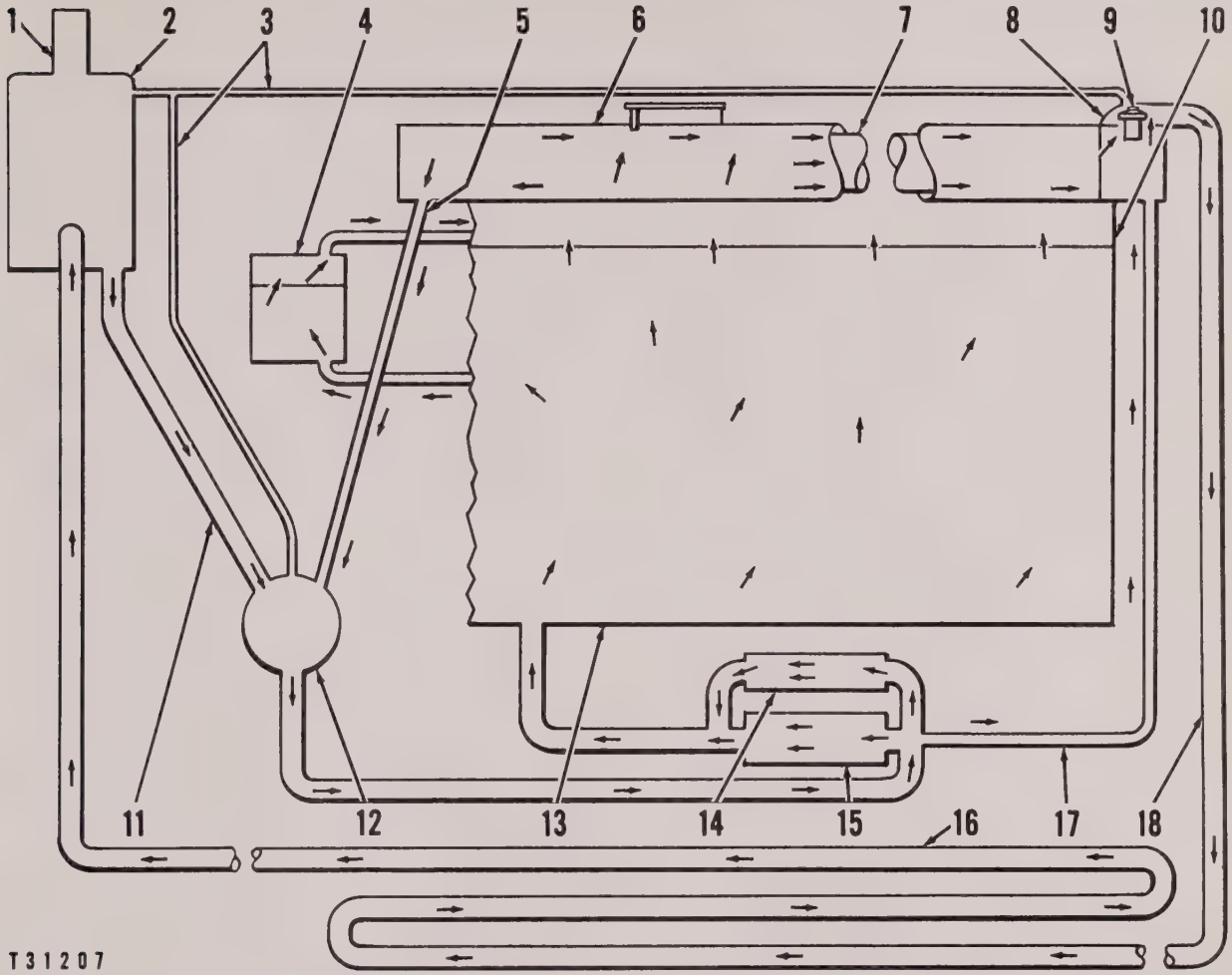

SCHEMATIC DIAGRAM OF KEEL COOLING SYSTEM WITH REGULATORS OPEN

1–Adapter. 2–Expansion tank. 3–Bleed lines. 4–Starting engine. 5–By-pass tube. 6–Water manifold. 7–Water-cooled exhaust manifold. 8–Regulator compartment. 9–Water temperature regulator. 10–Cylinder head. 11–Return line. 12–Water pump. 13–Engine block. 14–Marine gear oil cooler. 15–Engine oil cooler. 16–Keel cooler. 17–Tube. 18–Cooler line.

Cooling System

(Keel Cooling)

The flow of coolant is as follows:

The coolant is delivered to the engine oil cooler **(15)** and marine gear oil cooler **(14)** under pressure from the discharge side of the water pump **(12)**. After passing through the engine oil cooler and the marine gear oil cooler, the coolant enters the diesel engine cylinder block **(13)**. The coolant circulates around the cylinder liners.

A portion of the coolant is directed into the starting engine **(4)** and cools the starting engine cylinder block and the cylinder head. This coolant then passes into the cylinder head of the diesel engine. When the starting engine is running, warm water is discharged into the diesel engine cooling system to facilitate starting the diesel engine. The greater portion of the coolant passes directly from the engine block **(13)** through the water directors into the cylinder head **(10)**. The coolant flows from the cylinder head into the water manifold **(6)**, which also serves as a water jacket for the water-cooled exhaust manifold **(7)**. The coolant flows around the exhaust manifold to the regulator compartment **(8)** where it contacts the water temperature regulators **(9)**.

On initial starting, the temperature regulators remain closed until the engine coolant reaches operating temperature. In this case all the coolant passes through the by-pass line **(5)** and returns to the suction side of the water pump and is delivered through the system again. Thus, the flow circuit is completed with the regulators in the closed position.

When the coolant is at operating temperature, the regulators open. The coolant flows through the regu-

lators **(9)** into the line **(18)** that leads to the keel cooler **(16)** to be cooled, and returns to the suction side of the water pump through the expansion tank **(2)** and the return line **(11)**. A small portion of the coolant passes through the by-pass line **(5)** at all times and returns to the water pump, to complete the flow circuit when the regulators are open.

The expansion tank **(2)** located between the keel cooler and water pump provides a space for expansion of the coolant, an opening for filling the cooling system, and also eliminates the possibility of air locking. An adapter **(1)** provides a hose connection for an additional expansion tank if desired.

Because of the sensitivity of the temperature regulators and the variations in temperature in areas of the water-cooled exhaust manifold, a means has been provided to maintain a more stable operation of the temperature regulators. A tube **(17)** from the elbow of the engine oil cooler to the temperature regulator compartment delivers a stream of coolant around the temperature regulators and provides a more stable coolant temperature variation acting on the temperature regulators.

The bleed lines **(3)** provide a means of escape for any air or water vapor that might collect in the regulator compartment or water pump.

OVERHEATING

If difficulty is experienced with the engine overheating, check the following possible causes:

1. Coolant Level.
   Insufficient coolant in cooling system. If the coolant level has been allowed to fall so low that the coolant is no longer properly circulating, the engine should be stopped immediately and allowed to cool before adding coolant. If there is still good circulation, add make-up coolant slowly while the engine is running. These precautions will minimize the possibility of cracking the cylinder head.

2. Water Temperature Regulators.
   Failure of water temperature regulator to open. Check the regulator for opening temperature as described in the topic, TESTING TEMPERATURE REGULATORS. Observe the amount of scale deposited on the regulators. Too much scale will obstruct operation. The engine should not be operated with a regulator removed.

3. Water Pump.
   Badly corroded or worn water pump impeller or impeller loose on shaft.

4. Internal Clogging.
   Excessive scale or sediment deposits in keel cooler, cylinder head and block. Such deposits can cause serious damage to the engine by retarding the transfer of heat from the head and cylinders to the coolant. In such cases, the water temperature may not be above normal. However, loose scale and sediment may deposit in water passages to such an extent that circulation will be retarded, in which case the water temperature may go above normal.

   To check for lime and scale in the cooling system, remove one of the precombustion chambers and inspect the surface which comes in contact with the coolant. To remove hard scale, follow the directions in Operation and Maintenance Instructions.

5. Continuous Overload.
   Operating a machine at full throttle under a continuous overload which lugs the engine speed down below its rated speed may also cause overheating. As a correction, reduce the load to allow engine to operate at rated speed.

6. Water Temperature Indicator.
   It may be that the indicator is not registering correctly. If the indicator is suspected of giving a false reading, install a new one and check the reading.

7. Overheating can also be caused by combustion gases escaping by the precombustion chamber gaskets or cylinder head gaskets and water ferrules and seals. The gases can accumulate in the cylinder head and block or restrict the flow of coolant through the cooling system. Thus, the coolant temperature rises rapidly and hot spots will exist in the cylinder head. The easiest method of checking for this condition is to carefully remove the filler cap and check for air bubbles. If air bubbles are present in the cooling system, check the precombustion chambers for tightness and, if necessary, replace the gaskets.

Cooling System

(Keel Cooling)

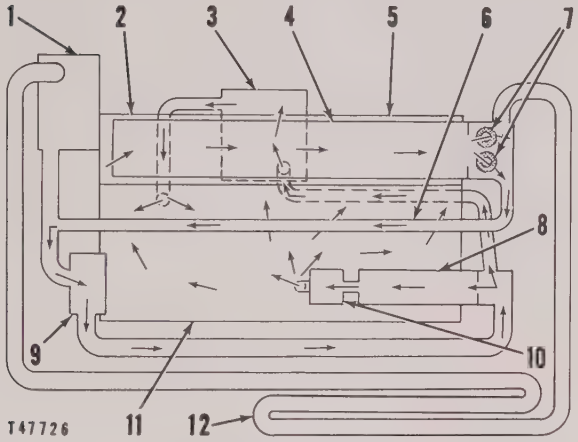

FLOW OF COOLANT
(Regulators Closed)

1–Expansion tank.
2–Cylinder head.
3–Aftercooler.
4–Water and exhaust manifold.
5–Cylinder head.
6–By-pass line.
7–Regulators.
8–Engine oil cooler.
9–Water pump.
10–Marine gear oil cooler.
11–Cylinder block.
12–Keel cooler.

The flow of fresh water coolant is as follows: The coolant is circulated by the water pump **(9)** through the aftercooler **(3)**, engine oil cooler **(8)** and marine gear oil cooler **(10)** to the cylinder block **(11)**. The gasoline starting engine, on engines so equipped, mounts on the left side of the diesel engine and receives its coolant from the diesel engine cooling system. That portion of the coolant which enters the diesel engine cylinder block **(11)** passes through the cylinder heads **(2)** and **(5)** and into the water and exhaust manifold **(4)**.

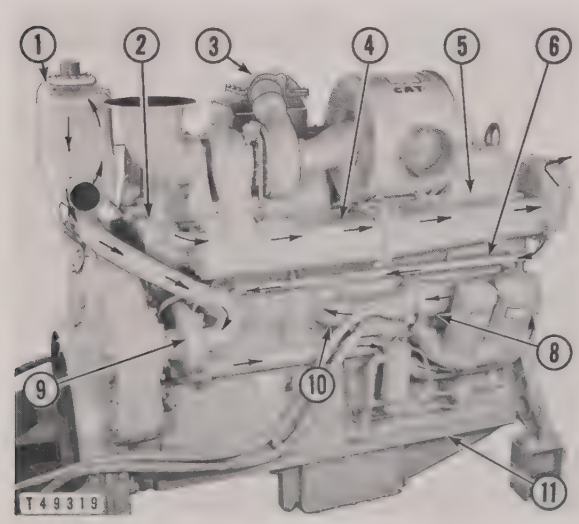

FLOW OF COOLANT
1–Expansion tank. 2–Cylinder head. 3–Aftercooler. 4–Water and exhaust manifold. 5–Cylinder head. 6–By-pass line. 8–Engine oil cooler. 9–Water pump. 10–Marine gear oil cooler. 11–Cylinder block.

On initial starting, the temperature of the coolant is usually not high enough to open the water temperature regulators **(7)**. Therefore, the coolant which enters the right side of the regulator housing must pass through the regulators into the left side of the housing. The coolant is then directed through the by-pass line **(6)** back to the inlet side of the water pump thereby eliminating the keel cooler **(12)** from the system and assuring a rapid warm up.

When the coolant has reached the operating temperature, the regulators **(7)** open allowing the coolant to flow through the center section of the regulator housing and to the keel cooler **(12)** to be cooled. The coolant flows from the keel cooler through the expansion tank **(1)** to the water pump **(9)** and the circulation cycle is repeated. When the regulators are fully open, the flow through the by-pass line **(6)** is sealed off, thereby routing the entire capacity of the cooling system through the keel cooler. See the topic, WATER TEMPERATURE REGULATOR, for further information on regulator function.

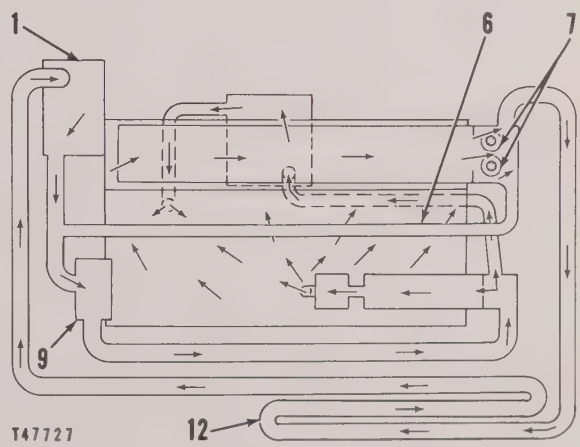

FLOW OF COOLANT
(Regulators Open)
1–Expansion tank. 6–By-pass line. 7–Regulators. 9–Water pump. 12–Keel cooler.

The expansion tank is located between the keel cooler and the water pump. This tank provides the necessary space for the expansion and contraction of the coolant.

OVERHEATING

If difficulty is experienced with the engine overheating, check the following possible causes:

1. Coolant Level.
   Insufficient coolant in the cooling system. If the coolant level has been allowed to fall so low that the coolant is no longer properly circulating, the engine should be stopped immediately and allowed to cool before adding coolant. If there is still good circulation, add make-up coolant slowly while the engine is running. These precautions will minimize the possibility of cracking the cylinder head.

2. Water Temperature Indicator.
   It may be that the indicator is not registering correctly. If the indicator is suspected of giving a false reading, install a new one and check the reading.

3. Water Temperature Regulators.
   Water temperature regulators fail to open. Check the regulators for opening temperature as described in the topic, TESTING TEMPERATURE REGULATOR. Observe the amount of scale deposited on the regulator. Too much scale will obstruct operation. The engine should not be operated with the regulators removed.

4. Water Pump.
   Badly corroded or worn water pump impeller.

5. Internal Clogging.
   Excessive scale or sediment deposits in keel cooler, cylinder head and block. Such deposits can cause serious damage to the engine by retarding the transfer of heat from the head and cylinders to the coolant. In such cases, the water temperature may not be above normal. However, loose scale and sediment may deposit in water passages to such an extent that circulation will be retarded, in which case the water temperature may go above normal.

   To check for lime and scale in the cooling system, remove one of the precombustion chambers and inspect the surface which comes in contact with the coolant. To remove hard scale, follow the directions in Operation and Maintenance Instructions.

6. Continuous Overload.
   Operating an engine at a continuous overload which lugs the engine RPM down below its rated speed, may also cause overheating. As a correction, reduce the load to allow engine to operate at rated speed.

7. Overheating can also be caused by combustion gases escaping by the precombustion chamber gaskets or cylinder head gaskets and water ferrules and seals. The gases can accumulate in the cylinder head and block or restrict the flow of coolant through the cooling system. Thus, the coolant temperature rises rapidly and hot spots will exist in the cylinder head. The easiest method of checking for this condition is to carefully remove the filler cap and check for air bubbles. If air bubbles are present in the cooling system, check the precombustion chambers for tightness and, if necessary, replace the gaskets.

Water Temperature Regulator

Water temperature regulators are used to restrict the flow of coolant through the radiator until the engine is warmed up. After this, the function of the regulators is to maintain the most efficient engine operating temperature.

The temperature regulators within the diesel engine cooling system are designed to give an approximate minimum coolant temperature of 160° F. The maximum operating temperature will vary according to the air temperature and load factor, but should never exceed boiling temperature at the prevailing altitude.

REMOVAL AND INSTALLATION

1. Drain the cooling system until the coolant level is below the regulators.
2. Disconnect the hose **(2)** and remove the bolts which hold the cover **(1)** to the manifold **(3)**.

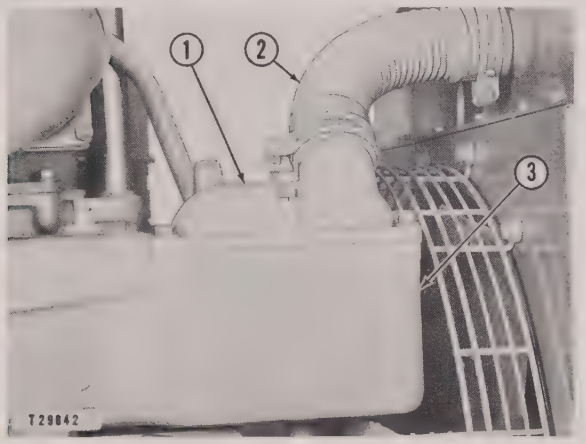

COVER REMOVAL
1–Cover. 2–Hose. 3–Manifold.

3. Lift out the regulator **(4)**.

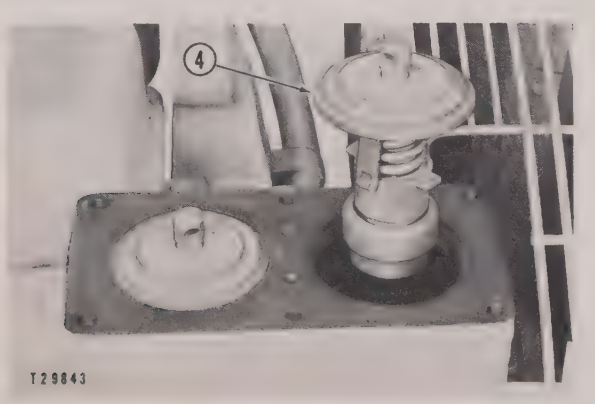

REMOVING TEMPERATURE REGULATOR
4–Regulator.

4. When installing the regulator, be sure it is seated in its bore.

TESTING TEMPERATURE REGULATOR

The opening temperature of the regulators should be approximately 174°-178° F. and the regulator should be fully open approximately 186° F. The opening temperature is stamped on the side strap, for use in testing.

1. Remove the regulator from the manifold.
2. Suspend the regulator in a pan of water as shown.

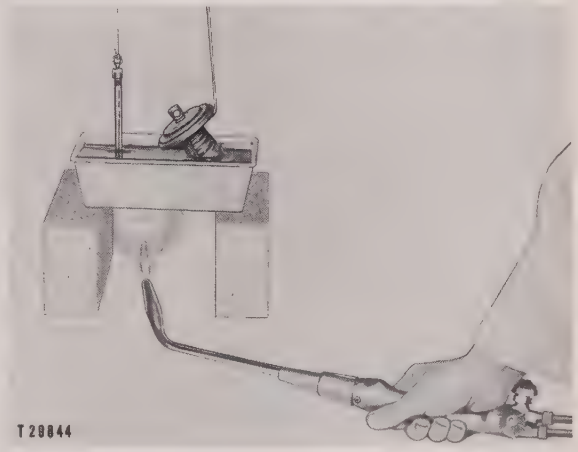

TESTING WATER TEMPERATURE REGULATOR

3. Apply heat to the pan and stir the water to maintain uniformity.
4. Observe the opening temperature of the regulator.

If the regulator does not operate correctly, due to accumulated rust, scale or sludge, it can be cleaned. See the covering topic, CLEANING TEMPERATURE REGULATOR.

CLEANING TEMPERATURE REGULATOR

Accumulations of rust, scale and sludge can restrict the action of the regulator. This type regulator can be disassembled for cleaning the piston, which in many instances, is all that is required to restore the regulator's service.

Using a 2⅛" length of pipe with a 2" ID, a tool **(9)** can be made to facilitate disassembly and assembly of the regulator.

1. Place the tool over the power element **(4)** with the two ½" x ⅝" slots aligned with the straps **(2)**. The tool will contact the flanges **(3)**.

NOTE

A short length of pipe approximately 1¾" OD placed against the valve plate **(1)** will eliminate eccentric loads on the regulator when compressing the springs **(8)**.

2. Using the short length of pipe and the tool **(9)**, compress the springs **(8)** with a vise or arbor press until the straps **(2)** can be removed.
3. Remove the regulator from the compressing device and remove the valve plate **(1)**.
4. Remove the staked metal from the top of the counterbore above the retainer **(5)**.
5. Place a piece of cloth around the exposed portion of the piston **(7)** to protect it and pull the piston seal and retainer out of the regulator with pliers.
6. Remove the retainer **(5)** and seal **(6)** from the piston.

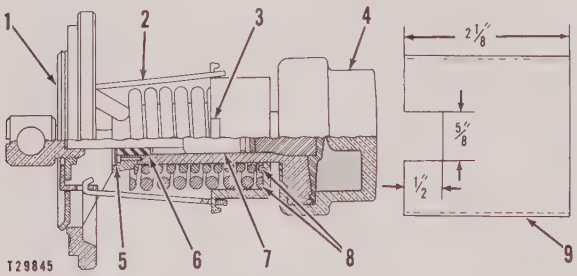

PREPARING TO DISASSEMBLE WATER TEMPERATURE REGULATOR

1–Valve plate. 2–Strap. 3–Flange. 4–Power element. 5–Retainer. 6–Seal. 7–Piston. 8–Springs. 9–Tool.

7. Clean the piston with crocus cloth and lubricate it with water pump grease.
8. Place a new seal over the small end of the piston and install the piston and seal into the regulator.
9. Install a new retainer and stake it in place.
10. Install the valve plate and straps in the reverse order of removal.

Water Temperature Regulator

Water temperature regulators are used to restrict the flow of water through the radiator until the engine is at operating temperature. After this, the function of the regulators is to maintain an efficient engine operating temperature.

The temperature regulators within the diesel engine cooling system are designed to give an approximate minimum coolant temperature of 160° F. The maximum operating temperature will vary according to the ambient temperature and load factor.

OPERATION

When the water temperature regulators are closed, the coolant flows from the openings **(2)** in the manifold **(1)**, through the regulators **(5)** which are mounted in the adapter **(6)** and into the compartment **(7)**. The coolant flows from the compartment **(7)** through the coolant by-pass line **(8)** to the inlet side of the water pump.

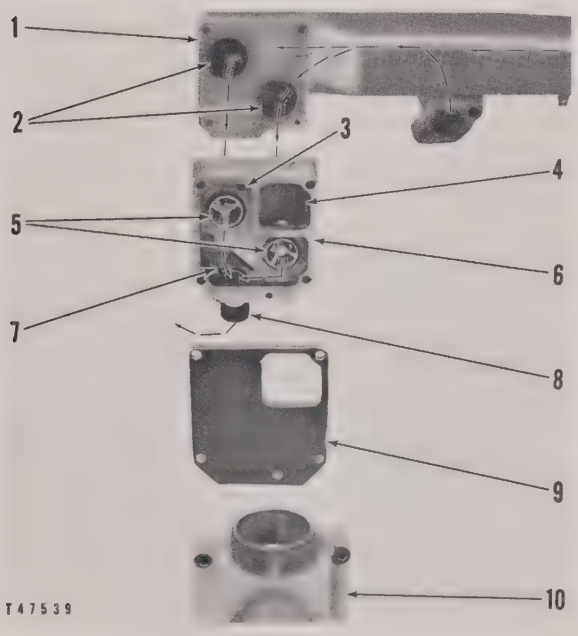

FLOW OF COOLANT (REGULATORS CLOSED)
1–Manifold. 2–Openings. 3–Air and water bleed hole. 4–Compartment. 5–Regulators. 6–Adapter. 7–Compartment. 8–By-pass line. 9–Plate. 10–Housing.

Do not allow the air and water bleed hole **(3)** to become clogged, since it is used to prevent an air lock in the cooling system.

When the water temperature regulators open, they increase in length and fit tightly against the plate **(9)** sealing off the compartment **(7)**. The increase in length of the regulators creates an opening near the middle of the regulators. This opening is not visible since it is located in the compartment **(4)** in the adapter **(6)**. The coolant flows from the openings **(2)** in the manifold **(1)** through the openings in the regulators **(5)** directly into the compartment **(4)**. The coolant leaves the compartment through the hole in the plate **(9)** into the housing **(10)** which is connected to the top tank of the radiator.

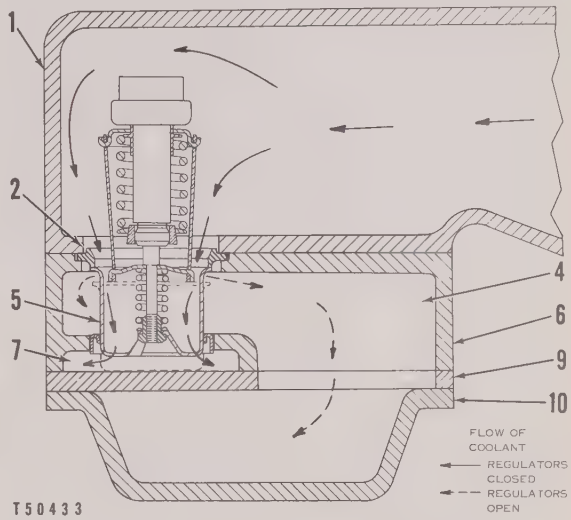

FLOW OF COOLANT
1–Manifold. 2–Openings. 4–Compartment. 5–Regulator. 6–Adapter. 7–Compartment. 9–Plate. 10–Housing.

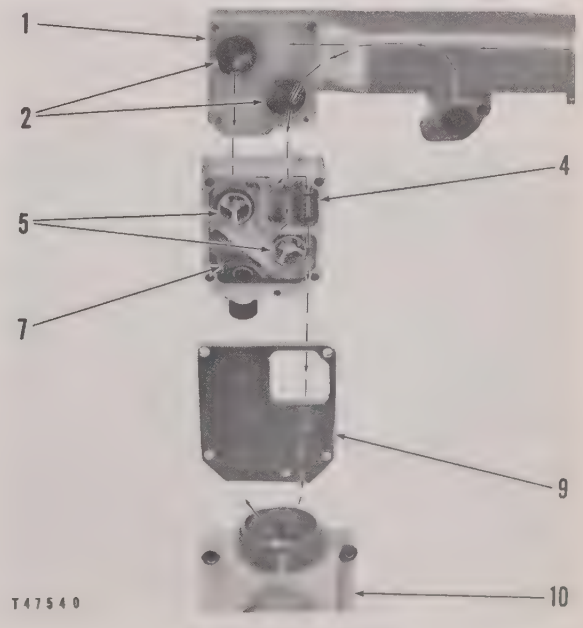

FLOW OF COOLANT (REGULATORS OPEN)
1–Manifold. 2–Openings. 4–Compartment. 5–Regulators. 7–Compartment. 9–Plate. 10–Housing.

REMOVAL AND INSTALLATION

1. Drain the engine coolant to a level below the regulators.

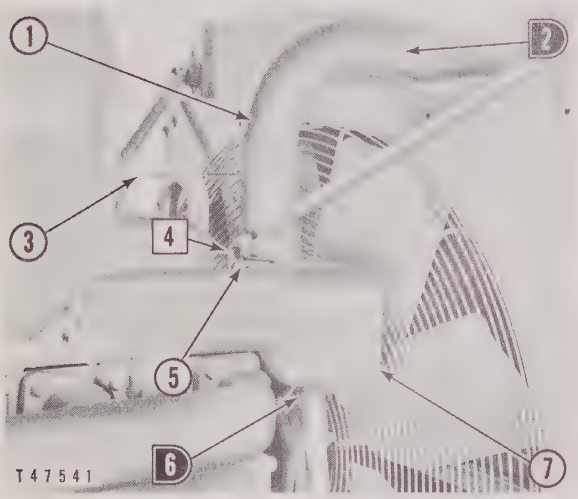

PREPARING TO REMOVE REGULATORS

☐ Remove ◗ Disconnect

1–Elbow, hoses and housing. 2–Hose. 3–Air bleed line. 4–Bracket. 5–Adapter and plate. 6–Hose. 7–Water manifold.

2. Disconnect the air bleed line **(3)** from the water elbow.
3. Remove the bolts holding the adapter and plate **(5)** and the elbow, hoses and housing **(1)** to the water manifold **(7)**. Support the adapter and plate and remove the elbow, hoses and housing as a unit.
4. Remove the adapter and plate as illustrated.

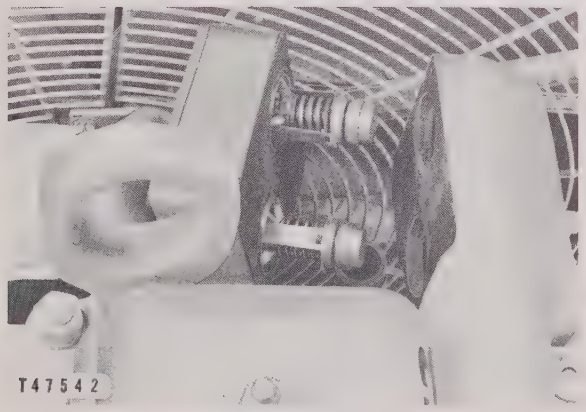

REMOVING ADAPTER AND PLATE

5. Remove the regulators from the adapter.
6. Inspect and replace if damaged, the seal **(8)** and all gaskets.

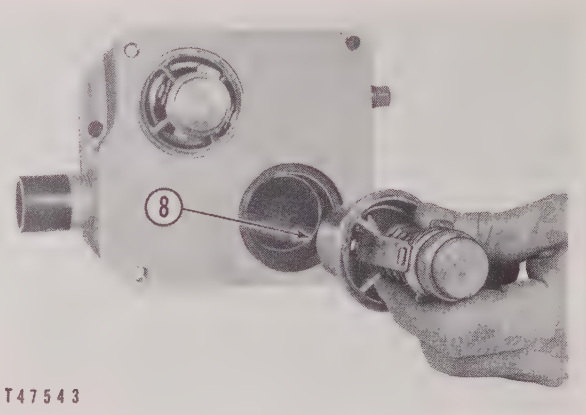

REMOVING REGULATORS
8–Seal.

7. When installing the regulators, be careful not to damage the seal and check to see that the regulators are seated in the bores.

TESTING TEMPERATURE REGULATOR

See the topic, SPECIFICATIONS, for the correct opening and full open temperatures of the regulator. The regulator can be tested in the following manner:

1. Remove the regulator from the regulator housing.
2. Suspend the regulator in a pan of water as shown.

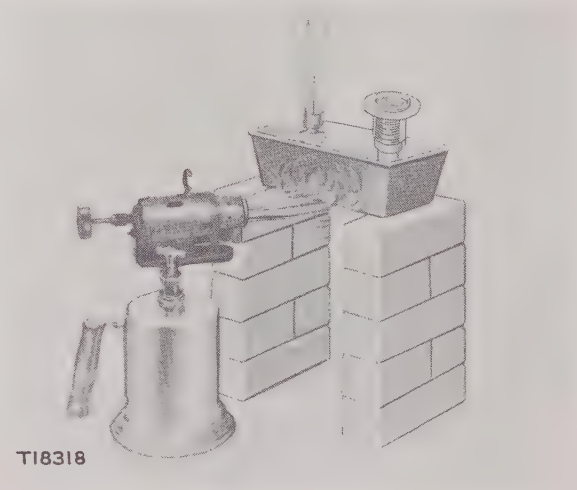

TESTING WATER TEMPERATURE REGULATOR

3. Apply heat to the pan and stir the water to maintain uniformity.
4. Observe the opening temperature of the regulator.
5. Replace if necessary.

WATER MANIFOLD REMOVAL AND INSTALLATION

Remove the air cleaner **(2)**, turbocharger **(1)** and exhaust manifold **(6)**. See the covering topics.

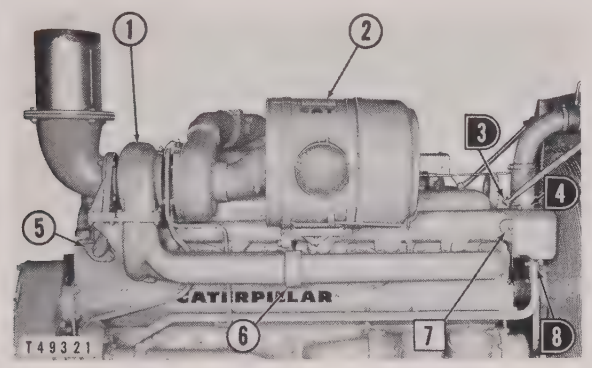

WATER MANIFOLD REMOVAL

☐ Remove ◗ Disconnect

1–Turbocharger. 2–Air cleaner. 3–Radiator brace. 4–Hose. 5–Bolt. 6–Exhaust manifold. 7–Water temperature heat bulb. 8–Hose.

Remove the bolts **(5)** and lift the water manifold from the engine.

Inspect and replace all damaged gaskets and hoses.

Expansion Tank

Expansion tanks are used on engines not equipped with radiators. The expansion tank provides space for the coolant to expand and eliminates the possibility of air locking.

An adapter **(3)** is furnished with marine keel cooling systems to provide a connection to additional expansion tanks. No expansion tank cap is used. However, on heat exchanger cooling systems, a sealed pressure cap and overflow tube are normally installed in place of the adapter **(3)**. See the topic, EXPANSION TANK PRESSURE CAP.

Coolant flows from the expansion tank **(2)** through the outlet pipe **(8)** and into the diesel engine water pump. The line **(11)** carries coolant from the water pump to the cooling system. Water returns to the expansion tank through the water line **(1)** from the cooling system. Air bleed tubes **(4)** and **(5)** are connected to the water pump and the water temperature regulator housing. The by-pass line **(9)** is connected between the water-cooled exhaust manifold, or water manifold, and the water pump inlet elbow **(10)**.

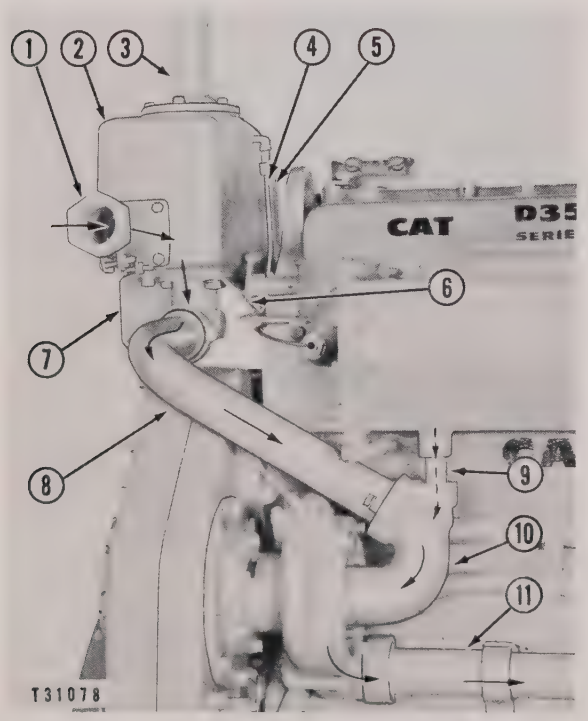

PREPARING TO REMOVE EXPANSION TANK
1–Water line. 2–Expansion tank. 3–Adapter. 4–Air bleed tube. 5–Air bleed tube. 6–Bracket. 7–Support. 8–Outlet pipe. 9–By-pass line. 10–Water pump inlet elbow. 11–Line.

The expansion tank can be removed in the following manner:

1. Drain the cooling system.
2. With the water line **(1)** and the adapter **(3)** disconnected, remove the outlet pipe **(8)** and water pump inlet elbow **(10)**.
3. Disconnect the air bleed tubes **(4)** and **(5)**.
4. Attach a suitable hoist and remove the bolts which hold the expansion tank **(2)** in place on the bracket **(6)** and support **(7)**.
5. Remove the support **(7)** and lift off the expansion tank as shown.

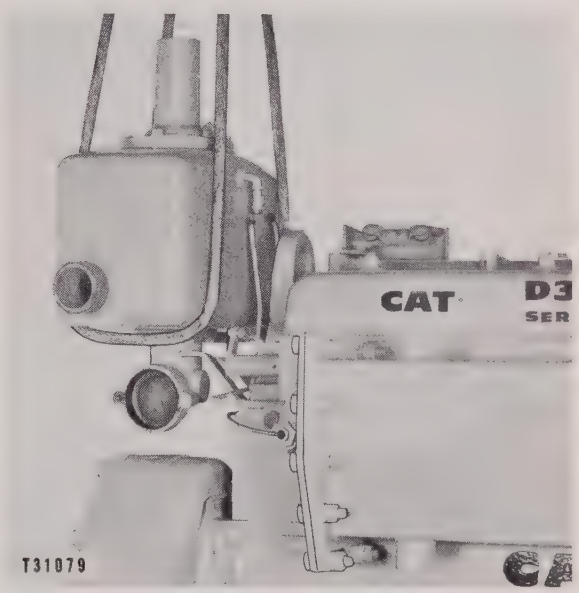

REMOVING EXPANSION TANK

6. Install in the reverse order of removal, replacing any damaged gaskets or seals. Check for water leaks.

EXPANSION TANK PRESSURE CAP

Operation of the Pressure Valve

A pressure valve built into the expansion tank cap permits a limited pressure in the cooling system.

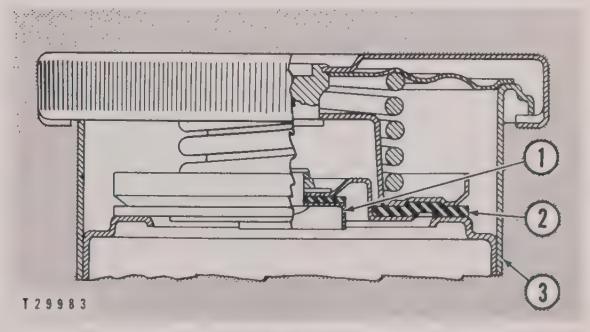

EXPANSION TANK CAP PRESSURE VALVE
1–Vacuum relief valve. 2–Seal. 3–Filler neck.

Due to expansion of the coolant by rising temperature, a pressure will be built up in the system each time the engine is started. When the pressure rises above 4 PSI, the seal **(2)** is lifted off the filler neck **(3)** of the adapter to relieve the pressure, or, if the cooling system has been overfilled, allow some coolant to escape through the overflow tube. The valve closes when the temperature of the coolant levels off and remains closed unless there is a further increase in pressure.

When the temperature of the coolant drops, a vacuum will occur in the cooling system. As soon as the pressure in the system becomes less than atmospheric pressure, the vacuum relief valve **(1)** opens and allows air to enter through the overflow tube. This vacuum relief valve also functions when draining the cooling system.

Removal and Installation

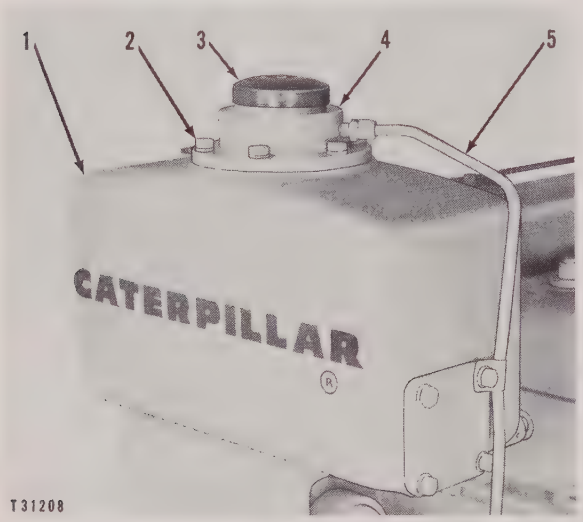

PREPARING TO REMOVE ADAPTER AND CAP
1–Tank. 2–Bolt. 3–Cap. 4–Adapter. 5–Overflow tube.

1. Disconnect the overflow tube **(5)**.

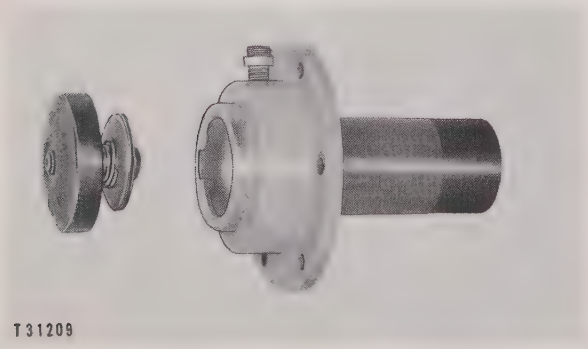

CAP AND ADAPTER

2. Remove bolts **(2)** attaching adapter **(4)** to the expansion tank **(1)**.
3. Lift the cap **(3)** and adapter **(4)** out of the tank.
4. Inspect and replace the gasket if damaged. Place the adapter in the tank and install the bolts and the overflow tube.

Expansion Tank

An expansion tank is used on engines not equipped with a radiator. The expansion tank provides space for the coolant to expand and contains an opening for filling the cooling system. It also holds a reserve supply of coolant thus eliminating the possibility of air locking. A sealed pressure overflow is incorporated in the expansion tanks, on some applications, to maintain a specific pressure within the cooling system.

REMOVAL AND INSTALLATION

1. Drain the fresh water system.

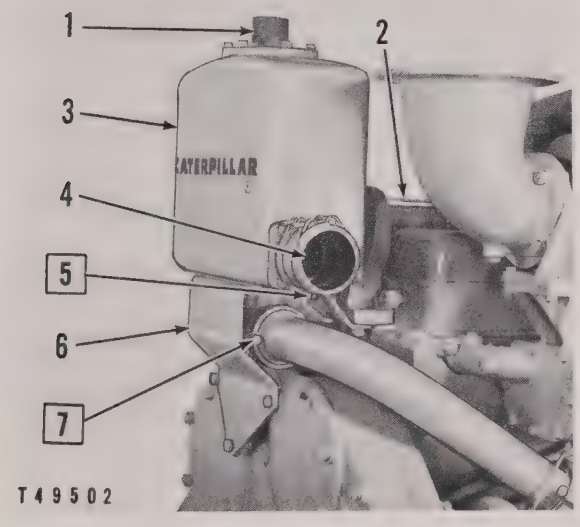

PREPARING TO REMOVE EXPANSION TANK

☐ **Remove**

1–Adapter. 2–Vent tube. 3–Expansion tank. 4–Inlet. 5–Bolts (two). 6–Support. 7–Bolt.

2. Disconnect the lines attached to the adapter **(1)** and inlet **(4)**.

NOTE

On expansion tanks equipped with a sealed pressure overflow, it will be necessary to also disconnect the overflow tube from the unit prior to removal.

3. Disconnect the vent tube **(2)** from the rear of the expansion tank **(3)**.

4. Install two 3/8″-16 (NC) eyebolts in the top of the expansion tank and remove the bolts securing the support **(6)** to timing gear housing. Remove the expansion tank as illustrated.

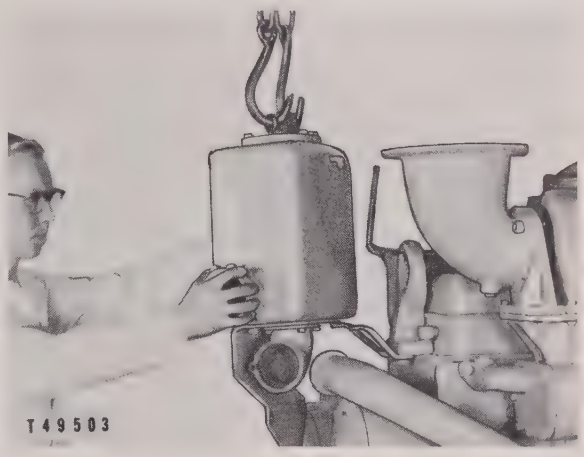

REMOVING EXPANSION TANK

PRESSURE REGULATING CAP

A pressure regulating valve, built into the expansion tank cap, permits a limited amount of pressure within the fresh water cooling system.

Due to expansion of the coolant by rising temperature, pressure will build up in the system each time the engine is started. When this pressure rises above 6 PSI, the seal **(1)** is lifted off the filler neck **(3)** to relieve the pressure or, if the cooling system has been overfilled, to allow some coolant to escape through the overflow tube. The valve closes when the temperature of the coolant levels off and remains closed unless there is a further increase in pressure.

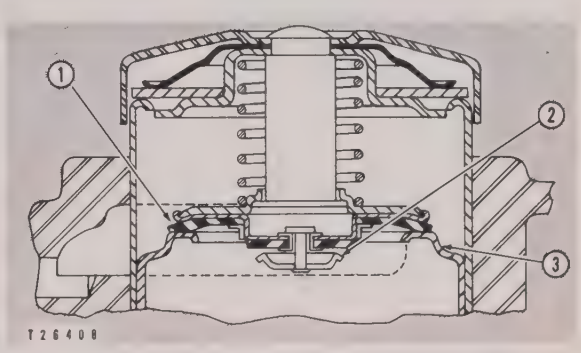

PRESSURE REGULATING CAP
1–Seal. 2–Vacuum relief valve. 3–Filler neck.

When the temperature of the coolant falls, a vacuum will be built up in the cooling system. As soon as the pressure in the system becomes less than atmospheric pressure, the vacuum relief valve **(2)** opens and allows air to enter through the overflow tube. This vacuum relief valve also functions when draining the cooling system.

REMOVING PRESSURE REGULATOR ADAPTER

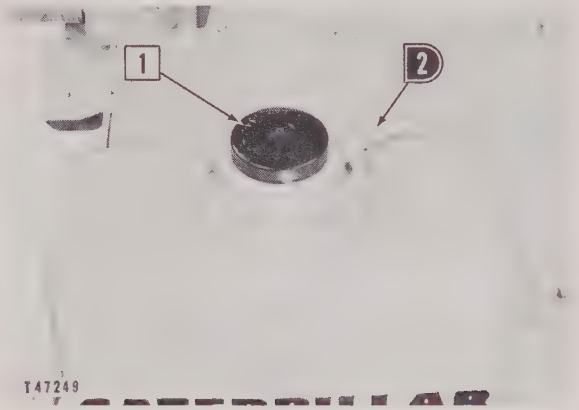

PREPARING TO REMOVE REGULATOR ADAPTER

Remove Disconnect

1–Cap. 2–Overflow tube.

Remove the bolts securing the regulator adapter to the expansion tank and remove as illustrated.

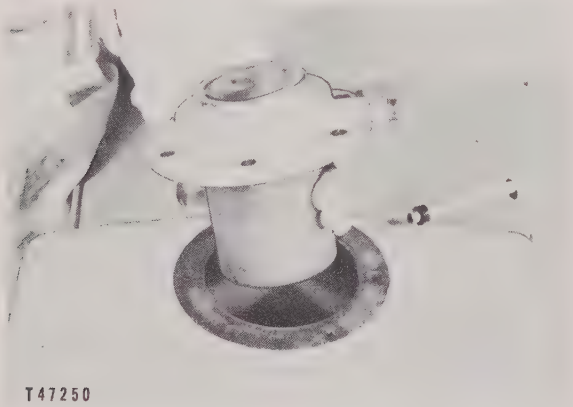

REMOVING REGULATOR ADAPTER

Fan Group

The fan is driven by two V-belts from a pulley on the front of the crankshaft.

The belts and pulleys should be kept free of any accumulations of dirt and grease to prevent excessive wear on the belts and pulleys and to prevent overheating due to belt slippage.

FAN BELT REPLACEMENT

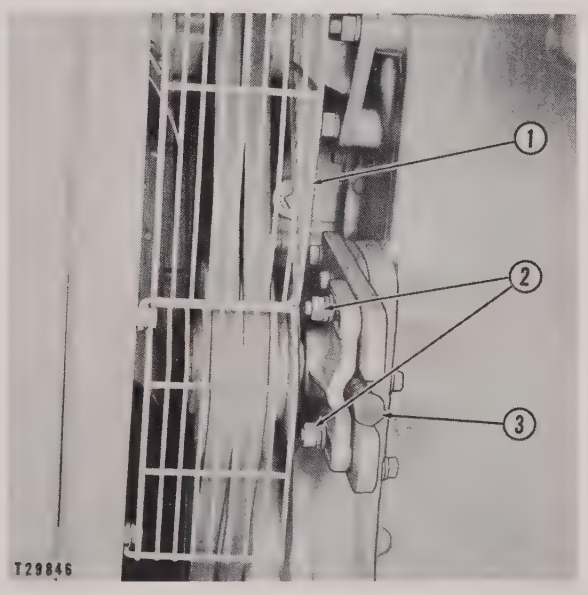

PREPARING TO REMOVE FAN BELTS
1–Left guard. 2–Nuts. 3–Adjusting screw.

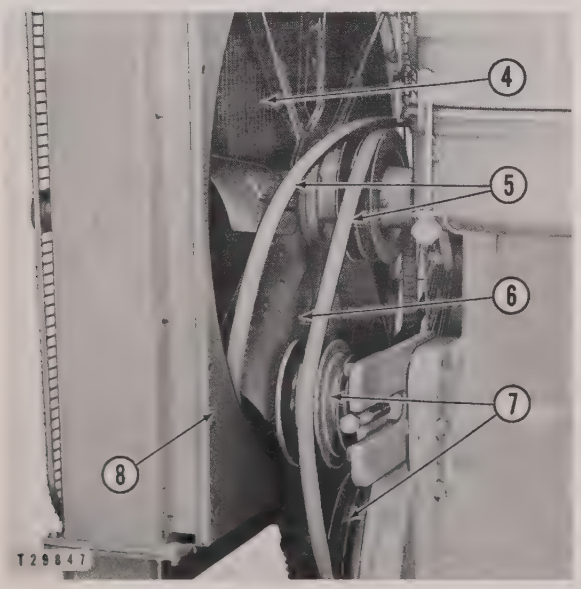

REMOVING FAN BELT
4–Radiator core. 5–Belts. 6–Fan blade. 7–Pulleys. 8–Shield.

1. Remove the left guard **(1)** of the fan guard assembly.
2. Loosen the nuts **(2)** and turn the adjusting screw **(3)** counterclockwise to relieve the tension on the fan belts.
3. Remove the fan belts **(5)** from the crankshaft and idler pulleys **(7)** and while rotating the fan slowly, slide each belt, one at a time, between the fan blades **(6)** and the shield **(8)** at the point of greatest clearance.
4. Continue to rotate the fan until the belt has been completely passed to the radiator side of the fan and remove the belt from between the radiator core **(4)** and the fan assembly.

FAN AND BRACKET REMOVAL

1. Remove the fan belts as explained in the topic, FAN BELT REPLACEMENT.
2. Remove the radiator. See the covering topic.

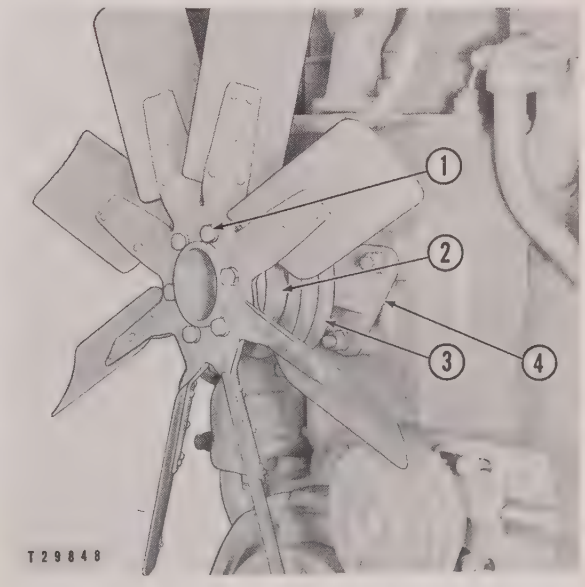

PREPARING TO REMOVE FAN AND BRACKET
1–Bolt. 2–Adapter. 3–Pulley. 4–Bracket.

3. Remove the bolts **(1)** that secure the fan assembly to the adapter **(2)** and remove the fan.
4. Remove the nuts that secure the bracket **(4)** to the cylinder block and remove the adapter **(2)**, pulley **(3)** and bracket as an assembly.

FAN ADAPTER, PULLEY AND BRACKET DISASSEMBLY AND ASSEMBLY

1. Remove the bolts **(2)** which hold the adapter **(4)** to the pulley **(3)** and remove the adapter.

2. Pry the cover **(7)** which protects the bearing **(14)** from dirt, off the pulley.

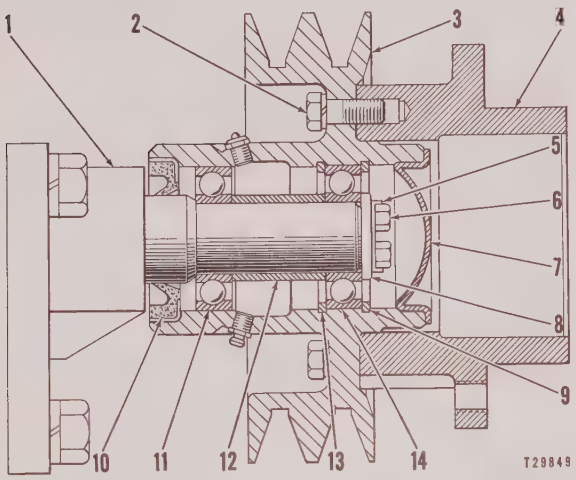

FAN ADAPTER, PULLEY AND BRACKET (CROSS-SECTION)
1–Bracket. 2–Bolt. 3–Pulley. 4–Adapter. 5–Lock. 6–Bolt. 7–Cover. 8–Retainer washer. 9–Lock ring. 10–Seal. 11–Bearing. 12–Spacer. 13–Lock ring. 14–Bearing.

3. Straighten the lock **(5)**, remove the bolts **(6)** and retainer washer **(8)** that secure the pulley to the shaft, and remove the pulley.

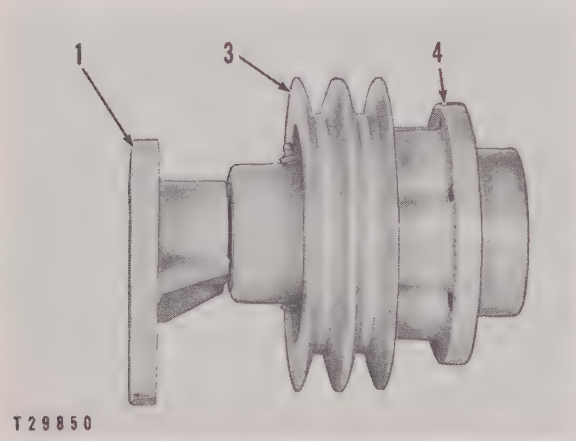

PREPARING TO REMOVE ADAPTER
1–Bracket. 3–Pulley. 4–Adapter.

4. Remove and inspect the seal **(10)**, and replace if worn or damaged.

NOTE

Install the seal with the lip facing the bracket.

5. Remove the lock ring **(9)** and force the bearing **(14)** out of the pulley from the bracket side.

6. Remove the lock ring **(13)**, the bearing **(11)** and spacer **(12)**.

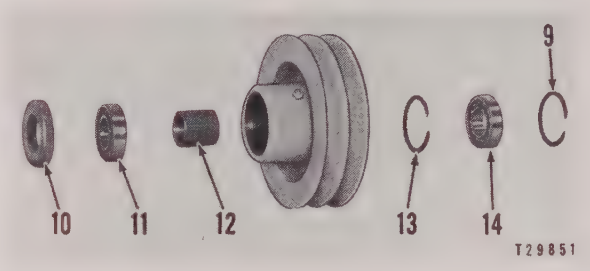

PULLEY DISASSEMBLED
9–Lock ring. 10–Seal. 11–Bearing. 12–Spacer. 13–Lock ring. 14–Bearing.

7. Inspect all parts for wear or damage and assemble in the reverse order of disassembly.

FAN IDLER PULLEY AND BRACKET

Removal

Loosen the fan belts. See the topic, FAN BELT REPLACEMENT.

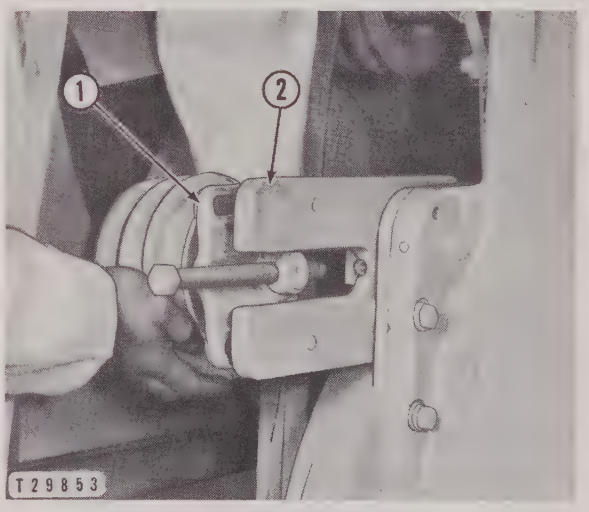

REMOVING PULLEY AND BRACKET
1–Bracket. 2–Mounting bracket.

Remove the nuts securing the bracket **(1)** to the mounting bracket **(2)** and remove the pulley assembly as illustrated.

Disassembly and Assembly

1. Remove the cover **(4)** from the pulley **(1)**.
2. Flatten the lock **(3)** and remove the bolts that secure the retaining washer **(2)**.
3. Using an 8B7548 Push Puller with an 8B7551 Bearing Pulling Attachment, remove the pulley and bearings as an assembly.

4. Drive the bearing **(7)** from the back of the pulley.

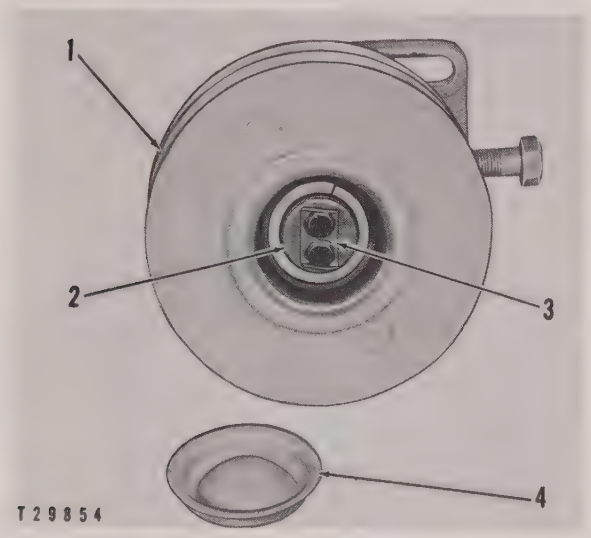

FAN IDLER DISASSEMBLY
1–Pulley. 2–Retaining washer. 3–Lock. 4–Cover.

5. Remove the snap rings **(8)**.

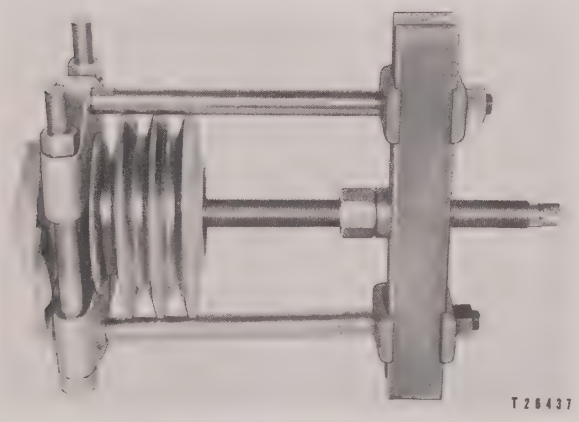

REMOVING IDLER PULLEY

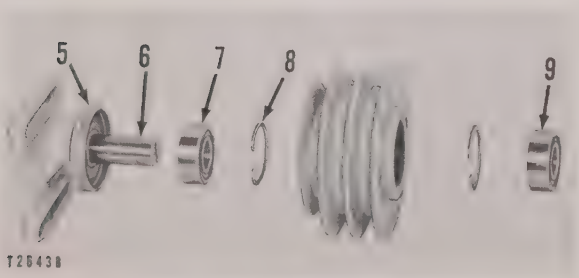

FAN IDLER DISASSEMBLED
5–Shield. 6–Shaft. 7–Bearing. 8–Snap ring. 9–Bearing.

6. Drive or press the bearing **(9)** from the front of the pulley.

7. The shield **(5)**, which is a press fit on the shaft **(6)**, need not be removed unless it is worn or damaged and must be replaced.

8. Assemble in the reverse order of disassembly, making certain that the snap rings and bearings are properly seated.

Fan Group

The fan is driven by two V-belts from a pulley on the crankshaft. The fan pulley **(6)** is carried by the shaft **(2)**, which is part of the bracket assembly **(3)**, and revolves on two bearings **(5)**. The fan spider assembly **(1)** bolts to the pulley through the cover assembly **(4)**.

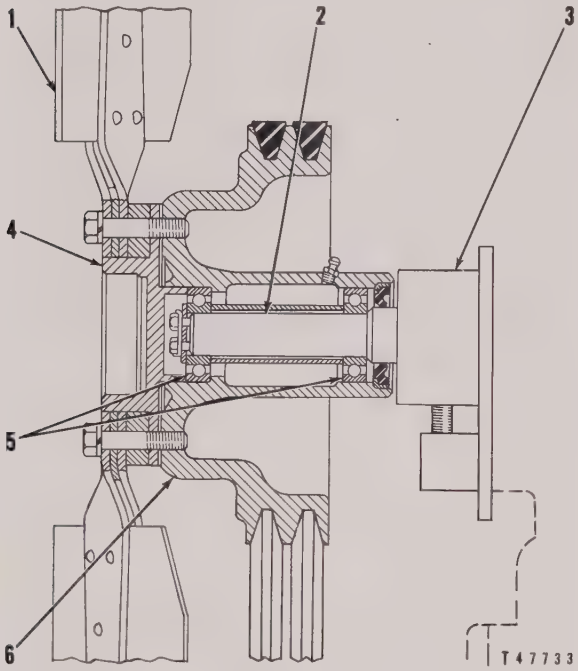

FAN GROUP
1–Spider assembly. 2–Shaft. 3–Bracket assembly. 4–Cover assembly. 5–Bearings. 6–Pulley.

REMOVAL AND INSTALLATION

Remove the radiator and fan belts, if so equipped. See the covering topics.

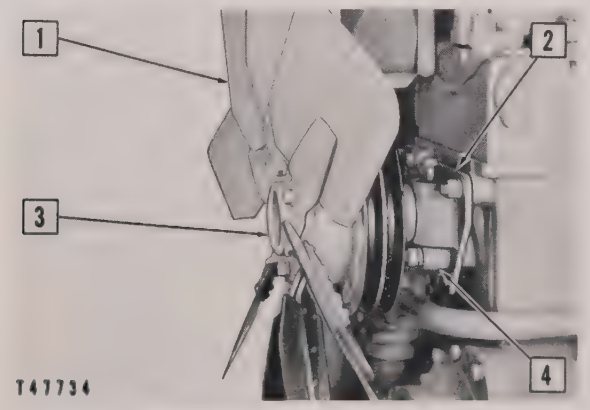

PREPARING TO REMOVE FAN

☐ **Remove**

1–Spider assembly. 2–Pulley and bracket assembly. 3–Cover assembly. 4–Boss.

DISASSEMBLY AND ASSEMBLY

Press the bracket assembly **(3)** from the pulley **(2)**.

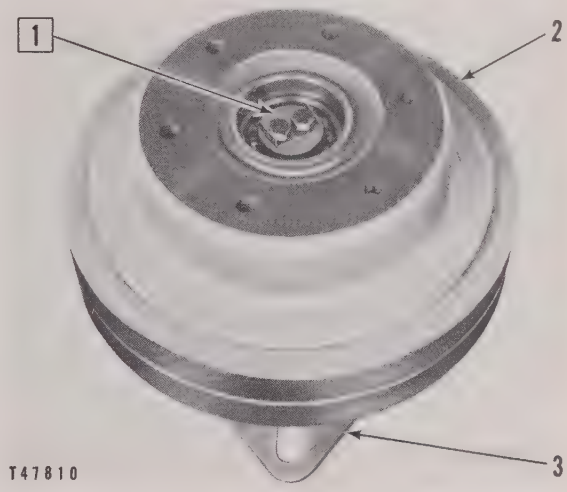

BRACKET ASSEMBLY AND PULLEY DISASSEMBLY

☐ **Remove**

1–Bolts, lock and washer. 2–Pulley. 3–Bracket assembly.

Remove the seal **(6)**, bearings **(4)** and spacer **(5)** from the pulley **(2)**.

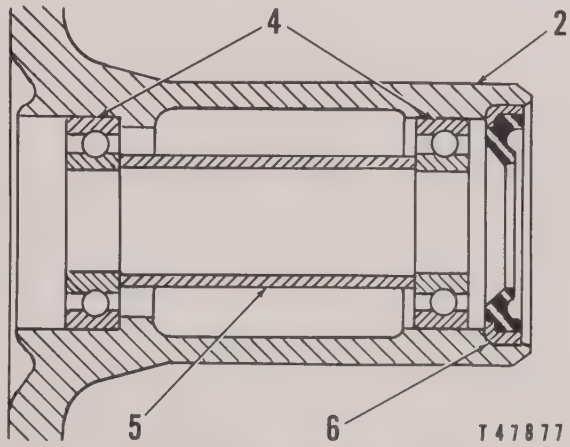

PULLEY DISASSEMBLY
2–Pulley. 4–Bearings. 5–Spacer. 6–Seal.

Inspect and replace, if damaged, the seal **(6)**. Install the seal with the lip of the seal facing away from the bearings **(4)**.

FAN BELT REPLACEMENT

1. Remove the fan guard assembly.
2. Loosen the bolt **(1)** and nuts **(3)** and turn the adjusting screw **(2)** counterclockwise to relieve the tension on the fan belts.

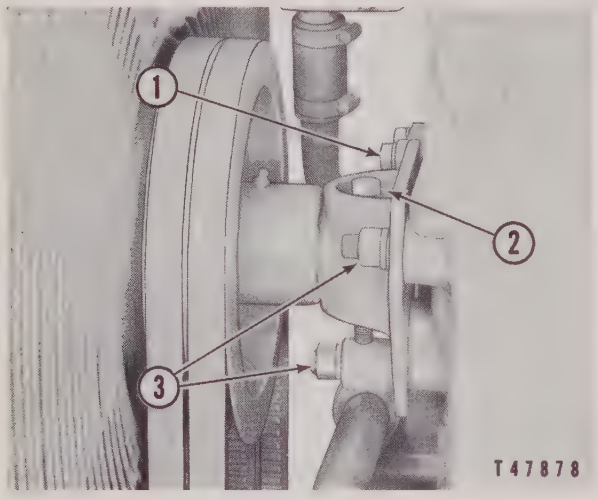

PREPARING TO REMOVE FAN BELTS
1–Bolt. 2–Adjusting screw. 3–Nuts.

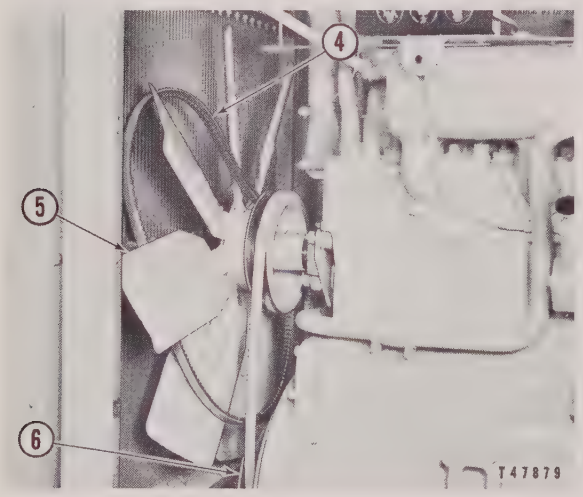

REMOVING FAN BELT
4–Fan belts. 5–Fan blades. 6–Crankshaft pulley.

3. Remove the fan belts **(4)** from the crankshaft pulley **(6)** and while rotating the fan slowly, slide each belt, one at a time, between the fan blades **(5)** and the radiator core.

4. Rotate the fan until the belt has completely passed to the radiator side of the fan and remove the belt.

FAN BELT ADJUSTMENT

Apply a 25 pound load to each belt at a point **(4)** midway between the fan and crankshaft pulleys and at right angles to the belt. Measure the deflection and compare with the dimension given in the topic, SPECIFICATIONS.

Adjust the belts, if necessary, by loosening the bolt **(1)** and nuts **(3)** and turning the adjusting screw **(2)** clockwise to tighten the belts or counterclockwise to loosen the belts.

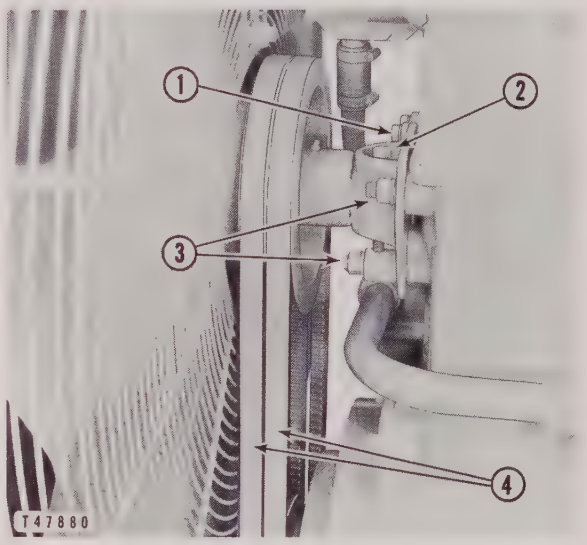

FAN BELT ADJUSTMENT
1–Bolt. 2–Adjusting screw. 3–Nuts. 4–Point midway between pulleys.

Check the adjustment after tightening the bolt **(1)** and nuts **(3)** to be certain the adjustment is correct.

Water Pump

INTRODUCTION

The water pump is a centrifugal type, located on the right side of the engine and is mounted on the front of the timing gear housing.

The pump is driven by the crankshaft gear through an idler gear and the water pump gear **(1)**. The drive gear and shaft are supported by bearings **(2)** and **(3)**. The pump is lubricated by oil sprayed into it from a tube from the timing gear lubrication system. See the topic, TIMING GEAR LUBRICATION SYSTEM.

An oil seal **(4)** prevents the lubricant from passing into the cooling system.

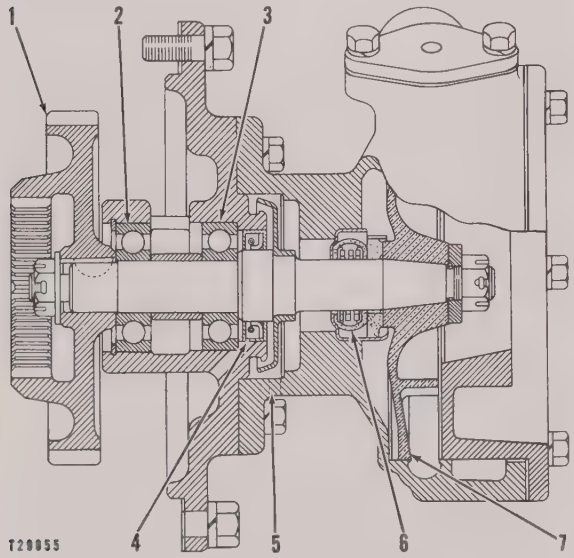

WATER PUMP (CROSS-SECTION)
1–Gear. 2–Bearing. 3–Bearing. 4–Oil seal. 5–Drain hole. 6–Water seal. 7–Impeller.

The water seal **(6)** prevents the loss of coolant from the cooling system. Leakage of water from the drain hole **(5)** indicates that the seal should be replaced.

The impeller **(7)** circulates the coolant through the cylinder block, cylinder head and radiator.

REMOVAL AND INSTALLATION

1. Drain the cooling system.
2. Disconnect the pump supply pipe **(7)**.
3. Remove the by-pass tube **(1)** and inlet elbow **(5)** as an assembly.

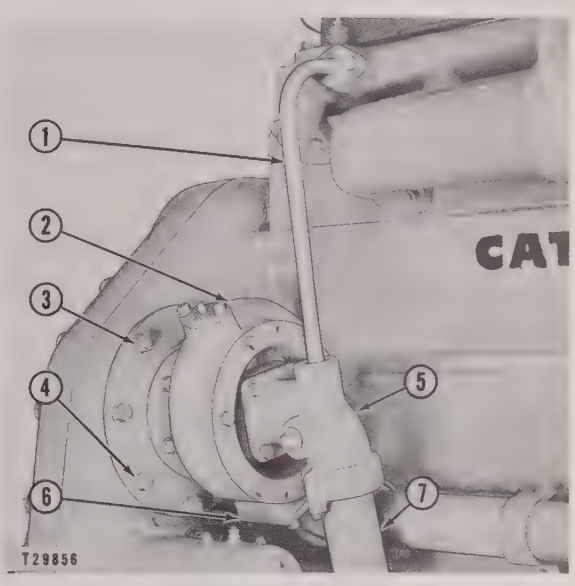

PREPARING TO REMOVE WATER PUMP
1–By-pass tube. 2–Water pump. 3–Nut. 4–Bolt. 5–Inlet elbow. 6–Discharge pipe. 7–Supply pipe.

4. Disconnect the pump discharge pipe **(6)**.
5. Remove the nuts **(3)** and bolt **(4)** that secure the water pump **(2)** to the timing gear housing.
6. Pull the water pump away from the timing gear housing as illustrated and place on a clean flat surface for disassembly.

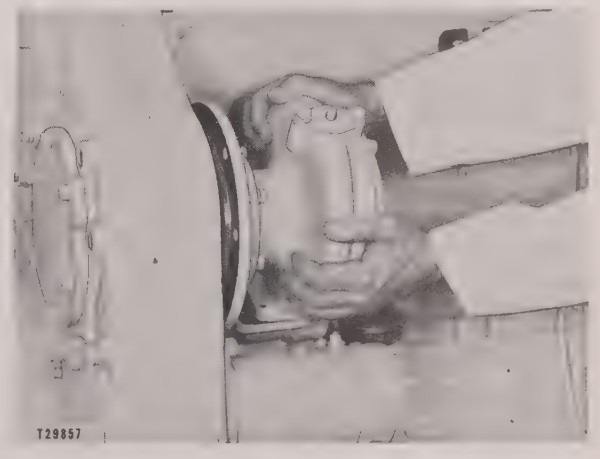

REMOVING WATER PUMP

7. Inspect all parts for wear or damage, clean all mating surfaces and using new gaskets, install in the reverse order of removal.

NOTE

When installing the pump, rotate the water pump drive gear slightly to insure proper meshing with the idler gear.

WATER PUMP SEAL AND INNER GREASE SEAL REPLACEMENT

Water leaking from the drain opening in the under side of the pump indicates that the water seal should be replaced.

The seal consists of a carbon thrust washer **(3)** and a spring enclosed by a bellows **(2)**. These two parts which make up the replaceable unit are contained in a brass case **(1)**, which is pressed into the water pump housing.

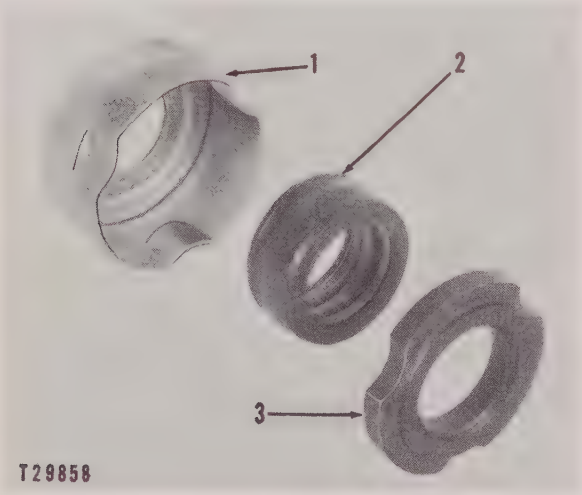

SEAL ASSEMBLY
1–Case. 2–Bellows. 3–Carbon thrust washer.

Remove the impeller according to the covering topic and inspect its bearing surface which contacts the carbon thrust washer. The contact surface must be smooth, free of roughness, nicks or burrs.

It is not necessary to remove the brass case from the water pump housing for seal replacement. The carbon thrust washer **(3)** and the bellows seal **(2)** can be removed from the brass case **(1)** by bending back the three ears holding them in place.

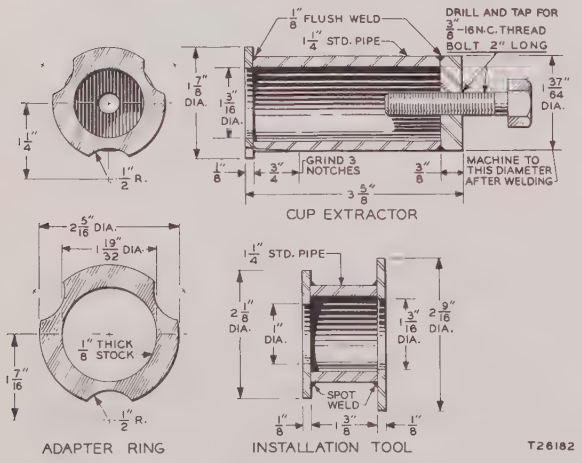

WATER SEAL CASE REMOVAL TOOL

When replacing the carbon thrust washer, be careful not to crack or scratch it. After the bellows seals and thrust washer are installed, see that the washer moves freely under finger pressure.

If the brass case is damaged, a tool, such as the one shown, can be made for removing it. If a tool is not used, it is necessary to completely disassemble the pump to replace the brass case.

When installing a new brass case, coat the case and housing bore with a lubricant to avoid shearing the brass case, and also to provide a positive seal against water leakage.

Make sure the case bottoms squarely in the bore so the carbon washer will bear evenly against the impeller contact surface.

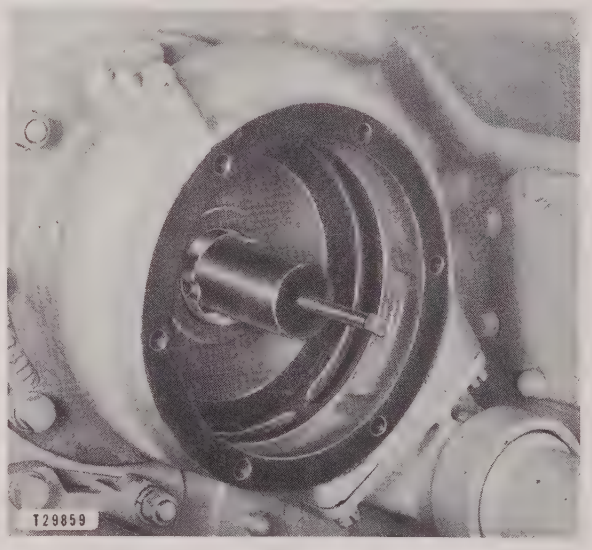

WATER SEAL CASE REMOVAL

CAUTION

The flange on the case can be bent if excessive pressure is applied after the case bottoms.

If it becomes necessary to replace the inner grease seal, the pump must be disassembled.

Press the old seal out and install a new one, with the lip of the seal toward the bearing.

WATER PUMP DISASSEMBLY AND ASSEMBLY

1. Remove the cover **(3)** from the housing **(5)**.
2. Remove the nut **(1)** and washer **(2)**.

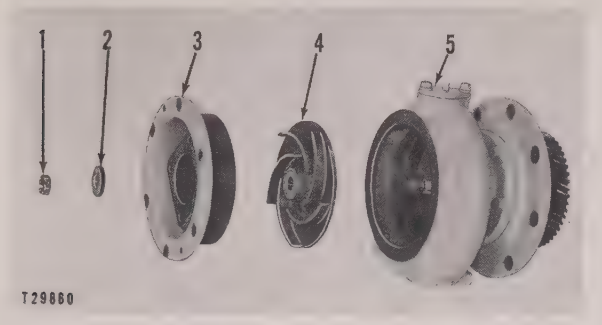

WATER PUMP DISASSEMBLY
1–Nut. 2–Washer. 3–Cover. 4–Impeller. 5–Housing.

3. Use the 5F7564 Puller and 8B7560 Spacer with two 5/16″-18 (NC) bolts six inches long, to pull the impeller **(4)** off the shaft. When replacing the impeller, tighten the nut to 55 lb. ft.

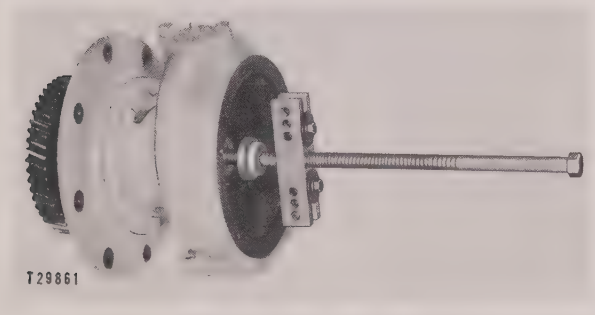

PULLING THE IMPELLER

4. The seal assembly **(7)** as well as the impeller, can be removed without removing the pump from the engine. See the topic, WATER PUMP SEAL AND INNER GREASE SEAL REPLACEMENT.

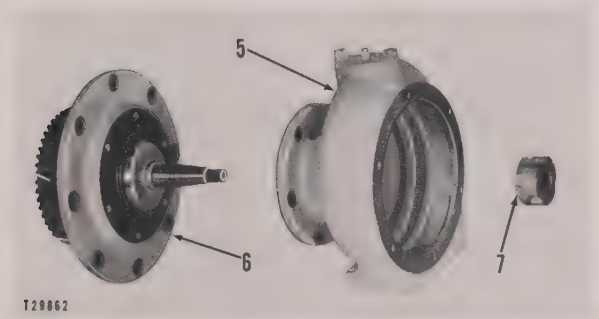

WATER PUMP DISASSEMBLY
5–Housing. 6–Adapter. 7–Seal assembly.

5. Remove the bolts which secure the adapter **(6)** to the housing **(5)**.
6. Remove the nut **(12)** and washer.
7. Using an 8B7546 Puller with an 8B7560 Spacer remove the gear **(8)**.
8. Remove the snap ring **(13)** and press the bearings **(9)** and **(11)**, and the spacer **(10)** off the shaft **(14)**.
9. Press the oil thrower **(16)**, the oil seal **(15)** and the adapter **(6)** off the other end of the shaft.

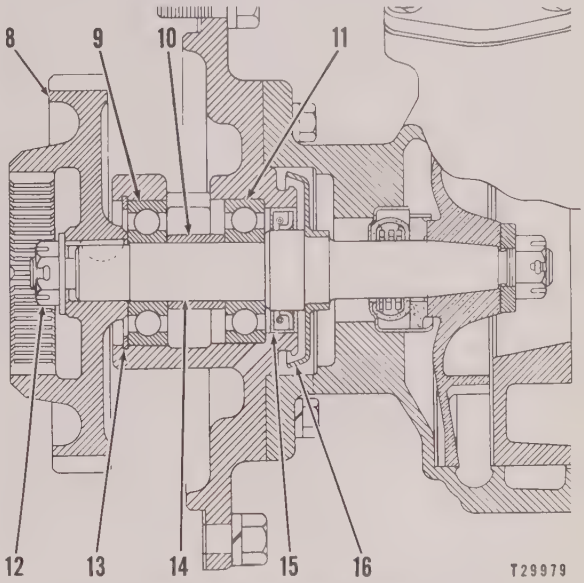

WATER PUMP DISASSEMBLY
8–Gear. 9–Bearing. 10–Spacer. 11–Bearing. 12–Nut. 13–Snap ring. 14–Shaft. 15–Oil seal. 16–Oil thrower.

10. Inspect the oil seal for wear or damage and replace it with the lip of the seal facing the bearing.
11. Assemble in the reverse order of disassembly.

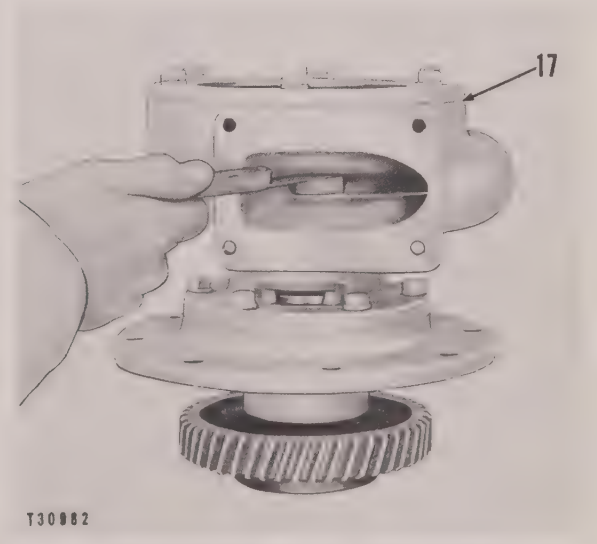

MEASURING IMPELLER CLEARANCE
17–Gasket.

CAUTION

The pump must turn freely when assembled.

12. Check the clearance between the impeller and the cover with a thickness gauge as illustrated. The clearance should be between .005″ and .020″. It can be increased or decreased by adding or removing gaskets **(17)**.

Water Pump

The water pump is a centrifugal type, located on the right side of the diesel engine and is mounted on the front of the timing gear housing.

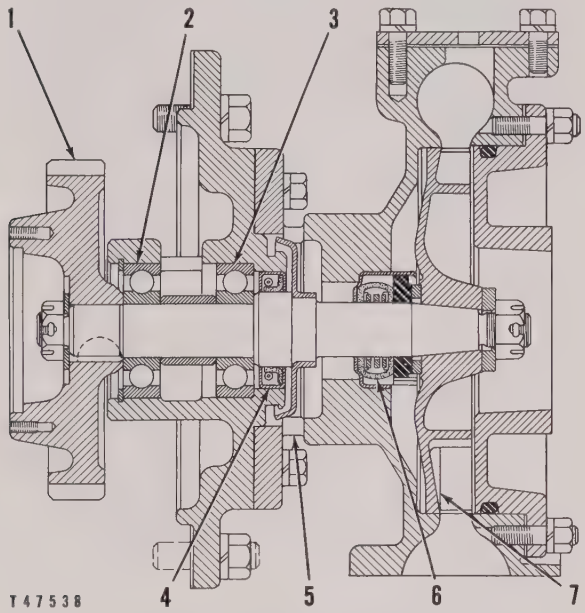

WATER PUMP CROSS SECTION
1–Gear. 2–Bearing. 3–Bearing. 4–Oil seal. 5–Drain opening. 6–Water seal. 7–Impeller.

WATER PUMP SEAL AND INNER OIL SEAL REPLACEMENT

Water leaking from the drain opening in the under side of the pump indicates that the water seal should be replaced.

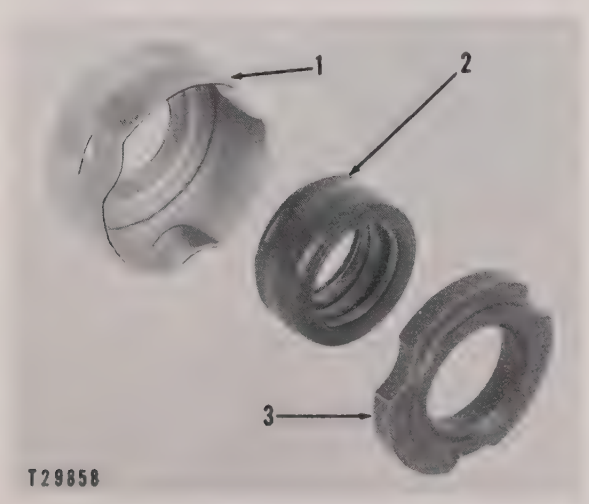

SEAL ASSEMBLY
1–Case. 2–Bellows. 3–Carbon thrust washer.

The seal consists of a carbon thrust washer **(3)** and a spring enclosed by a bellows **(2)**. These two parts which make up the replaceable unit are contained in a brass case **(1)**, which is pressed into the water pump housing.

Remove the impeller according to the covering topic and inspect its bearing surface which contacts the carbon thrust washer. The contact surface must be smooth, free of roughness, nicks or burrs.

It is not necessary to remove the brass case from the water pump housing for seal replacement. The carbon thrust washer **(3)** and the bellows seal **(2)** can be removed from the brass case **(1)** by bending back the three ears holding them in place.

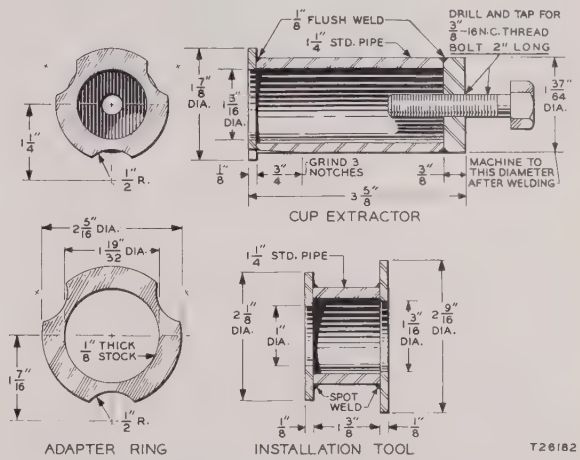

WATER SEAL CASE REMOVAL TOOL

When replacing the carbon thrust washer, be careful not to crack or scratch it. After the bellows seal and thrust washer are installed, see that the washer moves freely under finger pressure.

If the brass case is damaged, a tool, such as the one shown, can be made for removing it. If a tool is not used, it is necessary to completely disassemble the pump to replace the brass case.

When installing a new brass case, coat the case and housing bore with a lubricant to avoid shearing the brass case, and also to provide a positive seal against water leakage.

Make sure the case bottoms squarely in the bore so the carbon washer will bear evenly against the impeller contact surface.

CAUTION

The flange on the case can be bent if excessive pressure is applied after the case bottoms.

If it becomes necessary to replace the inner oil seal, the pump must be disassembled.

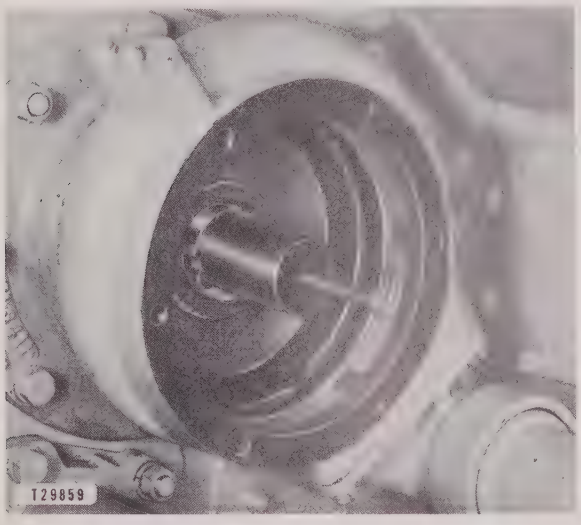

WATER SEAL CASE REMOVAL

Press the old seal out and install a new one, with the lip of the seal toward the bearing.

REMOVAL AND INSTALLATION

Drain the cooling system.

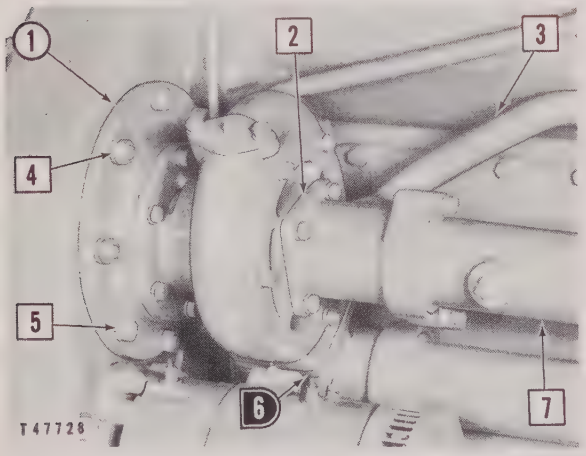

PREPARING TO REMOVE WATER PUMP

☐ Remove ◗ Disconnect

1–Water pump and adapter. 2–Adapter. 3–By-pass line. 4–Nuts (four). 5–Bolts (four). 6–Elbow. 7–Water pump supply line.

Pull the water pump and adapter **(1)** away from the timing gear housing as shown.

Inspect and replace all damaged gaskets before installation.

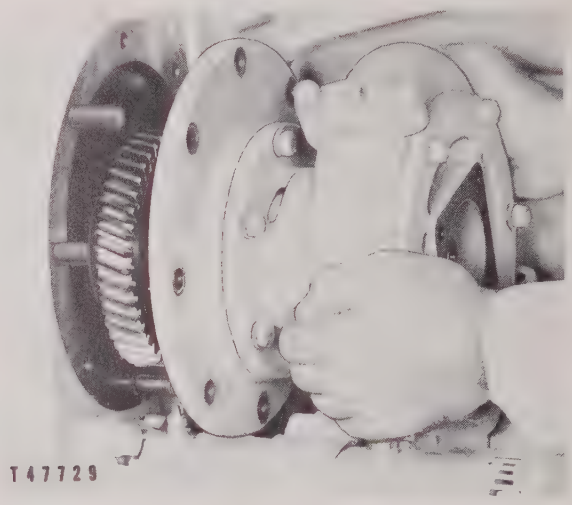

WATER PUMP REMOVAL

DISASSEMBLY AND ASSEMBLY

1. Remove the nuts and washers that secure the cover **(2)** to the water pump.
2. Install two 3/8″ - 16 (NC) bolts **(1)** of suitable length in the tapped holes provided and remove the cover **(2)**. Inspect the O-ring seal **(4)** and replace if damaged.

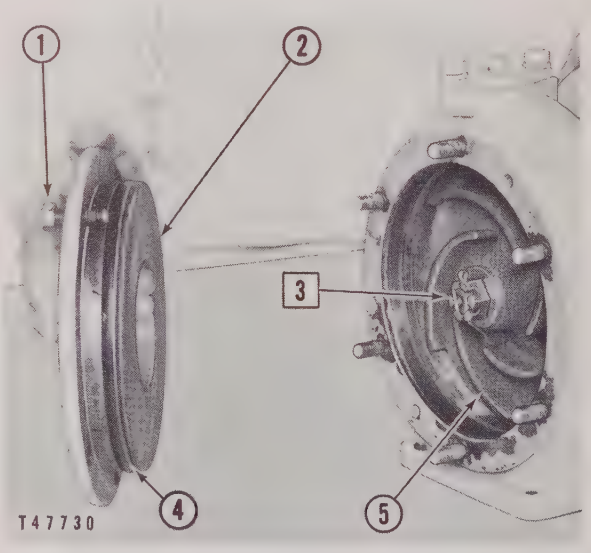

WATER PUMP DISASSEMBLY

☐ Remove

1–Bolt. 2–Cover. 3–Nut and washer. 4–O-ring seal. 5–Impeller.

3. Use the 5F7465 Puller and 8B7560 Spacer with two 5/16″ - 18 (NC) bolts six inches long, to pull the impeller **(5)** off the shaft.
4. The seal assembly **(7)** as well as the impeller, can be removed without removing the pump

from the engine. See the topic, WATER PUMP SEAL AND INNER OIL SEAL REPLACEMENT.

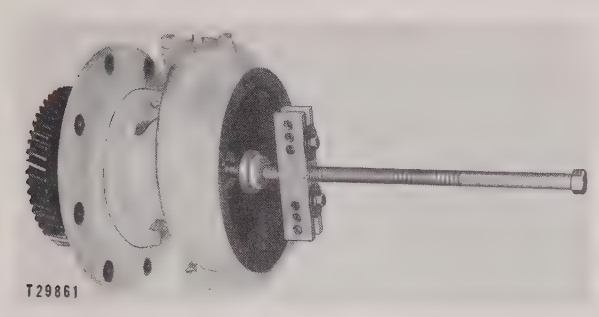

PULLING THE IMPELLER

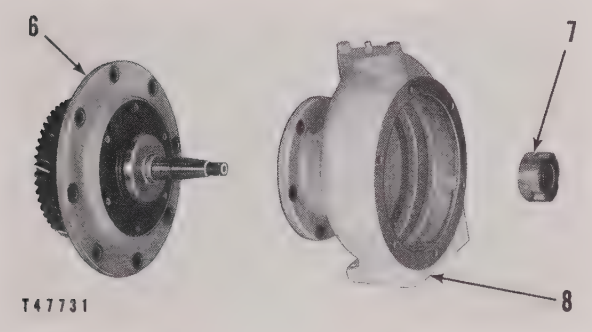

WATER PUMP DISASSEMBLY
6–Adapter. 7–Seal assembly. 8–Housing.

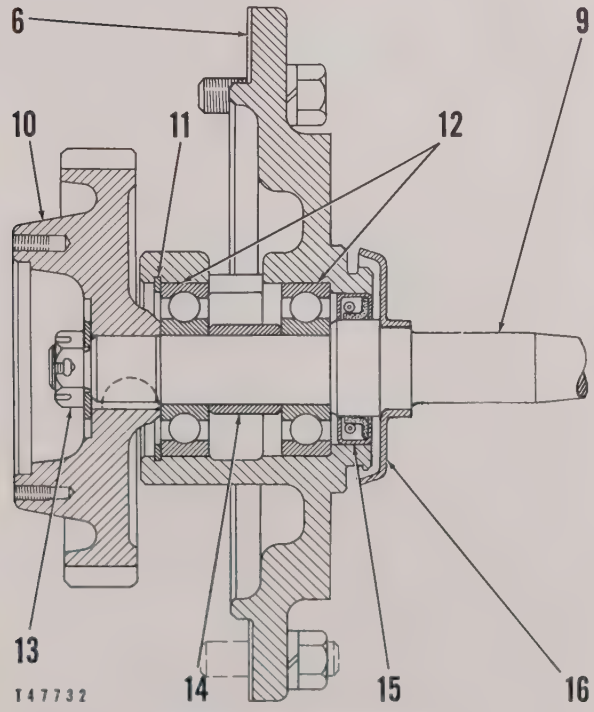

WATER PUMP DISASSEMBLY
6–Adapter. 9–Shaft. 10–Gear. 11–Snap ring. 12–Bearings. 13–Nut and washer. 14–Spacer. 15–Oil seal. 16–Oil thrower.

5. Remove the bolts which secure the adapter **(6)** to the housing **(8)**.
6. Remove the nut and washer **(13)** and using the 8H700 Puller with an 8B7560 Spacer pull the gear **(10)** from the shaft **(9)**.
7. Remove the snap ring **(11)**, support the adapter and shaft assembly with the tapered end of the shaft down, and press the shaft **(9)** down through the bearings **(12)**, spacer **(14)** and adapter **(6)**.
8. Press the oil thrower **(16)** from the shaft **(9)**.
9. Inspect the oil seal **(15)** and replace if damaged. Install the new seal with the lip of the seal facing the bearing.
10. Inspect all parts for wear or damage before reassembling the water pump.
11. Tighten the impeller nut to the specified torque value and check the clearance between the cover and the impeller as shown. See the topic, SPECIFICATIONS, for the torque value and the clearance dimension.

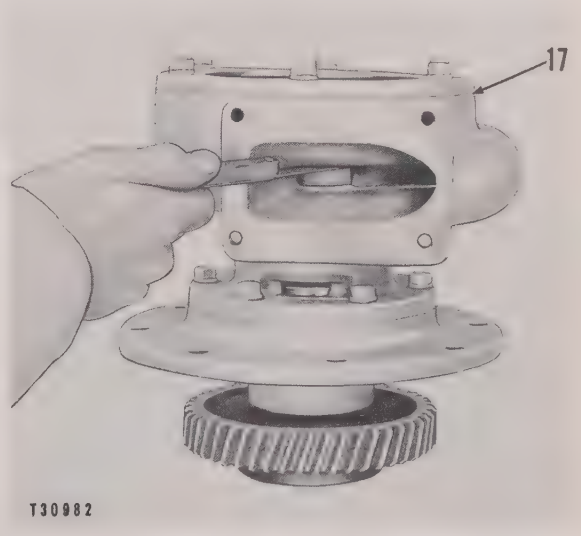

MEASURING IMPELLER CLEARANCE
17–Gasket.

Raw Water Pump

The raw water pump forces water through the heat exchanger where it absorbs heat from the engine cooling system through the tubes of the heat exchanger.

The pump is of the centrifugal type and is gear driven from the fresh water pump drive. It is located at the rear of the engine and on the right side.

A chamber on top of the pump housing holds a supply of water which primes the pump at the start of pumping action.

REMOVAL AND INSTALLATION

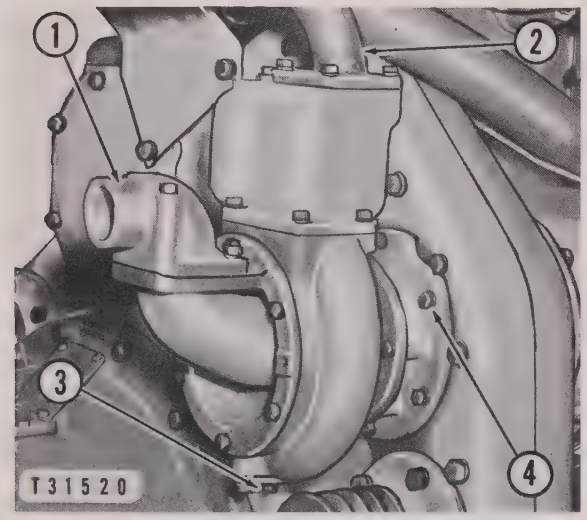

PREPARING TO REMOVE THE RAW WATER PUMP
1–Inlet elbow. 2–Outlet line. 3–Plug. 4–Bolt.

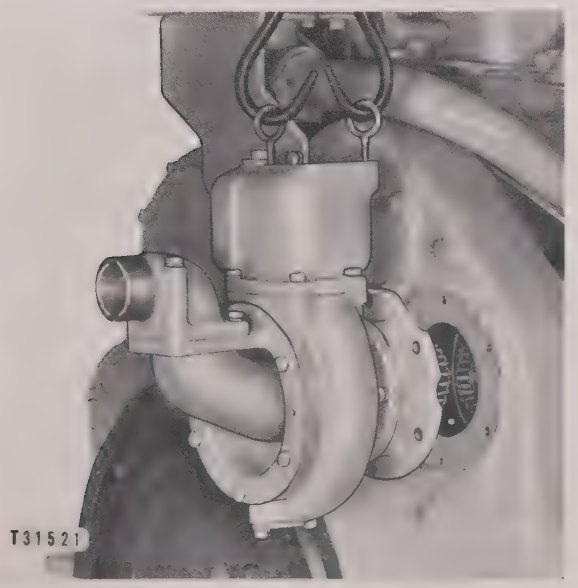

WATER PUMP REMOVAL

1. Drain the raw water system by removing the plug **(3)** at the bottom of the raw water pump.
2. Remove the inlet line from inlet elbow **(1)** and the outlet line **(2)**.
3. Attach a suitable hoist, remove bolts **(4)** and remove the raw water pump.
4. Install in the reverse order of removal, replacing all damaged gaskets.

DISASSEMBLY

1. Remove the chamber **(14)**, the elbow **(15)** and the cover **(8)**.
2. Bend the lock **(13)** and remove the impeller nut **(7)**, the lock **(13)**, the washer **(6)** and the gasket **(12)**.
3. Use the 5F7466 Puller and the 8B7560 Spacer with two 5/16″ — 24 (NF) bolts six inches long to remove the impeller **(5)**. When replacing the impeller, tighten the nut to the value specified in the topic, SPECIFICATIONS.
4. Remove the gasket **(11)** and the seal plate **(4)**.

NOTE

Steps one through five do not require the removal of the pump from the engine.

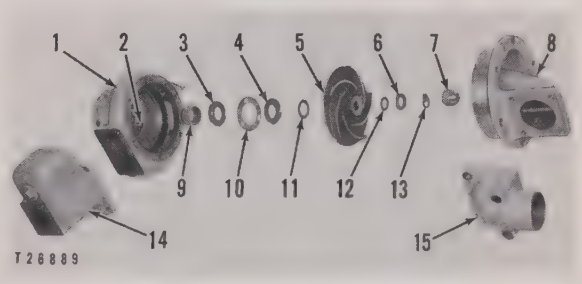

RAW WATER PUMP DISASSEMBLY
1–Pump body. 2–Pin. 3–Seal plate assembly. 4–Seal plate. 5–Impeller. 6–Washer. 7–Impeller nut. 8–Cover. 9–Seal assembly. 10–Retaining ring. 11–Gasket. 12–Gasket. 13–Lock. 14–Chamber. 15–Elbow.

5. Remove the retainer pins from the pins **(2)**, slip off the retaining ring **(10)**, remove the seal plate assembly **(3)** and remove the seal assembly **(9)** from the pump body **(1)**.
6. Remove the bolts which hold the adapter to the pump body and separate the shaft assembly and adapter from the pump body.

7. Remove the nut **(16)** and washer which secure the gear to the pump shaft.

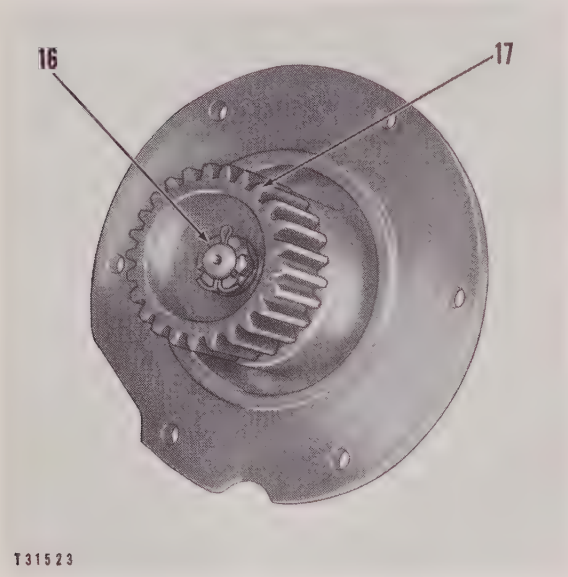

ADAPTER DISASSEMBLY
16–Nut. 17–Gear.

8. Remove the gear **(17)** using the 8H663 Bearing Pulling Attachment, the 8B7548 Push Puller and the T774 Spacer.
9. Remove the key which holds the gear in place on the shaft.

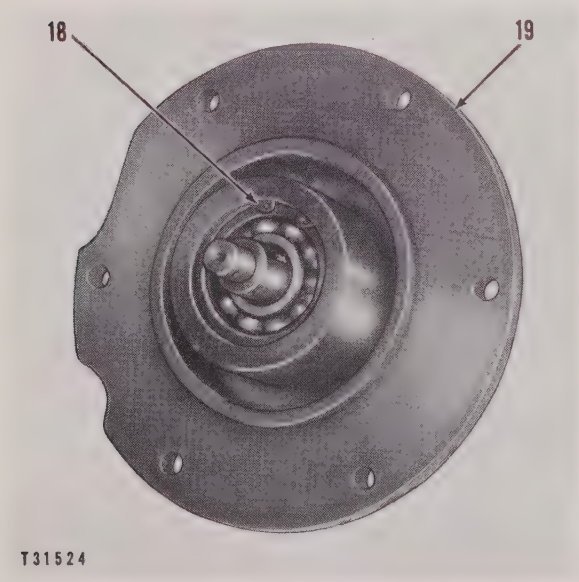

ADAPTER DISASSEMBLY
18–Snap ring. 19–Adapter.

10. Remove the snap ring **(18)**, then press the shaft and bearings out of the adapter **(19)**. This same pressing action will free the thrower on the other end of the shaft.

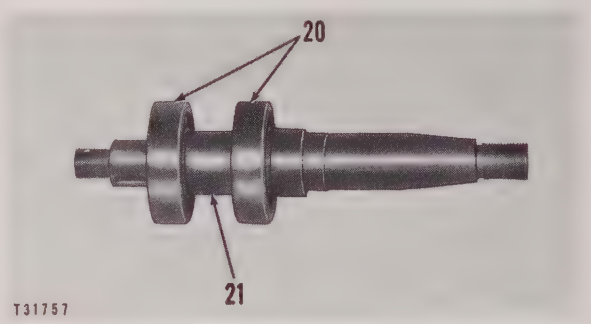

BEARING REMOVAL
20–Bearings. 21–Spacer.

11. Press the bearings **(20)** and the spacer **(21)** from the shaft and replace the bearings if worn or damaged.
12. Inspect the seal **(22)**.

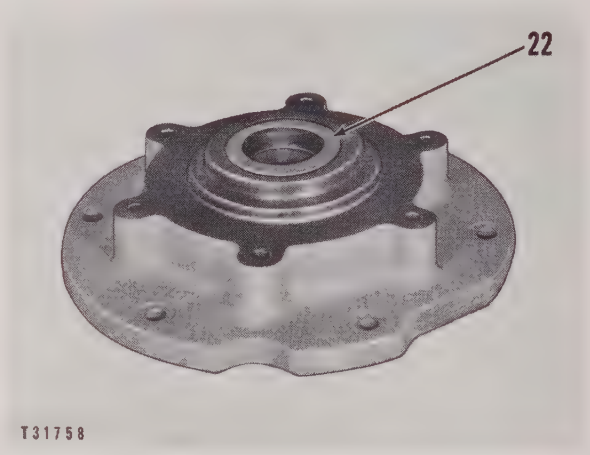

SEAL REPLACEMENT
22–Seal.

ASSEMBLY

If the oil seal **(9)** is worn or damaged, install a new one with the lip facing the bearing.

CAUTION

The pump must turn freely when assembled. Check the clearance between the impeller **(6)** and the cover **(12)** with a thickness gauge, as illustrated. For the correct clearance value, see the topic, SPECIFICATIONS. The clearance can be increased or decreased by adding or removing gaskets at **(11)**.

Replace all other worn or damaged seals and gaskets.

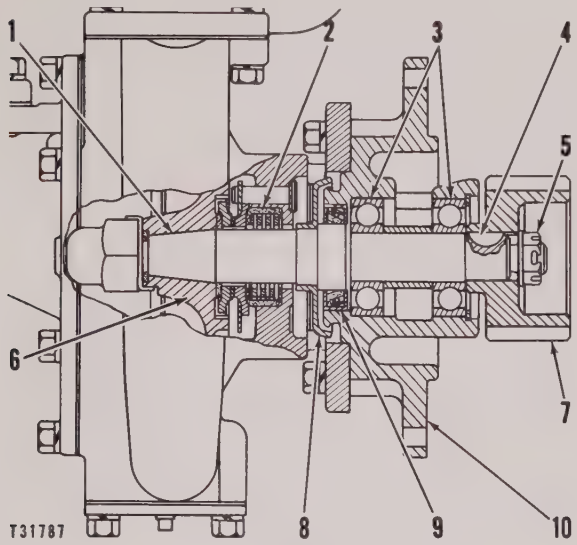

RAW WATER PUMP
(Cross Section)
1–Shaft. 2–Seal. 3–Bearings. 4–Key. 5–Locknut.
6–Impeller assembly. 7–Gear. 8–Thrower.
9–Oil seal. 10–Adapter.

Assemble in reverse order of disassembly.

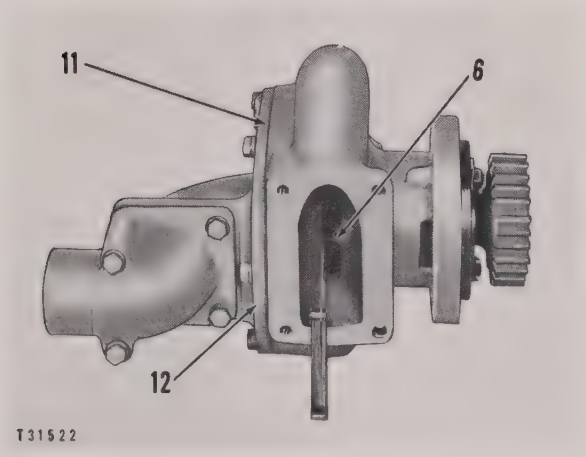

RAW WATER PUMP ASSEMBLY
6–Impeller. 11–Gasket. 12–Cover.

Raw Water Pump

The raw water pump is mounted on the rear of the timing gear housing immediately behind the fresh water pump. The drive gear **(5)** meshes with the internal gear **(6)** which is bolted to the fresh water pump drive gear.

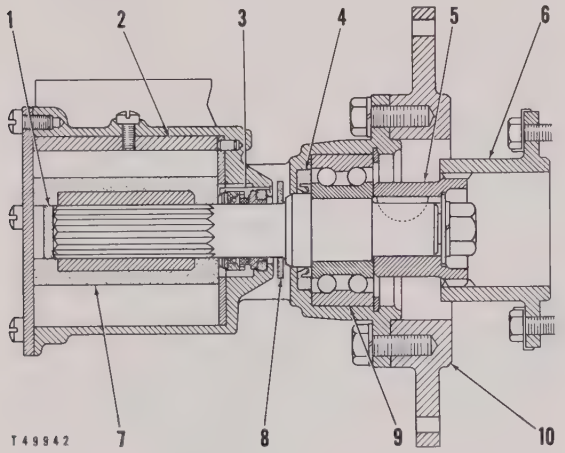

RAW WATER PUMP
1–Seal. 2–Cam. 3–Water seal assembly. 4–Grease seal. 5–Drive gear. 6–Internal gear. 7–Impeller. 8–Slinger. 9–Bearing. 10–Adapter.

REMOVAL AND INSTALLATION

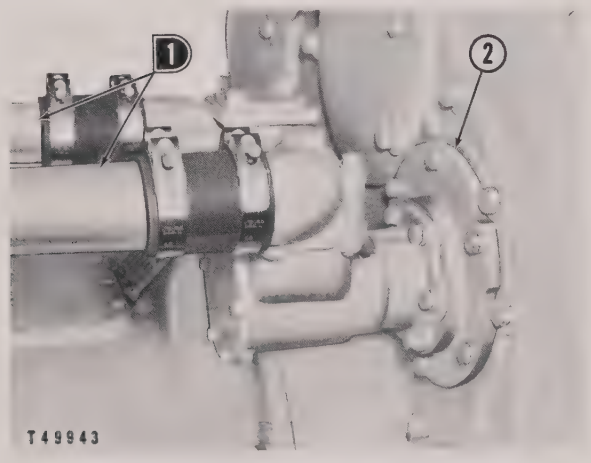

PREPARING TO REMOVE RAW WATER PUMP

Disconnect

1–Raw water lines. 2–Adapter.

Remove the bolts securing the adapter **(2)** to the timing gear housing and remove the raw water pump and adapter as a unit.

The internal gear **(4)** can be removed by removing the four bolts securing it to the fresh water pump drive gear **(3)**.

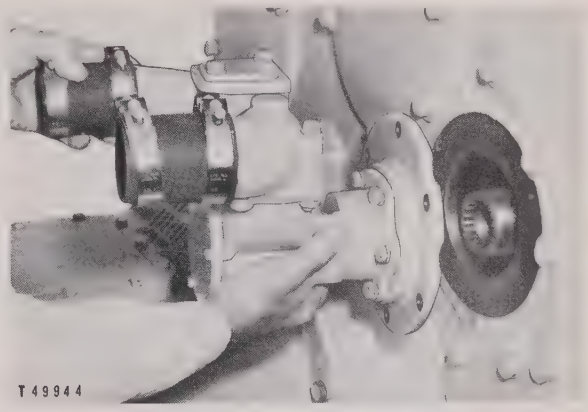

REMOVING RAW WATER PUMP

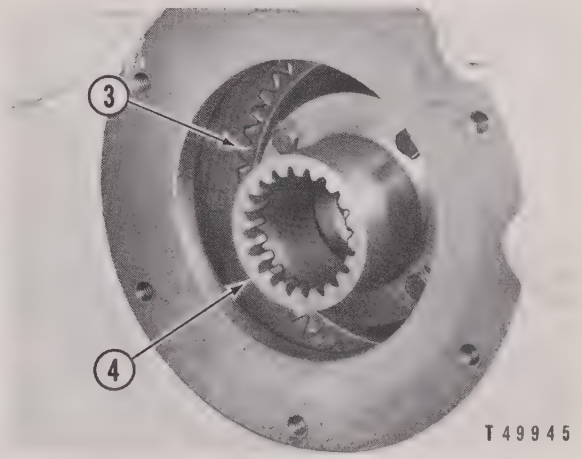

PREPARING TO REMOVE INTERNAL GEAR
3–Fresh water pump drive gear.
4–Internal gear.

DISASSEMBLY AND ASSEMBLY

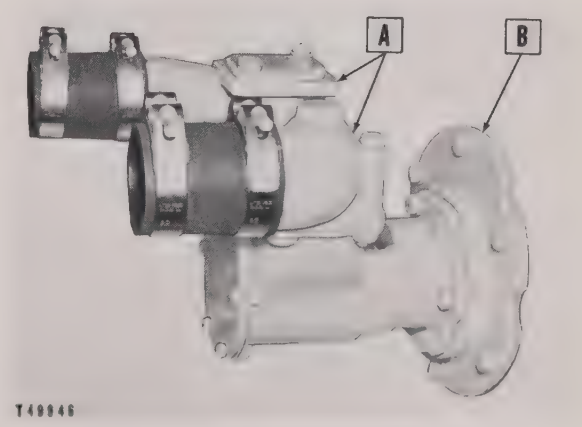

PREPARING FOR PUMP DISASSEMBLY

Remove

A–Inlet and outlet elbows. B–Adapter.

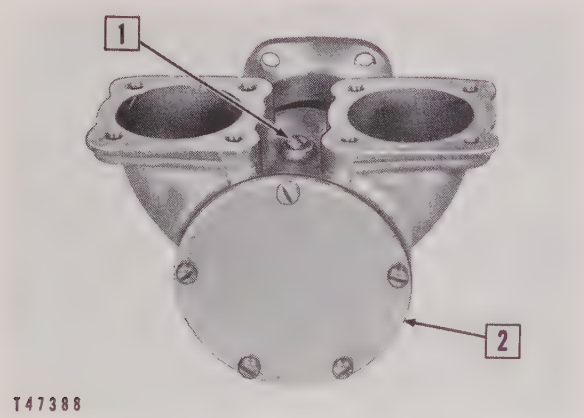

PREPARING TO DISASSEMBLE PUMP

☐ Remove

1–Screw. 2–Cover.

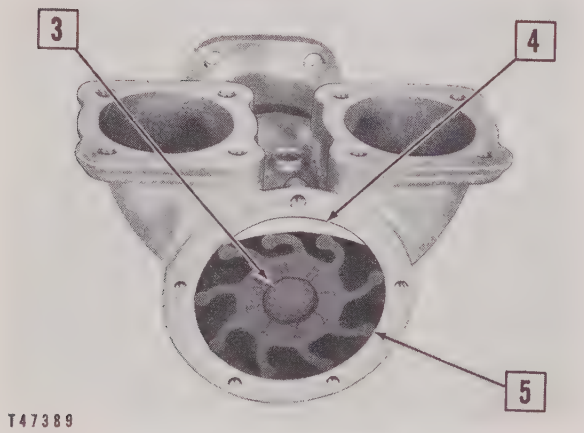

IMPELLER REMOVAL

☐ Remove

3–Seal. 4–Cam. 5–Impeller.

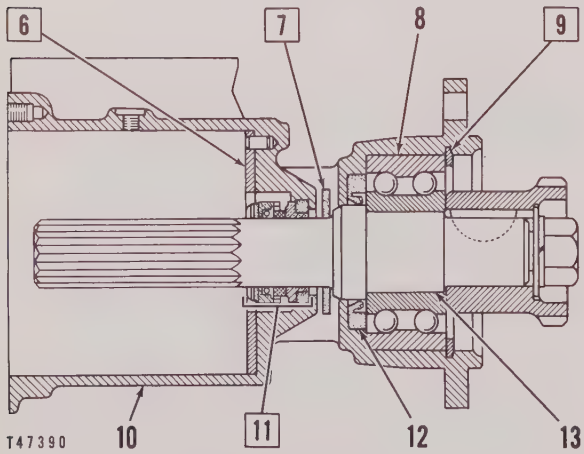

PUMP DISASSEMBLY

☐ Remove

6–Wear plate. 7–Slinger. 8–Bearing. 9–Snap ring. 10–Pump body. 11–Seal assembly. 12–Grease seal. 13–Shaft assembly.

Press the bearing **(8)** and shaft assembly **(13)** from the pump body **(10)** with the aid of an arbor press.

NOTE

The bearing **(8)** is packed with grease at the factory and requires no further lubrication.

Inspect the grease seal **(12)** and replace if necessary. Install with the lip of the seal facing the bearing **(8)**.

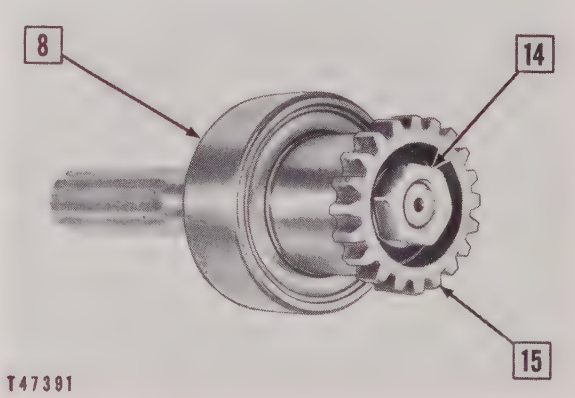

DISASSEMBLY OF SHAFT ASSEMBLY

☐ Remove

8–Bearing. 14–Nut, lockwasher and washer. 15–Gear and key.

Radiator

REMOVAL

1. Drain the radiator, and disconnect the water lines **(2)** and **(3)** from the radiator **(1)**.

2. Remove the fan guard.

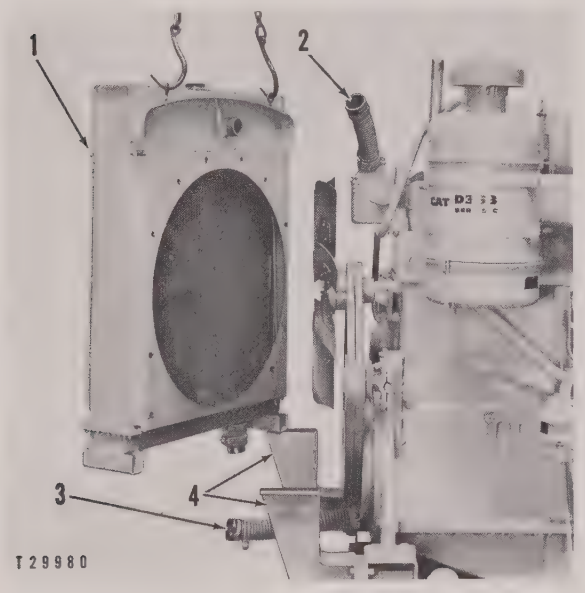

RADIATOR REMOVAL
1–Radiator. 2–Line. 3–Line. 4–Mounting bracket.

3. Install suitable eyebolts as shown.

4. Use a hoist to support the weight of the radiator and remove the bolts that secure the radiator to the mounting brackets **(4)**.

5. Remove the radiator.

RADIATOR DISASSEMBLY

1. Remove the radiator front guard and rear shield.

2. Remove the strips **(1)** and **(7)** from the front and rear of the radiator.

3. Remove the top tank **(2)** and the water overflow line.

4. Remove the side plates **(3)** and **(4)**.

5. Lift the radiator core **(5)** from the bottom tank **(6)**.

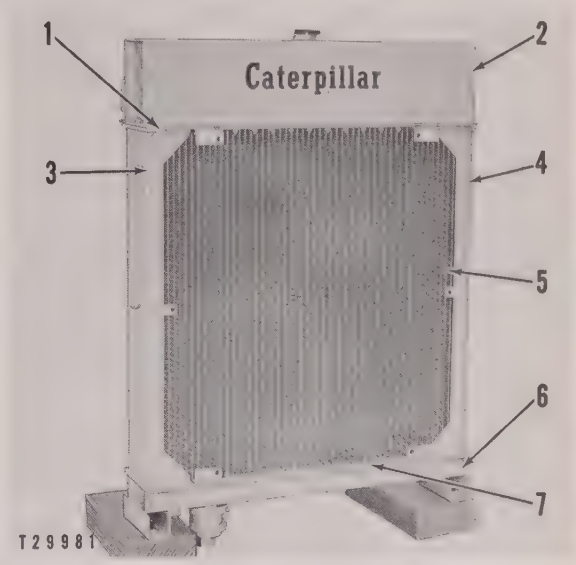

PREPARING TO DISASSEMBLE THE RADIATOR
1–Strip. 2–Top tank. 3–Side plate. 4–Side plate. 5–Radiator core. 6–Bottom tank. 7–Strip.

ASSEMBLY OF THE RADIATOR

Before assembling the radiator, inspect all gaskets and sealing surfaces.

Clean the radiator core of all accumulations of debris between the fins and tubes with water or compressed air. Such accumulations decrease the efficiency of the cooling system and may cause the engine to overheat.

The inside of the radiator core, bottom tank, and the top tank should be cleaned with a solution of sal soda.

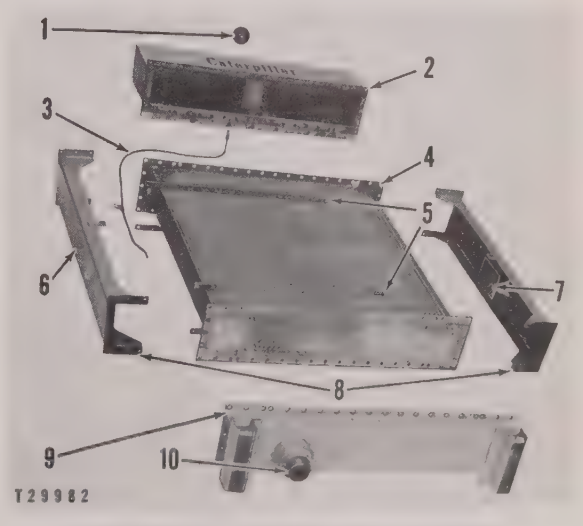

PREPARING TO ASSEMBLE THE RADIATOR
1–Cap. 2–Top tank. 3–Overflow line. 4–Radiator core. 5–Strips. 6–Setscrew. 7–Centering pad. 8–Side plates 9–Bottom tank. 10–Coolant outlet.

1. Place the bottom tank **(9)** on blocks to prevent damage to the coolant outlet **(10)**.
2. With the gasket in place on the bottom tank **(9)**, lower the radiator core **(4)** onto the bottom tank **(9)**.

NOTE

The centering pads **(7)** on the side plates locate the core in the radiator assembly. These pads are adjusted by the setscrew **(6)** at the factory and need no further adjustment.

3. Install the side plates **(8)** to the bottom tank, but do not tighten the bolts.
4. Position the top tank **(2)** with the gasket on the radiator core and start the bolts into the side plates.
5. Install the strips **(5)** in the front and rear of the radiator, tightening them down evenly to avoid leaks.
6. Install the water overflow line **(3)**.
7. Install the rear shield and the front guard.
8. Test the radiator for possible leaks before installing the radiator on the engine. This can be accomplished by plugging both the inlet and outlet openings and filling the radiator with water. Leave the water in the radiator for a long enough period of time to detect any seepage that might occur.

RADIATOR CAP PRESSURE VALVE

A pressure valve built into the radiator cap permits a limited pressure in the cooling system.

Due to expansion of the coolant by rising temperature, a pressure will be built up in the system each time the engine is started. When the pressure rises above 4 PSI, the seal **(2)** is lifted off the filler neck **(3)** of the radiator to relieve the pressure, or if the cooling system has been overfilled, allow some coolant to escape through the radiator overflow tube. The valve closes when the temperature of the coolant levels off and remains closed unless there is a further increase in pressure.

When the temperature of the coolant falls, a vacuum will be built up in the cooling system. As soon as the pressure, in the system becomes less than atmospheric pressure, the vacuum relief valve **(1)** opens and allows air to enter through the overflow tube. This vacuum relief valve also functions when draining the cooling system.

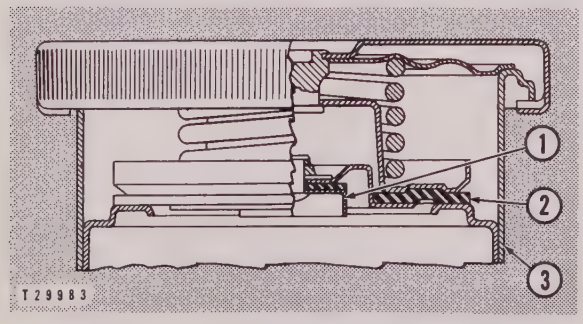

RADIATOR CAP PRESSURE VALVE
1–Vacuum relief valve. 2–Seal. 3–Filler neck.

Lubricating System

FLOW OF LUBRICATING OIL

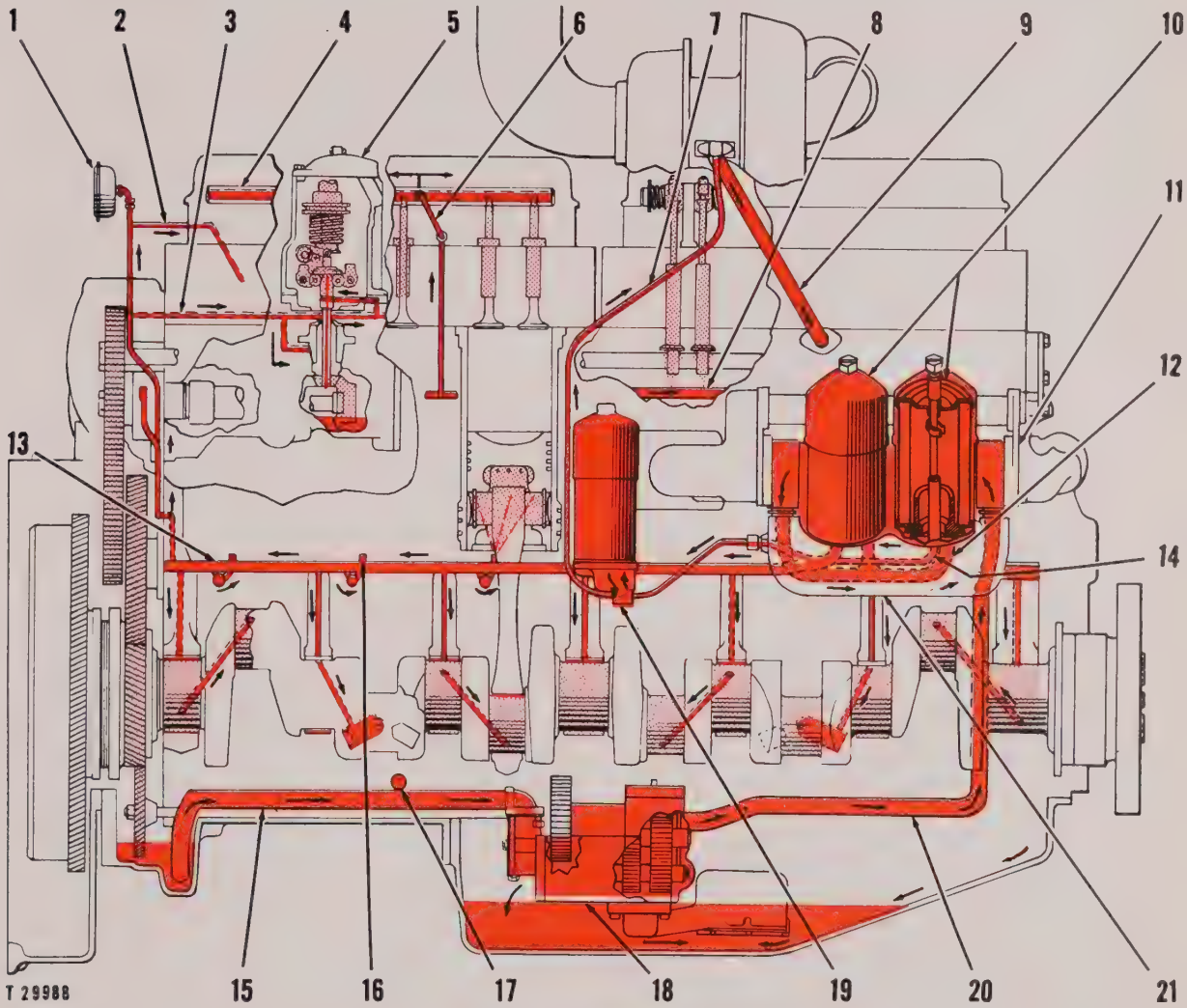

FLOW OF LUBRICATING OIL

1–Oil pressure gauge. 2–Passage. 3–Passage. 4–Shaft. 5–Governor. 6–Tube. 7–Tube. 8–Tube. 9–Tube. 10–Filter assemblies. 11–Oil cooler. 12–Passage. 13–Oil manifold. 14–Passage. 15–Tube. 16–Oil jet tube. 17–Starting engine oil return hole. 18–Oil pump. 19–Turbocharger oil filter. 20–Tube. 21–Oil filter base.

A two-section oil pump **(18)**, mounted in the oil pan and driven by the crankshaft gear, supplies lubricating oil to the engine and provides for scavenging the sump at the rear of the oil pan. The tube **(15)** returns oil through a screen into the center sump. This screen is located in the pump body. Oil is picked up through the main suction bell and delivered, by the pump, to all lubricated parts of the engine.

Lubricating oil under pressure is delivered by the oil pump **(18)** to the oil filter base **(21)** by tube **(20)**. From the filter base, the oil flows through the oil cooler **(11)** and back to the filter base. Cored passages **(12)** in the filter base direct the oil to the filter assemblies **(10)** where it is filtered. The filtered oil passes through cored passages **(14)** in the filter base to the oil manifold **(13)**.

A tube carries filtered oil from the passage in the filter base to the turbocharger oil filter **(19)**. Oil from the turbocharger filter flows through tube **(7)** to the turbocharger bearings. A mixture of oil and bleed air is carried back to the engine block by tube **(9)**.

Drilled passages from the oil manifold carry oil to each main bearing. Drilled passages in the crank-

shaft feed oil from the main bearings to the connecting rod bearings. Oil jet tubes **(16)** connected to the oil manifold spray oil into the inside of the piston for lubrication of the piston pin and for cooling the pistons.

Drilled passages at the rear of the oil manifold carry oil to the timing gears. See the topic, TIMING GEAR LUBRICATION.

Drilled passages and tubes from the rear of the oil manifold distribute oil for lubrication of the camshaft and valve mechanism. A tube **(8)** is pressed into the camshaft compartments and sprays oil on the cam lobes through orifices drilled in the tube. Camshaft bearings are also provided with oil by the tube **(8)**. Passages and tubes **(6)** carry oil from tube **(8)** to the rocker arm shaft **(4)**, to lubricate the rocker arm assemblies, valve stem bushings, push rods and valves lifters.

Drilled passages and tubes from the rear of the oil manifold provide oil for the governor **(5)** and fuel injection pump camshaft. A branch passage from passage **(3)** provides oil for the oil pressure gauge **(1)**. Another branch provides oil to the governor spindle and splash oil for the governor drive gear and other governor components. Passage **(3)** continues on to a spray tube which lubricates the fuel injection pump camshaft lobes and bearings.

The tube **(2)** provides oil to the starting engine common lubrication system. Oil is returned from the starting engine crankcase to the diesel engine crankcase through the return hole **(17)**.

After the oil has been circulated throughout the engine, it drains into the oil pan. Oil in the rear sump is picked up by tube **(15)** and delivered by the scavenge pump to the main sump.

The engine is protected from damage due to plugged filters or oil cooler by by-pass valves in those lines. The engine is protected from excess pressure by a relief valve in the outlet side of the pump. See the covering topics for information on the by-pass valves.

TIMING GEAR LUBRICATION

Oil under pressure flows from the manifold **(8)** through a passage to the camshaft rear bearing **(9)**.

The tube **(11)** carries the oil from the manifold to the junction block **(16)** where the oil is directed through passages **(5)** and **(7)** to lubricate the camshaft idler gear bearing **(6)**.

A portion of the oil flows from the junction block to the tube **(4)**, and then to the passage **(1)**, which lubricates the accessory drive housing and all assemblies mounted on, or in the accessory drive housing.

The fuel pump and governor drive bearing **(13)** is lubricated through the passage **(1)**, the groove **(10)** cut around the outer edge of the accessory drive housing, and a passage through the housing.

Oil returns from the accessory drive housing through the opening **(15)** to the engine crankcase.

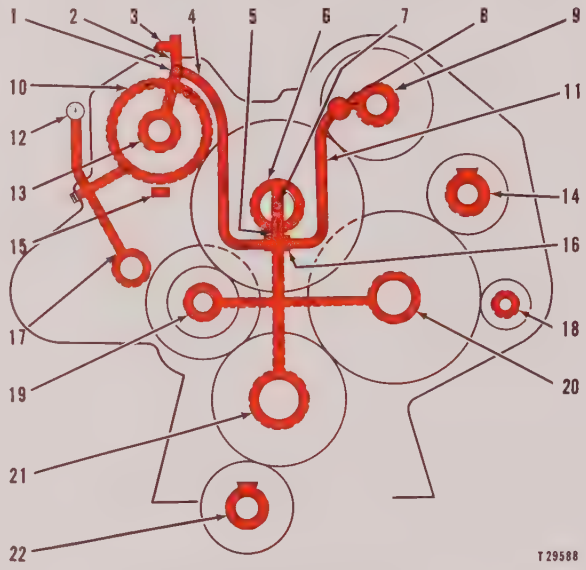

TIMING GEAR LUBRICATION

1–Passage. 2–Passage. 3–Tube. 4–Tube. 5–Passage. 6–Camshaft idler gear bearing. 7–Passage. 8–Manifold. 9–Camshaft rear bearing. 10–Groove. 11–Tube. 12–Oil pressure gauge. 13–Fuel pump and governor drive bearing. 14–Water pump bearing. 15–Opening. 16–Junction block. 17–Drilled passage. 18–Generator rear bearing. 19–Idler gear bearing. 20–Idler gear bearing. 21–Rear main bearing. 22–Oil pump drive gear bearings.

The oil is carried under pressure from the groove **(10)** through passages in the timing gear housing to the engine oil pressure gauge **(12)** and to the drilled passage **(17)**, which delivers oil to lubricate any other accessory such as an air compressor, that may be installed at this point.

The passage **(2)** in the timing gear housing delivers oil to the tube **(3)** which supplies oil to the common lubrication system of the starting engine.

Oil is carried from the junction block **(16)** through passages to lubricate the idler gear bearings **(19)** and **(20)** and the rear main bearing **(21)**.

The water pump bearing **(14)** is splash lubricated through an opening cast in the water pump housing. The generator rear bearing **(18)** is packed and must be disassembled for repacking.

The oil pump drive gear bearings **(22)** are splash lubricated by openings cast in the oil pump drive shaft brackets.

OIL PRESSURE

When the engine is warm and running at rated speed, the gauge should register in the "operating range." A lower pressure reading is normal at low idling speeds.

If for any reason the oil gauge registers no pressure, the engine should be stopped immediately until the difficulty can be determined and corrected.

A small orifice in the gauge connection prevents rapid gauge fluctuation. This orifice should be checked for dirt, in the event the gauge becomes inoperative.

If the oil pressure gauge indicates low or no oil pressure, check for the following:

1. Low oil level.
2. Clogged oil filters.
3. Defective oil gauge, or a clogged or broken tube to the gauge.
4. Clogged oil pump screen.
5. Leaking connections.
6. Loose bearings.
7. Pressure regulating valve worn or stuck open, thus allowing oil to be by-passed into the oil pan.
8. Worn oil pump gears.
9. Clogged oil cooler, possibly causing excessively high oil temperatures, resulting in low viscosity and consequently low oil pressure.

Lubricating System

FLOW OF LUBRICATING OIL

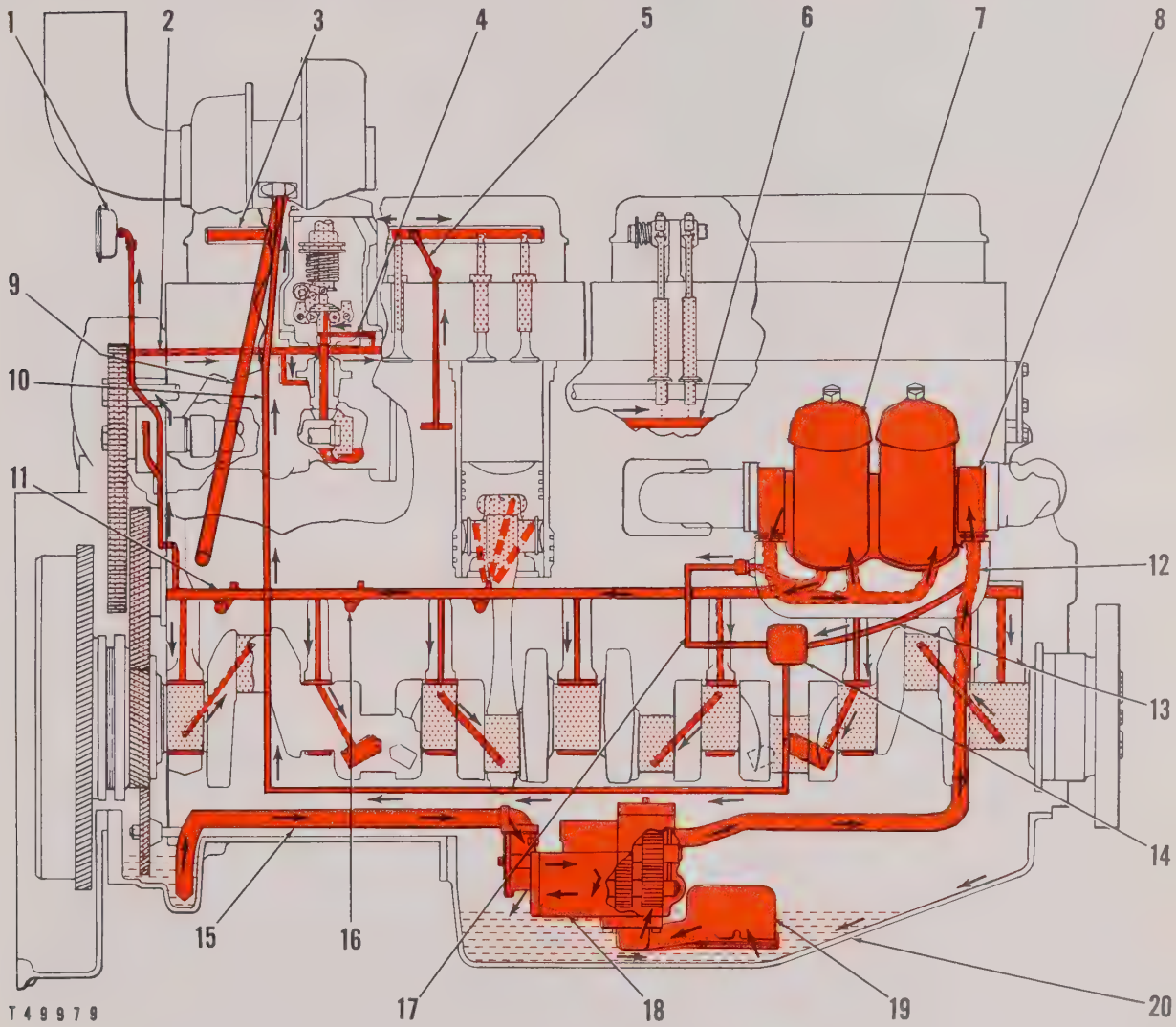

FLOW OF LUBRICATING OIL (SCHEMATIC)

1–Oil pressure gauge.
2–Oil line to fuel injection pump manifold.
3–Oil passage in rocker arm shaft.
4–Oil passage in governor lower housing.
5–Supply tube from camshaft oil manifold to rocker arm shaft.
6–Camshaft oil manifold.
7–Oil filter assemblies.
8–Oil cooler.
9–Turbocharger oil drain tube.
10–Turbocharger oil supply tube.
11–Oil manifold.
12–Oil pump outlet line.
13–Unfiltered oil line to turbocharger lubrication valve.
14–Turbocharger lubrication valve.
15–Scavenge oil line.
16–Piston cooling spray line.
17–Filtered oil line to turbocharger lubrication valve.
18–Oil pump.
19–Suction bell.
20–Oil sump.

Oil Pan
(Deep)

A deep oil pan is used on marine engines and certain other applications where a large capacity oil pan is desired. The oil pan group consists of three major parts; an adapter, the main oil pan and a small rear pan. The adapter is bolted to the base of the engine block. The main and rear oil pans attach to the adapter.

The engine oil pump attaches to the base of the engine block and extends into the main oil pan. Return oil flows through a rear suction line from the small rear pan to the oil pump. The side covers of the main oil pan are too small to remove the oil pump through the side of the pan; therefore, it is necessary to remove the oil pan to remove the pump. It is not necessary to remove the pan adapter when removing the oil pump.

REMOVAL AND INSTALLATION

1. Drain the lubricant from the oil pan.
2. Remove the oil filler and plunger assembly **(1)** and the sump pump **(2)**.
3. Attach a suitable hoist as illustrated and remove the bolts which hold the main oil pan **(3)** to the oil pan adapter **(4)**, and remove the main oil pan.
4. Exercise care when separating the oil pans from the adapter and the adapter from the block to avoid damage to the gaskets.
5. Remove the bolts which hold the rear oil pan **(5)** to the adapter **(4)** and remove the rear oil pan.
6. With the main oil pan and the rear pan removed, the adapter **(4)** can be removed by attaching a suitable hoist in the same manner as it was attached to the main oil pan. Remove the bolts that hold the adapter to the engine block and remove the adapter.

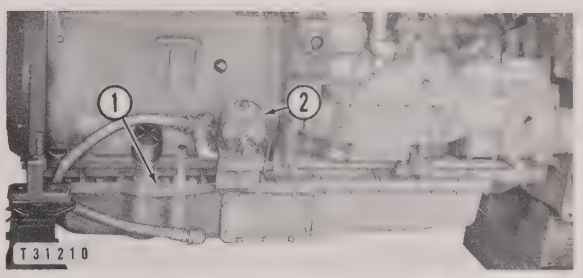

PREPARING TO REMOVE OIL PAN
1–Oil filler and plunger assembly. 2–Sump pump.

7. Replace all damaged gaskets, and with the use of guide pins in the block, install in the reverse order of removal.

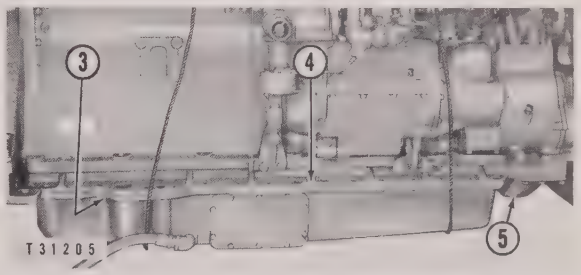

REMOVING THE OIL PAN
3–Oil pan. 4–Adapter. 5–Rear oil pan.

8. Fill the engine with lubricant in accordance with the Operation and Maintenance Instructions.

Oil Pump

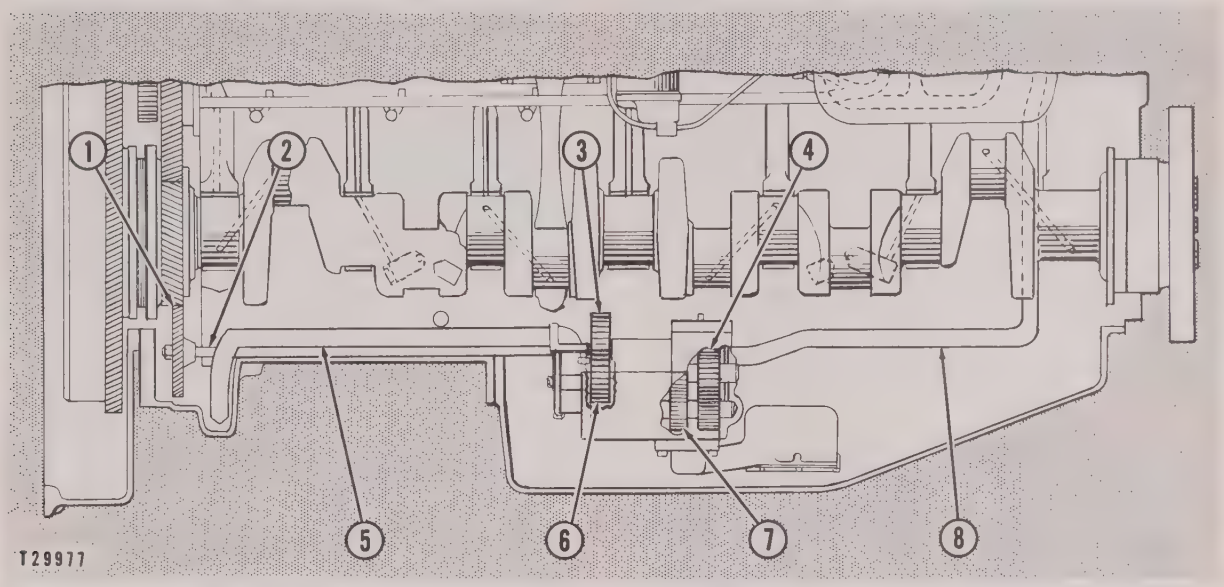

LOCATION OF OIL PUMP
1–Gear. 2–Shaft. 3–Gear. 4–Main oil pump. 5–Tube. 6–Oil pump drive gear. 7–Scavenger pump. 8–Tube.

The oil pump is mounted on the bottom of the cylinder block at the center of the engine. The pump is driven from the rear of the engine by the gear **(1)**, which meshes with the crankshaft gear. The gear **(3)** at the front of the shaft **(2)** meshes with the oil pump drive gear **(6)**. The pump assembly consists of two separate pumps. The main pump **(4)** pumps oil through the tube **(8)** to lubricate the engine. The scavenger pump **(7)** returns oil to the main sump from the rear of the oil pan through the tube **(5)**. An outlet pressure-control-type valve maintains a pressure of 40 PSI at the main bearings.

REMOVAL AND INSTALLATION — OIL PAN IN PLACE

1. Drain the oil pan.
2. Remove the inspection covers from the sides of the pan.
3. Remove the suction bell **(1)**. See the covering topic.
4. Remove the bolts **(3)** which secure the tube **(2)** to the oil pump.
5. Remove the bolts **(6)** which secure the tube **(4)** to the oil pump and remove the bolt which secures the tube **(4)** to the engine block.
6. Remove the bolts **(5)** which secure the oil pump to the engine block and pry the pump loose until the dowels are free from the engine block.

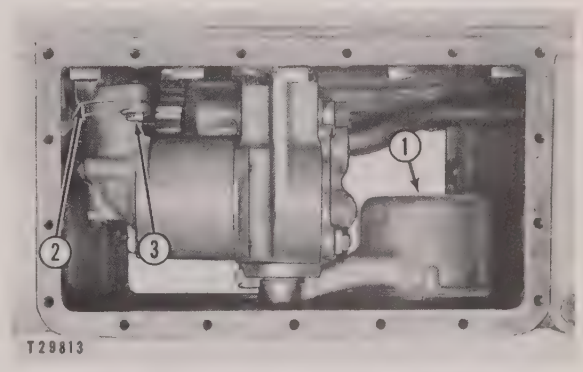

PREPARING TO REMOVE OIL PUMP
1–Suction bell. 2–Tube. 3–Bolt.

7. Lower the pump to the oil pan.

NOTE

The tube extension **(7)** extends into the oil pump as shown by the dotted line. It will be necessary to move the end of the tube downward slightly to free the pump from the tube extension.

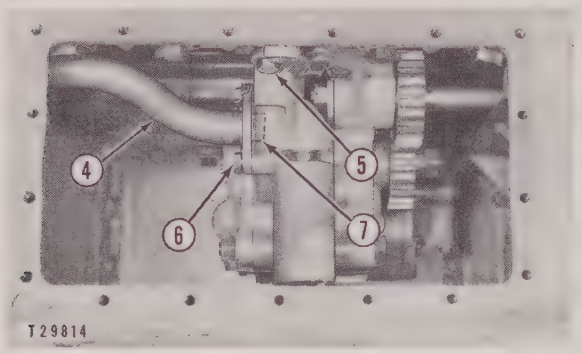

PREPARING TO LOWER OIL PUMP
4–Tube. 5–Bolt. 6–Bolt. 7–Tube extension.

8. Move the oil pump toward the opening at the right of the oil pan and remove the oil pump.

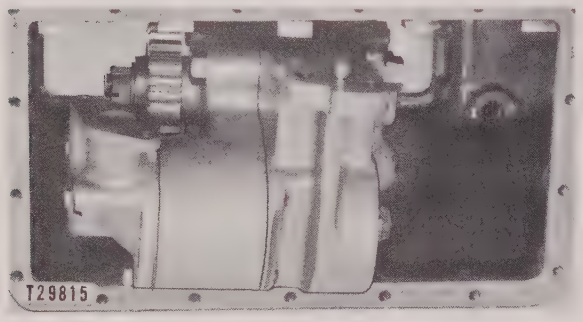

REMOVING OIL PUMP

9. Inspect all parts for wear or damage and replace all gaskets.
10. Install in the reverse order of removal, making certain the dowels and dowel holes are not damaged.

REMOVAL AND INSTALLATION — OIL PAN REMOVED

1. Drain the oil pan and remove the front section. See the covering topic.
2. Remove the bolts which secure the tubes **(2)** and **(4)** to the oil pump.
3. Remove the bolts **(1)** which secure the tube **(2)** to the engine block and remove the tube.
4. Remove the bolts **(3)** which secure the oil pump to the engine block.

CAUTION

To prevent damage to the oil pump and dowels, a sling should be used when raising or lowering the pump assembly.

5. Remove the oil pump.
6. Inspect all the parts for wear or damage and replace all gaskets.
7. Install in the reverse order of removal.

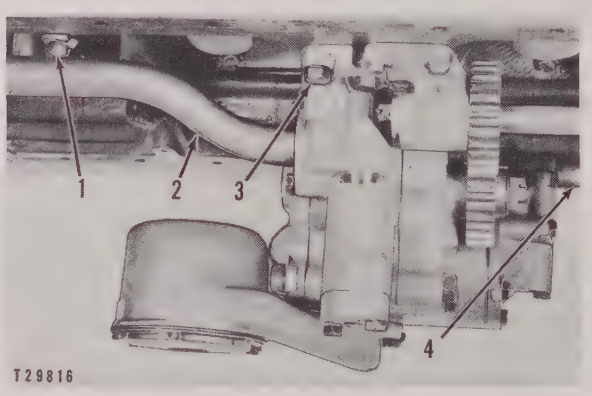

PREPARING TO REMOVE OIL PUMP
1–Bolt. 2–Tube. 3–Bolt. 4–Tube.

OIL PUMP DISASSEMBLY AND ASSEMBLY

1. Remove the suction bell and scavenger pump screen. See the covering topics.
2. Remove the cotter pin **(1)** and loosen the nut **(2)**.

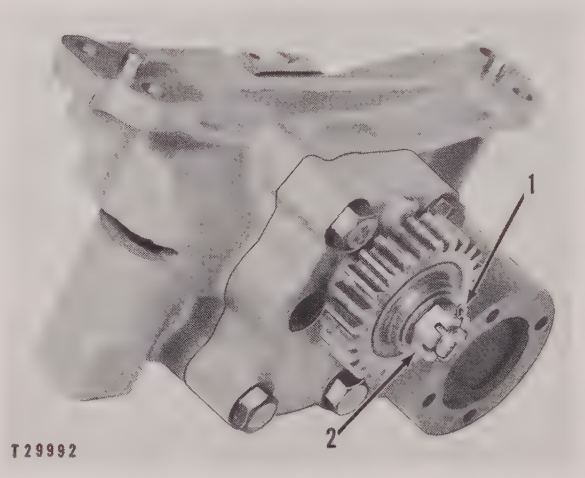

PREPARING TO REMOVE GEAR
1–Cotter pin. 2–Nut.

3. Loosen the gear **(3)** using an 8B7546 Puller **(5)** as shown.
4. Remove the nut, washer **(4)**, and gear from the shaft.

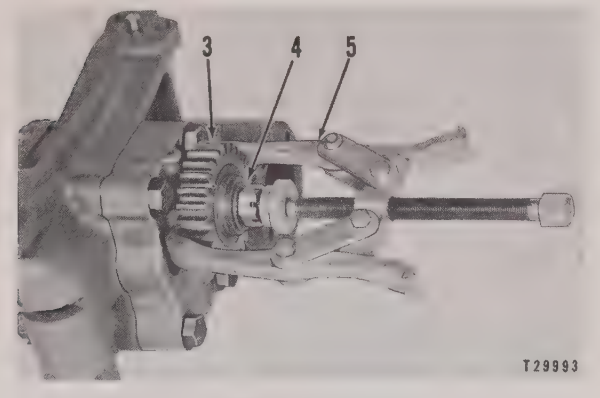

REMOVING GEAR
3–Gear. 4–Washer. 5–Puller.

5. Bend the locks **(8)** and remove the nuts **(6)**.

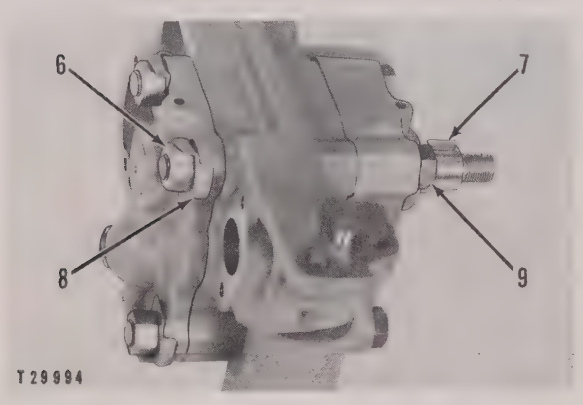

PREPARING TO DISASSEMBLE OIL PUMP BODY
6–Nut. 7–Key. 8–Lock. 9–Bolt.

6. Remove the key **(7)** from the shaft and remove the bolts **(9)**.
7. Move the body assembly **(14)** and gears **(12)** and **(13)** from the shafts.

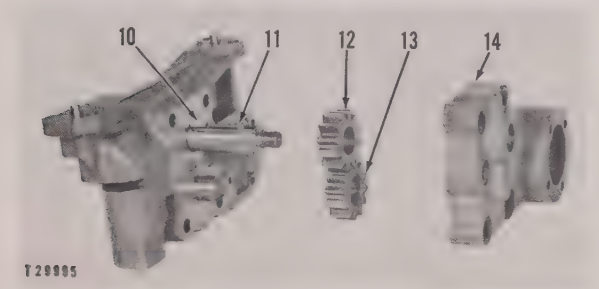

REMOVING GEARS
10–Key. 11–Shaft. 12–Gear. 13–Gear. 14–Body assembly.

8. Remove the key **(10)** from the shaft **(11)**.
9. Move the cover assembly **(15)** from the body assembly **(17)**.
10. Move the shaft assembly **(11)** and gear **(16)** from the body assembly **(17)**.

NOTE

The shaft assembly **(11)** must be serviced as a unit, since the gear cannot be removed from the shaft.

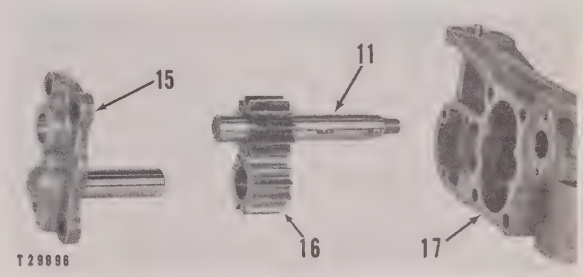

REMOVING SHAFT ASSEMBLY
11–Shaft assembly. 15–Cover assembly. 16–Gear. 17–Body assembly.

11. Inspect the parts for wear or damage. If the bearings have more than .005″ wear, they can be pressed out and replaced.
12. Assemble in the reverse order of disassembly.

NOTE

The bolts **(18)**, which have ground bodies, must be installed in the proper holes as shown.

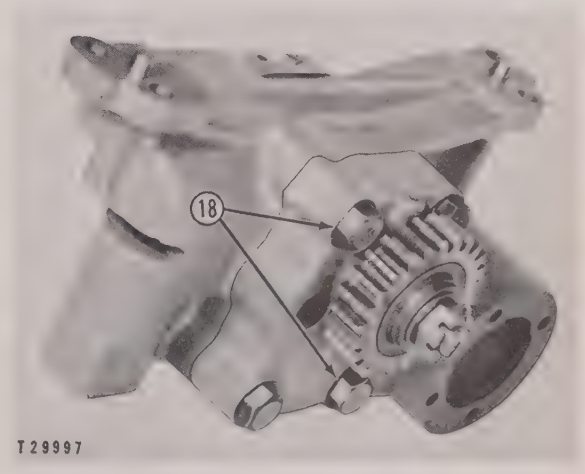

GROUND BOLT LOCATIONS
18–Bolts.

OIL PUMP DRIVE REMOVAL AND INSTALLATION

Bend the locks and remove the bolts securing the brackets **(1)** and **(2)** to the cylinder block and lift out the drive assembly.

Install in the reverse order of removal.

OIL PUMP DRIVE REMOVAL
1–Bracket. 2–Bracket.

OIL PUMP DRIVE DISASSEMBLY AND ASSEMBLY

1. Remove the cotter pin and nut which secures the collar **(4)** and the bracket assembly **(2)** on the shaft **(1)**.

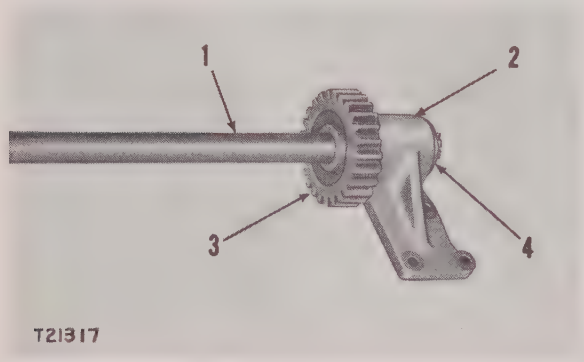

REMOVING THE COLLAR AND BRACKET
1–Shaft. 2–Bracket assembly. 3–Drive gear. 4–Collar.

NOTE

A dowel in the end of the oil pump drive gear **(3)** locates the collar **(4)**.

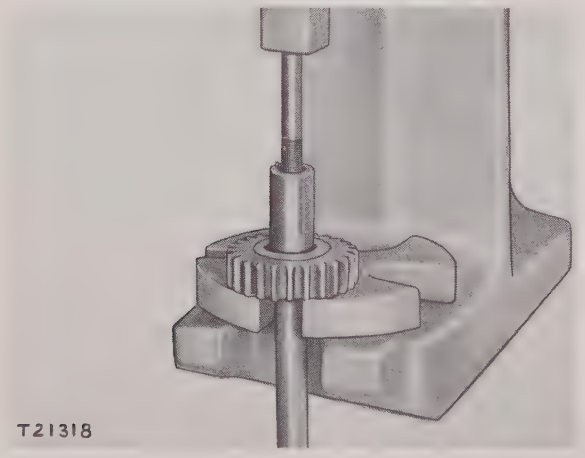

REMOVING THE DRIVE GEAR

2. Press the drive gear from the shaft using a suitable spacer and remove the key.
3. Remove the cotter pin, nut and the washer securing the gear **(5)** to the shaft **(1)**.

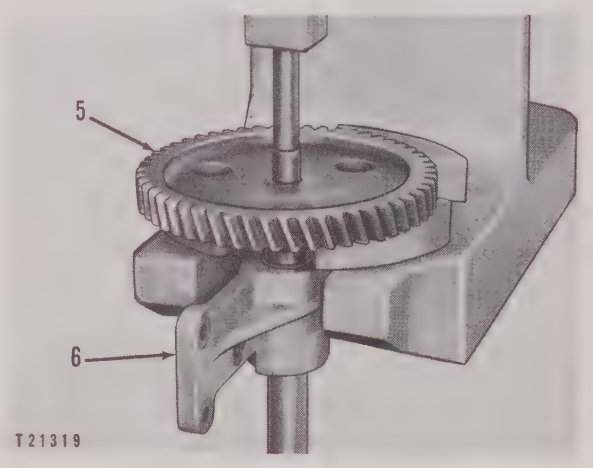

REMOVING THE GEAR
5–Gear. 6–Bracket assembly.

4. Press the gear **(5)** from the shaft and remove the key.
5. Remove the bracket assembly **(6)**.
6. Inspect the bearings **(7)** in the bracket assemblies **(2)** and **(6)** and replace if worn or damaged.

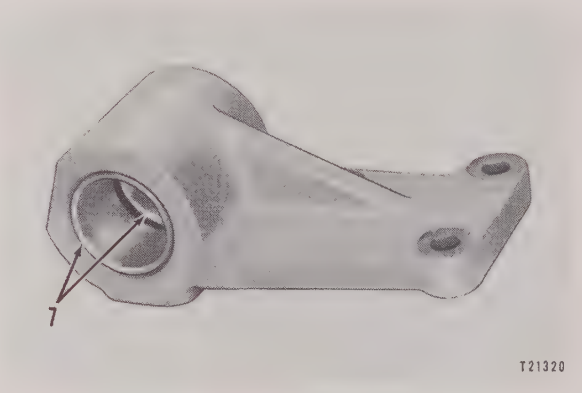

BRACKET ASSEMBLY
7–Bearing.

NOTE

The bearings are pressed 1/64″ below the face of the brackets.

7. Assemble in reverse order of disassembly, using a press to replace the gears on the shaft.

SUCTION BELL

Removal and Installation

1. Drain the oil pan.
2. Remove the bolts which secure the inspection covers to the oil pan and remove the covers.
3. Remove the bolts **(2)** which secure the suction bell **(1)** to the oil pump and remove the bell through the opening at the right of the oil pan.

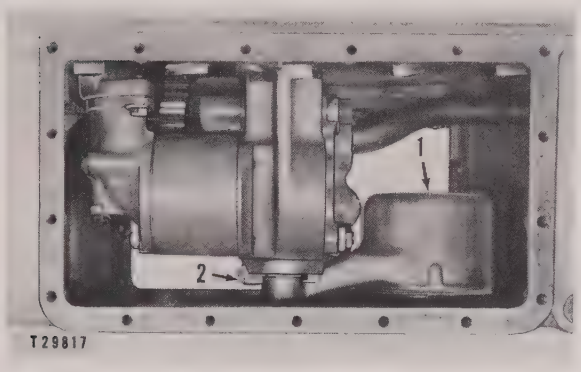

REMOVING SUCTION BELL
1–Bell. 2–Bolt.

4. Replace the gasket and install in the reverse order of removal.

Disassembly and Assembly

Remove the bolts securing the cover **(1)** to the bell **(3)** and remove the cover.

Remove the screen assembly **(2)** from the bell.

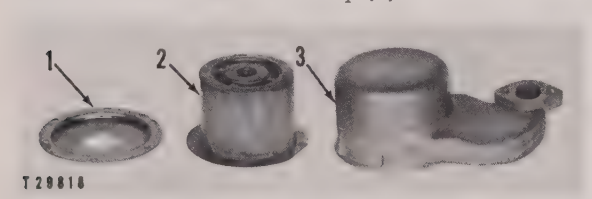

SUCTION BELL DISASSEMBLED
1–Cover. 2–Screen assembly. 3–Bell.

Clean the screen assembly **(2)** in noninflammable cleaning fluid. Replace the gaskets and assemble in the reverse order of disassembly.

SCAVENGER PUMP SCREEN

A screen is provided in the oil pump to prevent damage to the scavenger pump. The screen cannot be removed from the pump with the oil pan in place.

Removal and Installation

1. Remove the front section of the oil pan. See the covering topic.
2. Remove the bolts which secure the cover **(2)** to the pump body **(1)** and remove the cover.

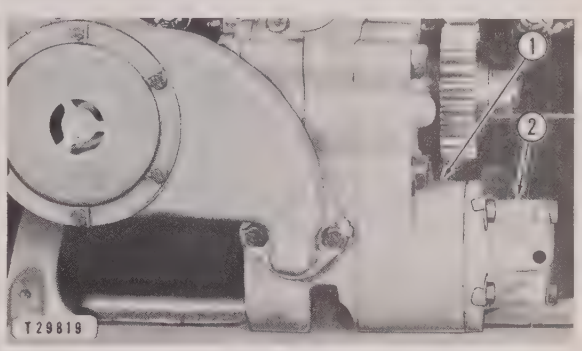

PREPARING TO REMOVE COVER
1–Pump body. 2–Cover.

3. Remove the screen **(3)** as shown and clean in noninflammable cleaning fluid.

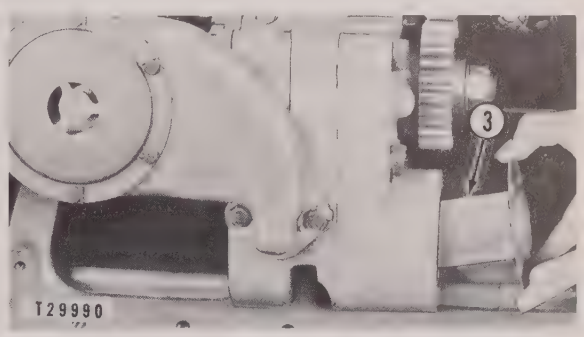

REMOVING SCREEN
3–Screen.

4. Inspect all parts for damage and replace all gaskets.
5. Install in the reverse order of removal.

PRESSURE REGULATING VALVE

The oil pump contains a pressure regulating valve which is not adjustable. Its function is to limit the maximum oil pressure to the engine.

Disassembly and Assembly

Remove the bolts which secure the retainer **(1)** to the pump body.

Remove the retainer, spring **(2)**, and valve **(3)** from the pump body as shown.

Inspect the parts for damage or wear. Check the valve seat and contact surfaces, making certain they are clean and smooth. Assemble in the reverse order of disassembly.

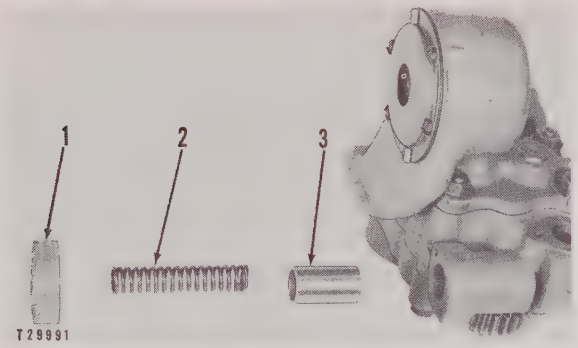

REMOVING VALVE
1–Retainer. 2–Spring. 3–Valve.

Oil Cooler

The oil cooler is located directly above the oil filter base on the right front portion of the cylinder block.

The cooler receives its supply of coolant from the diesel engine cooling system, the coolant being divided between the oil cooler and the tube mounted just above the oil cooler.

The oil is transmitted from the filter base to the cooler and returned to the filter base for passage through the full flow filters prior to entering the oil manifold.

REMOVAL AND INSTALLATION

1. Drain the cooling system and drain the oil from the filter.

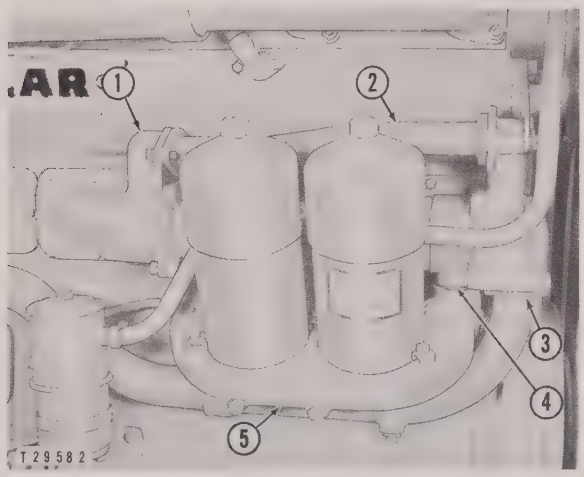

PREPARING TO REMOVE OIL COOLER
1–Elbow. 2–Tube. 3–Elbow. 4–Oil cooler. 5–Filter base.

2. Remove the elbow **(1)** and the tube **(2)**.

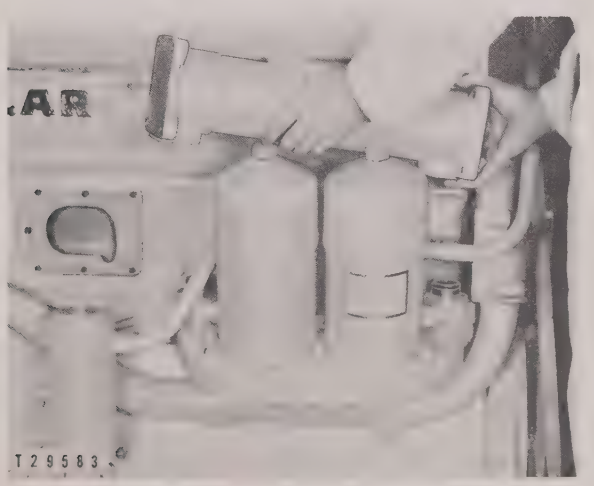

REMOVING THE OIL COOLER

3. Separate the oil cooler **(4)** from the elbow **(3)**.
4. Lift the oil cooler until it is clear of the tubes which project upward from the oil filter base **(5)** and remove the cooler.
5. Install in the reverse order of removal, replacing any damaged gaskets or O-ring seals. Coat the O-ring seals with liquid soap to ease installation. See the topic, OIL FILTERS, for details of the tubes and O-ring seals between the oil filter base and the oil cooler. Carefully lower the oil cooler over the tubes to avoid damaging the O-ring seals.

REMOVAL AND INSTALLATION (AS A UNIT)

1. Drain the cooling system and drain the oil from the filter.
2. Remove the bracket **(3)** and the bolts that secure the tube **(7)** to the elbow **(4)**.
3. Remove the bolts that secure the elbow **(1)** to the cylinder block.
4. Remove the tube **(2)**, the oil cooler **(5)**, and the elbows **(1)** and **(4)** as a unit by lifting until the unit is clear of the tubes that project from the filter base **(6)** and the tube **(7)**.

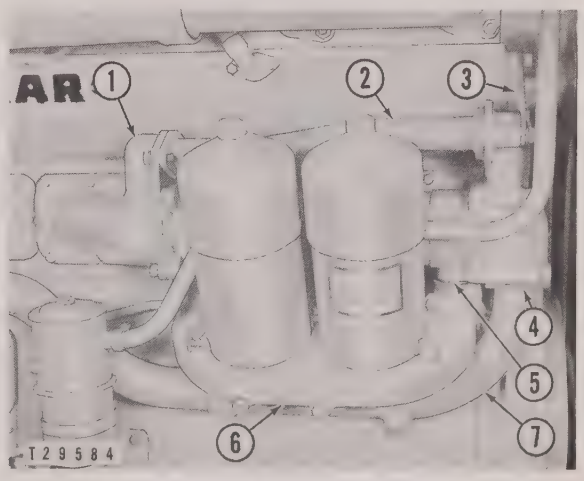

PREPARING TO REMOVE OIL COOLER
1–Elbow. 2–Tube. 3–Bracket. 4–Elbow. 5–Oil cooler. 6–Filter base. 7–Tube.

5. Install in reverse order of removal, replacing any damaged gaskets or O-ring seals. Coat the O-ring seals with liquid soap to ease installation. See the topic, OIL FILTERS, for details of the tubes and O-ring seals between the oil filter base and the oil cooler. Carefully lower the oil cooler over the tubes to avoid damaging the O-ring seals.

Oil Cooler

(With Torque Converter)

The oil cooler is located directly behind the oil filter cases and above the filter base.

The cooler receives its supply of coolant from the diesel engine cooling system, the coolant being divided between the torque converter fluid cooler and the diesel engine cooler.

The oil is transmitted from the filter base to the cooler and returned to the filter base for passage through the full-flow filters prior to entering the oil manifold.

REMOVAL AND INSTALLATION

1. Drain the coolant, the oil from the filters and the fluid from the torque converter.
2. Remove the tubes **(6)** and **(8)** from the torque converter fluid cooler **(3)**, and cover the ends of the tubes to prevent the entry of dirt.
3. Remove the covers **(7)** from the oil filter cases, then remove the filter cases.
4. Remove the bolts that secure the bonnet **(4)** to the torque converter fluid cooler.
5. Disconnect the line **(2)** which leads to the fuel charging valve and remove the bracket **(1)**.

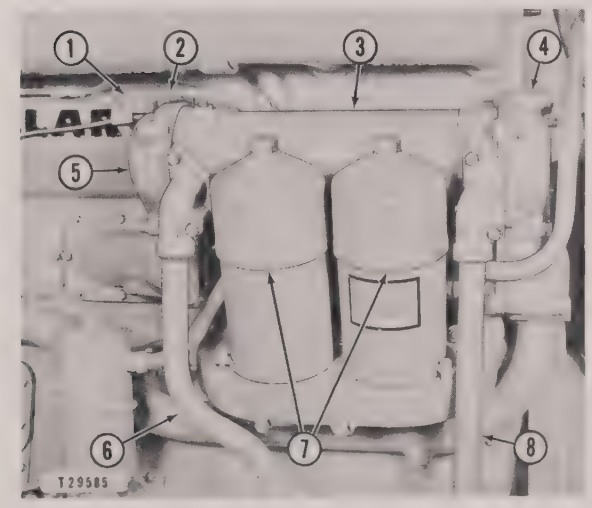

PREPARING TO REMOVE OIL COOLER
1–Bracket. 2–Line to fuel charging valve. 3–Torque converter fluid cooler. 4–Bonnet. 5–Bonnet. 6–Tube. 7–Covers. 8–Tube.

6. Remove the bolts that secure the bonnet **(5)** to the diesel engine cylinder block and to the oil cooler **(9)**.
7. Separate the torque converter fluid cooler from the bonnet **(4)**, being careful not to damage the O-ring seal.
8. Remove the torque converter fluid cooler and the bonnet **(5)** as a unit.
9. Remove the bolts that secure the oil cooler **(9)** to the bonnet **(4)**.

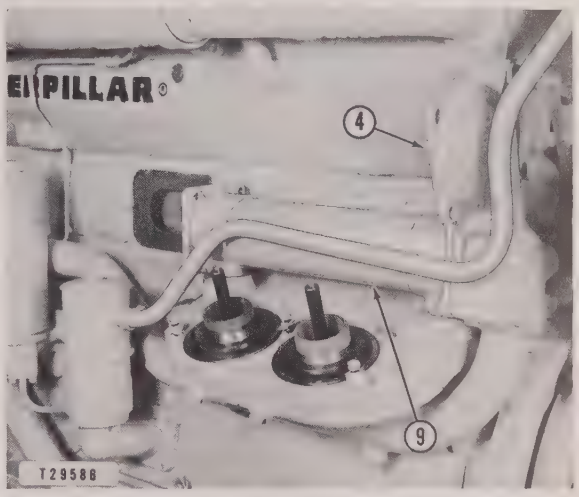

PREPARING TO REMOVE OIL COOLER
4–Bonnet. 9–Oil cooler.

10. Lift the oil cooler off the tubes **(10)** which project upward from the oil filter base.

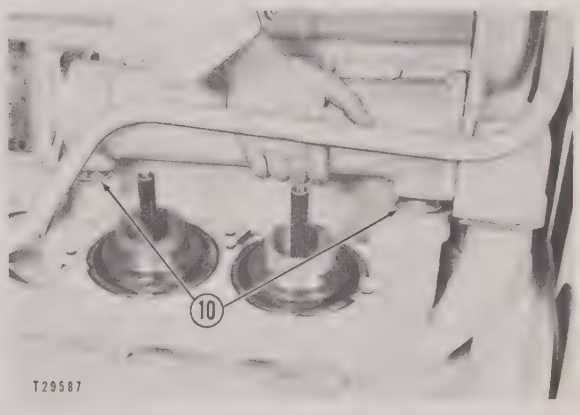

REMOVING OIL COOLER
10–Tubes.

11. Install in reverse order of removal, replacing any damaged gaskets or O-ring seals. Coat the O-ring seals with liquid soap to ease installation. Carefully lower the oil cooler **(9)** over the tubes **(10)** to avoid damaging the O-ring seals. See the topic, OIL FILTERS, for details of the tubes **(10)** and O-ring seals between the oil filter base and the oil cooler.

Oil Coolers

(With Marine Gear, Keel Cooling Arrangement)

INTRODUCTION

The oil coolers are located directly behind the oil filter cases and above the filter base.

The coolers receive their supply of coolant from the diesel engine cooling system, the coolant being divided between the marine gear oil cooler and the engine cooler.

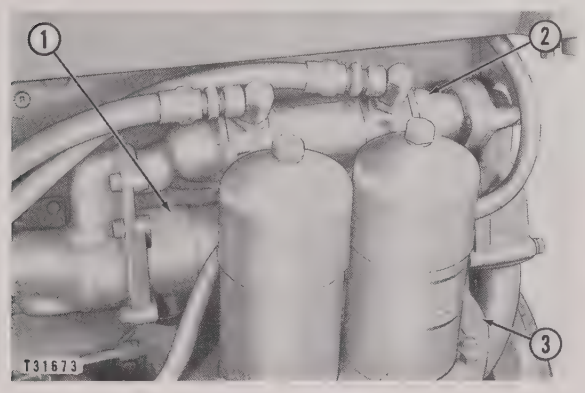

OIL COOLERS
1–Engine oil cooler. 2–Marine gear oil cooler. 3–Filter base.

Engine oil is transmitted from the filter base **(3)** to the cooler **(1)** and returned to the filter base for passage through the full-flow filters prior to entering the engine oil manifold.

Marine gear oil is transmitted from the oil pump located on the marine gear to the oil cooler **(2)** and returned to the oil filter on the marine gear.

MARINE GEAR OIL COOLER

Removal and Installation

1. Drain the coolant from the engine.
2. Disconnect the oil lines **(1)** and **(2)**.
3. Remove the bolts **(3)** and bolts **(4)**, and slide the flange **(6)** to the rear of the engine. Remove the oil cooler **(5)**.
4. At the time of installation, inspect the O-ring seal at the flange **(6)** end of the cooler and replace if necessary.
5. Install in reverse order of removal.

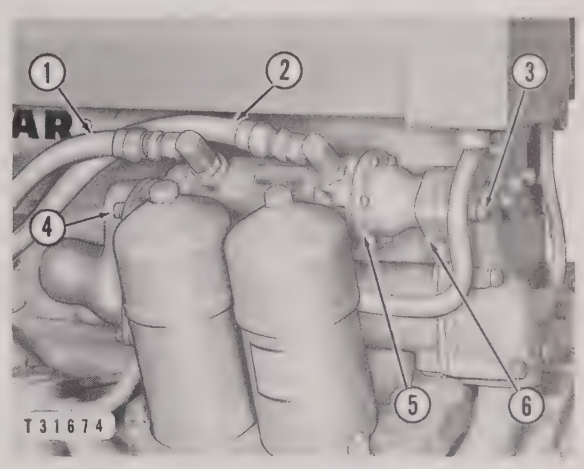

MARINE GEAR OIL COOLER REMOVAL
1–Oil line. 2–Oil line. 3–Bolt. 4–Bolt. 5–Oil cooler. 6–Flange.

Disassembly and Assembly

1. Remove the O-ring seal **(1)** and flange **(4)**.

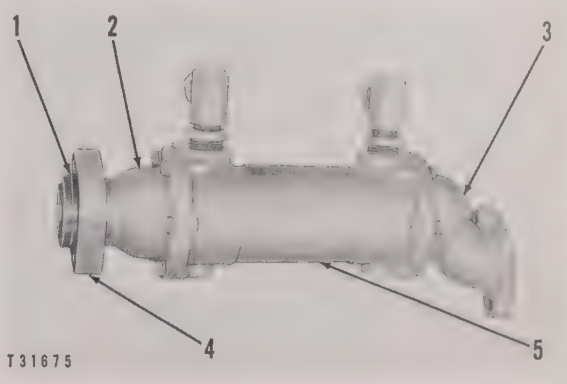

MARINE GEAR OIL COOLER DISASSEMBLY
1–O-ring seal. 2–Bonnet. 3–Bonnet. 4–Flange. 5–Core assembly.

2. Remove the bolts which hold the bonnets **(2)** and **(3)** to the core assembly **(5)** and remove the bonnets.

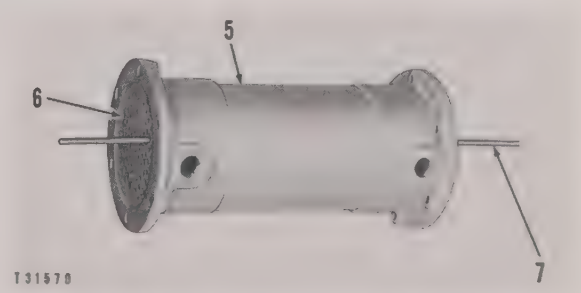

CLEANING OIL COOLER TUBES
5–Core assembly. 6–Tubes. 7–Drill rod.

3. Using a piece of 3/16″ drill rod **(7)**, clean out the tubes **(6)** as illustrated.
4. Assemble in reverse order of disassembly using a new seal and gaskets as needed.

ENGINE OIL COOLER

Removal and Installation

1. Remove the marine gear oil cooler **(2)**. See the covering topic.
2. Drain the oil from the filter base **(5)**.

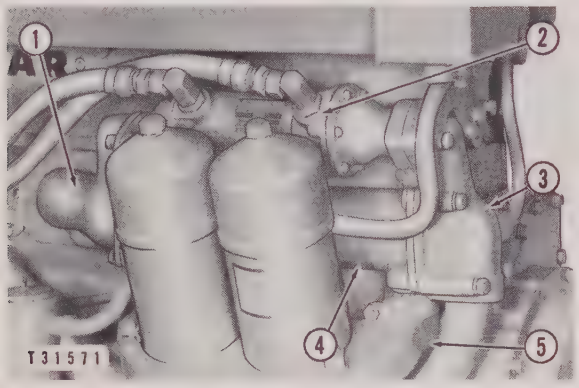

PREPARING TO REMOVE ENGINE OIL COOLER
1–Elbow. 2–Marine gear oil cooler. 3–Elbow. 4–Engine oil cooler. 5–Filter base.

3. Remove the elbow **(1)**.

REMOVING ENGINE OIL COOLER

4. Separate the oil cooler **(4)** from the elbow **(3)**.
5. Lift the oil cooler until it is clear of the tubes which project upward from the oil filter base **(5)** and remove the cooler.
6. Clean the cooler core, if necessary, in the same manner as previously shown for cleaning the marine gear oil cooler.
7. Install in the reverse order of removal, replacing any damaged gaskets or O-ring seals. Coat the O-ring seals with liquid soap to ease installation. See the topic, OIL FILTERS, for details of the tubes and O-ring seals between the oil filter base and the oil cooler. Carefully lower the oil cooler over the tubes to avoid damaging the O-ring seals.

Oil Coolers

ENGINE OIL COOLER

The engine oil cooler is located directly above the oil filter base on the right front portion of the engine. According to the application, the oil cooler can be mounted by itself or in series with a marine gear oil cooler.

Coolant flows from the water pump through the engine oil cooler and back to the block or through the marine gear oil cooler and back to the block.

Oil flows from the oil filter base through the engine oil cooler and back to the oil filter base where the oil is filtered before entering the engine oil manifold.

Removal and Installation

1. Drain the coolant from the engine and the oil cooler.
2. Drain the lubricant from the oil filter base.
3. Remove the marine gear oil cooler if the engine is so equipped. See the covering topic.

NOTE

To remove the engine oil cooler and the marine gear oil cooler as a unit, remove the oil inlet and outlet lines from the marine gear oil cooler and follow the removal steps for the engine oil cooler.

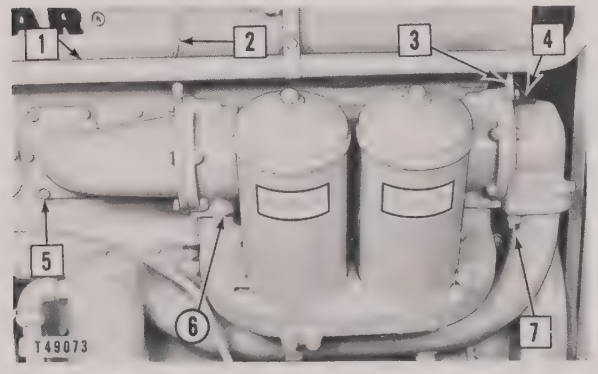

PREPARING TO REMOVE OIL COOLER

☐ Remove

1–Water by-pass line. 2–Vent tube. 3–Bracket. 4–Water line to aftercooler. 5–Bolts (five). 6–Oil cooler. 7–Bolt and lug assembly.

4. Attach a sling and remove the oil cooler **(6)** as illustrated.
5. Inspect all gaskets and seals. Replace if necessary.

OIL COOLER REMOVAL

Disassembly and Assembly

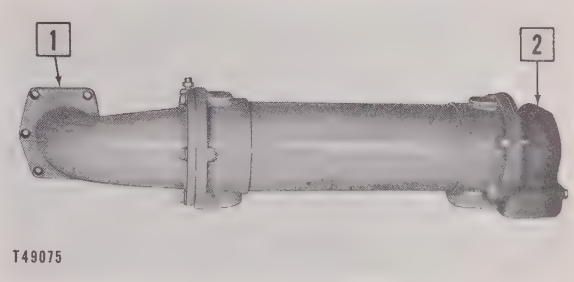

OIL COOLER DISASSEMBLY

☐ Remove

1–Bonnet. 2–Bonnet.

Replace the bonnet gaskets if they are damaged.

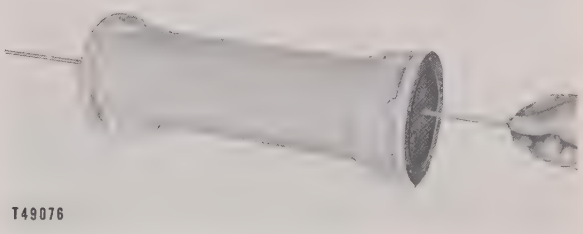

CLEANING THE CORE

Clean the water passages in the core with a rod 3/16″ in diameter as shown.

MARINE GEAR OIL COOLER

The marine gear oil cooler is mounted on the rear of the engine oil cooler and receives its coolant from the engine oil cooler.

Removal and Installation

1. Drain the coolant from the engine, the engine oil cooler and the marine gear oil cooler.

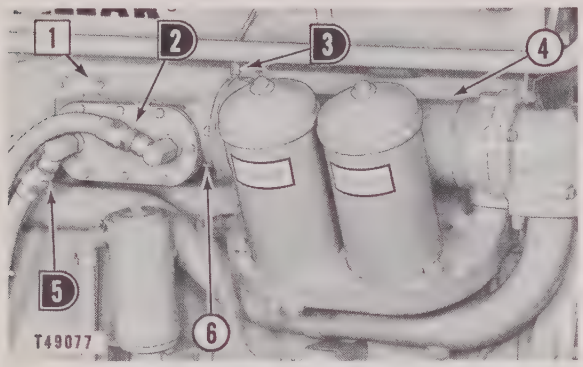

PREPARING TO REMOVE OIL COOLER

Remove Disconnect

1–Bolts (four). 2–Oil line. 3–Vent tube. 4–Engine oil cooler. 5–Oil line. 6–Marine gear oil cooler.

2. Remove the bolts that secure the marine gear oil cooler **(6)** to the engine oil cooler **(4)**.
3. Remove the marine gear oil cooler.

NOTE

Remove the oil cooler before disconnecting the lines **(2)** and **(5)**. Disconnect the lines **(2)** and **(5)** while holding the oil cooler over a container. Tie the lines with the open ends up to prevent oil leakage.

4. Inspect the gaskets and replace if damaged.

Disassembly and Assembly

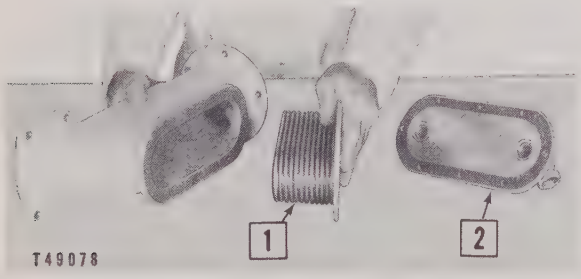

OIL COOLER DISASSEMBLY

Remove

1–Core. 2–Cover.

Inspect the gaskets and replace if damaged.

Oil Filters

FLOW OF OIL THROUGH THE OIL COOLER, BASE AND FILTERS

Unfiltered oil is delivered by the oil pump **(6)** through a passage in the filter base **(5)**, into the oil cooler **(1)**. The unfiltered oil is cooled and then flows through a passage in the filter base into the oil filter **(4)**. The oil is filtered as it passes through

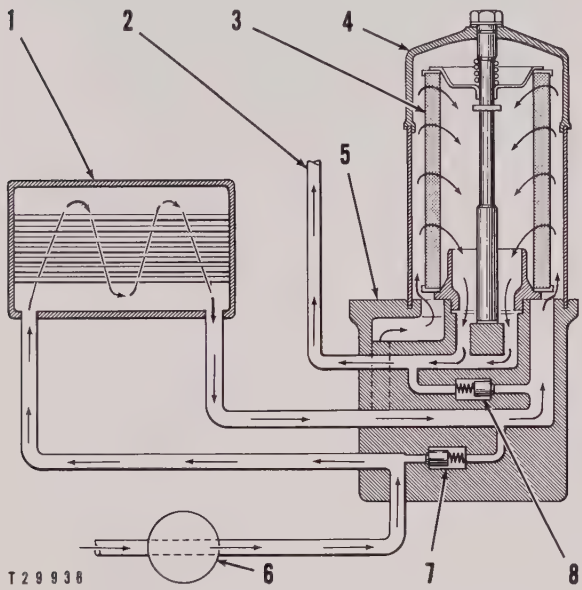

FLOW OF OIL THROUGH OIL COOLER, BASE AND FILTERS (SCHEMATIC)
1–Oil cooler. 2–Passage. 3–Filter element. 4–Oil filter. 5–Filter base. 6–Oil pump. 7–Oil cooler by-pass valve. 8–Oil filter by-pass valve.

the filter element **(3)**. The filtered oil is transmitted through the passage **(2)** to the engine for lubrication.

An outlet pressure control valve system is provided to maintain a uniform supply of oil to the oil manifold and to the turbocharger.

If the oil cooler should become restricted, the pressure will unseat the oil cooler by-pass valve **(7)**, permitting the oil to flow from the pump directly to the oil filter element **(3)**.

If the oil filters should become restricted, excessive pressure will unseat the oil filter by-pass valve **(8)** permitting the oil to by-pass the filters and flow directly to the engine.

REMOVAL AND INSTALLATION

1. Drain the coolant. Drain the oil from the turbocharger oil filter and the diesel engine oil filter.
2. Remove the fumes disposal tube **(5)** and the water tube **(7)**.
3. Remove the oil line **(4)** and the fitting from the oil filter base.
4. Remove the bolts that secure the elbow **(1)** and the bracket **(3)** to the cylinder block.
5. Remove the nuts that secure the oil filter base **(6)** to the cylinder block.

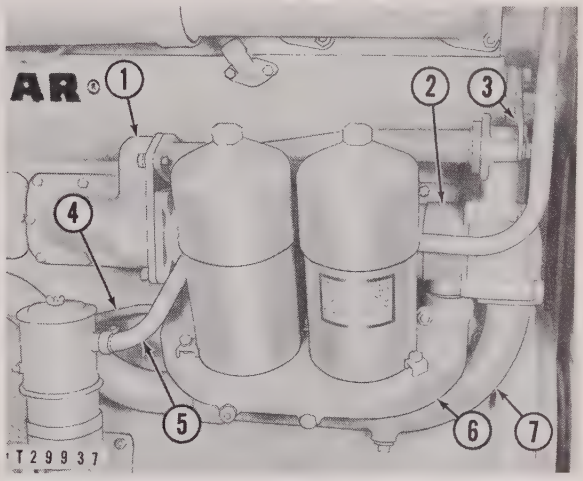

PREPARING TO REMOVE OIL FILTER
1–Elbow. 2–Oil cooler. 3–Bracket. 4–Oil line. 5–Tube. 6–Filter base. 7–Tube.

6. Move the filter base **(6)** off the studs and remove the oil filter and oil cooler **(2)** as a unit.
7. The oil cooler can be lifted off the tubes that connect it to the oil filter.
8. Remove the tubes **(9)** from the oil filter base **(6)**. Inspect the O-ring seals **(8)** for damage.

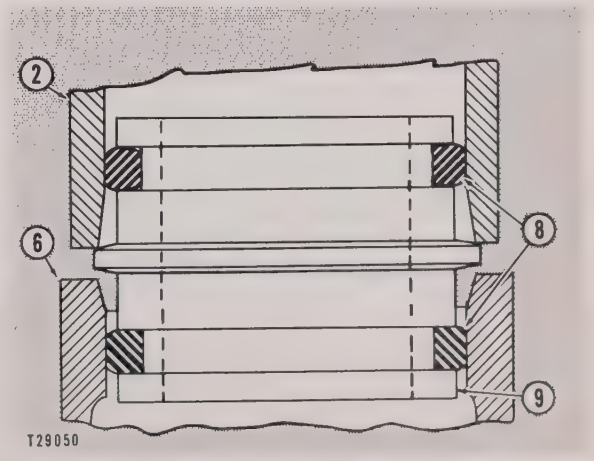

SEALS BETWEEN OIL COOLER AND OIL FILTER BASE
2–Oil cooler. 6–Filter base. 8–O-ring seals. 9–Tube.

9. Install in the reverse order of removal, replacing any damaged gaskets or seals. Coat the O-ring seals **(8)** with liquid soap to ease installation. Carefully install the tubes **(9)** and the oil cooler **(2)** to avoid damaging the O-ring seals.

DISASSEMBLY

1. Remove the covers **(3)** from the oil filter base.
2. Remove the spring **(1)** and the plunger **(2)** which make up the oil cooler by-pass valve.
3. Remove the spring **(4)** and the plunger **(5)** which make up the oil filter by-pass valve.

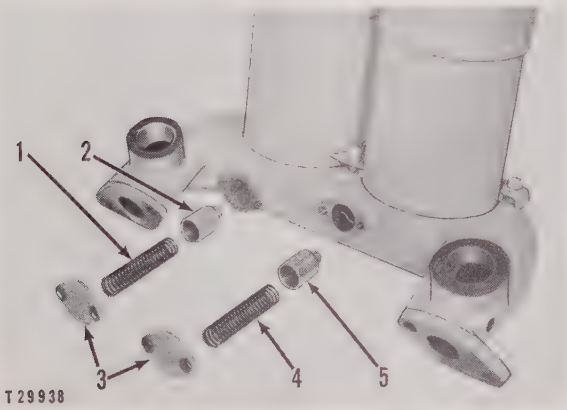

EXPLODED VIEW OF BY-PASS VALVES
1–Spring. 2–Plunger. 3–Covers. 4–Spring. 5–Plunger.

4. Loosen the stud and nut assembly **(7)** by turning the nut counterclockwise until the cover assembly **(6)** can be removed.
5. Remove the element **(8)**.
6. Remove the bolts and clamps **(11)** that secure the case **(10)** to the base **(9)**. Remove the case.

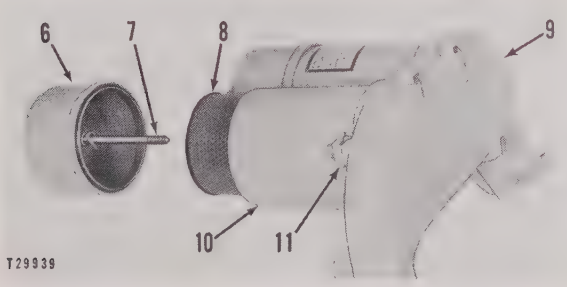

REMOVING COVER ASSEMBLY AND FILTER ELEMENT
6–Cover assembly. 7–Stud and nut assembly. 8–Element. 9–Base. 10–Case. 11–Clamp.

7. Remove the clip **(13)** from the stud and nut assembly **(7)**.
8. Remove the retainer **(14)** and the spring **(15)**.

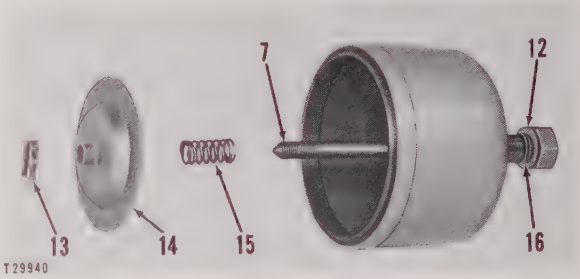

REMOVING PARTS FROM COVER
7–Stud and nut assembly. 12–Gasket. 13–Clip. 14–Retainer. 15–Spring. 16–Seal.

9. Remove the stud and nut assembly from the cover and remove the seal **(16)** and gasket **(12)**.

ASSEMBLY

1. Clean the filter parts thoroughly.
2. Inspect the by-pass valve plungers and the surface against which they seat in the filter base and replace the plungers if worn or damaged.
3. Replace any seals or gaskets which are not in good condition.
4. Assemble the filter assembly in the reverse order of disassembly.

TURBOCHARGER OIL FILTER

The supply of oil to the turbocharger oil filter is received from the base of the engine oil filter and is filtered again by passing through the turbocharger filter element. This filter is of the full-flow type. A retainer within the filter maintains an oil level in the filter at all times to assure that oil will reach the turbocharger bearings as soon as the engine is started.

Removal and Installation

1. Drain the oil from the filter.
2. Disconnect the oil lines **(1)** and **(3)** from the filter base **(2)**. Cover the openings of the oil lines to prevent the entry of dirt.
3. Remove the bolts that secure the oil filter base to the mounting pad and remove the filter.
4. Clean the mating surfaces and install in reverse order of removal using new gaskets.

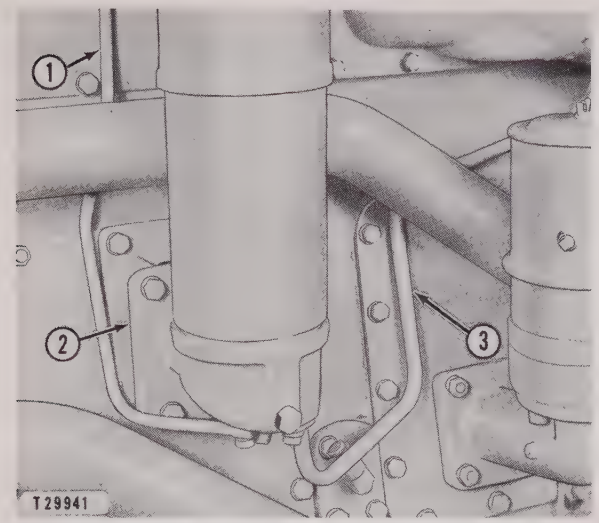

PREPARING TO REMOVE OIL FILTER
1–Oil line. 2–Filter base. 3–Oil line.

Disassembly and Assembly

1. Remove the cover **(9)** by turning the valve **(11)** in a counterclockwise direction and remove the element **(5)**.
2. Turn the retainer **(4)** in a counterclockwise direction until it can be removed.
3. Remove the clamp **(3)** and the case **(2)** from the base **(1)**.

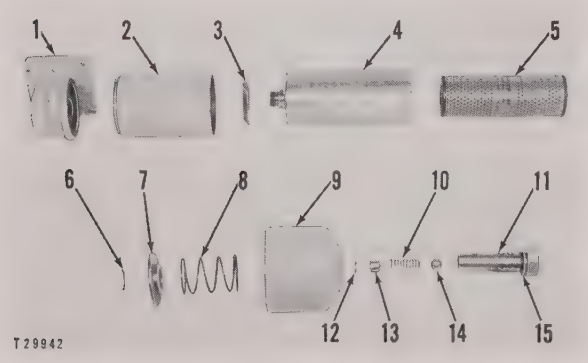

EXPLODED VIEW OF OIL FILTER
1–Base. 2–Case. 3–Clamp. 4–Retainer. 5–Element. 6–Snap ring. 7–Cup. 8–Spring. 9–Cover. 10–Spring. 11–Valve. 12–Snap ring. 13–Retainer. 14–Ball. 15–Ring.

4. Remove the snap ring **(6)**, the cup **(7)** and the spring **(8)**.
5. Lift the valve assembly from the cover **(9)** and remove the snap ring **(12)**, the retainer **(13)**, the spring **(10)** and the ball **(14)** from the valve **(11)**.
6. Remove the ring **(15)** and the gasket above the ring.
7. Clean the parts of the filter and replace seals and gaskets which are not in good condition.
8. Assemble the filter in the reverse order of disassembly.

OIL FILLER

The oil filler is part of the oil pan cover assembly located on the left side of the engine.

To remove the oil filler adapter assembly **(4)**, remove the bolts **(5)**.

Disassembly and Assembly

1. Remove the cover assembly **(1)**.
2. Remove the cotter pin **(2)** that secures the cover assembly to the chain **(3)**, to remove the cover assembly.
3. Remove the gaskets and plate from the inside of the cover assembly and replace if necessary.

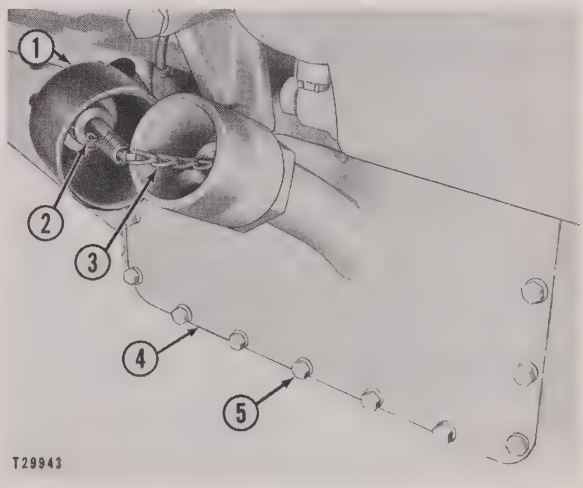

PREPARING TO REMOVE COVER ASSEMBLY
1–Cover assembly. 2–Cotter pin. 3–Chain. 4–Adapter assembly. 5–Bolt.

4. Clean all parts and assemble in reverse order of disassembly.

CRANKCASE BREATHER

To remove the crankcase breather from the engine block, disconnect the fumes disposal tube **(2)** from the breather assembly **(1)** and remove the nuts **(3)**.

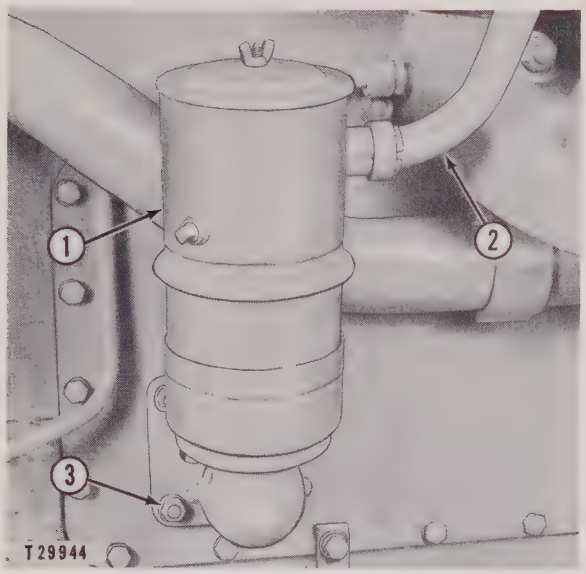

PREPARING TO REMOVE BREATHER
1–Breather assembly. 2–Tube. 3–Nut.

Disassembly and Assembly

1. Remove the nut **(1)**, the cover assembly **(2)** and the element **(3)**.
2. Remove the nuts and separate the elbow assembly **(5)** from the breather assembly **(4)**.

NOTE

The lower element in the breather assembly **(4)** is part of the assembly and cannot be removed.

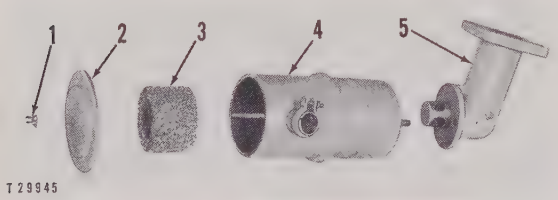

EXPLODED VIEW OF BREATHER
1–Nut. 2–Cover assembly. 3–Element. 4–Breather assembly. 5–Elbow assembly.

3. Clean the elements in the upper and lower portions of the breather assembly **(4)** and remove all traces of the cleaning solution.
4. Assemble in reverse order of disassembly, replacing any damaged gaskets.

Oil Filters

(With Torque Converter)

FLOW OF OIL THROUGH THE OIL COOLER, BASE AND FILTERS

Unfiltered oil is delivered by the oil pump **(6)** through a passage in the filter base **(5)**, into the oil cooler **(1)**. The unfiltered oil is cooled and then flows through a passage in the filter base into the

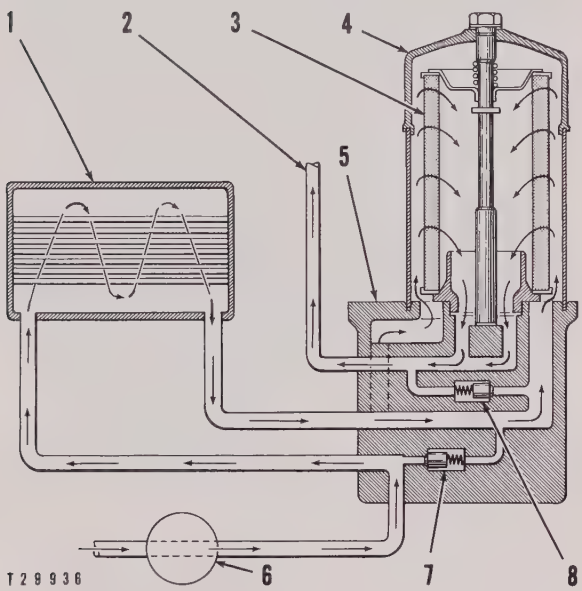

FLOW OF OIL THROUGH OIL COOLER, BASE AND FILTERS (SCHEMATIC)

1–Oil cooler. 2–Passage. 3–Filter element. 4–Oil filter. 5–Filter base. 6–Oil pump. 7–Oil cooler by-pass valve. 8–Oil filter by-pass valve.

oil filters **(4)**. The oil is filtered as it passes through the filter element **(3)**. The filtered oil is transmitted through the passage **(2)** to the engine for lubrication.

An outlet pressure control valve system is provided to maintain uniform supply of oil to the oil manifold and to the turbocharger.

If the oil cooler should become restricted, the pressure will unseat the oil cooler by-pass valve **(7)**, permitting the oil to flow from the pump directly to the oil filter element **(3)**.

If the oil filters should become restricted, excessive pressure will unseat the oil filter by-pass valve **(8)** permitting the oil to by-pass the filters and flow directly to the engine.

REMOVAL AND INSTALLATION

1. Drain the engine coolant. Drain the oil from the engine filter and the turbocharger filter, and the fluid from the torque converter.
2. Remove the tubes **(8)** and **(10)** and cover the ends of the flexible hose connections to prevent the entry of dirt.
3. Remove the fumes disposal tube **(5)** and the water tube **(11)**.
4. Remove the oil line **(6)** and the fitting which connects it to the oil filter base **(9)**.

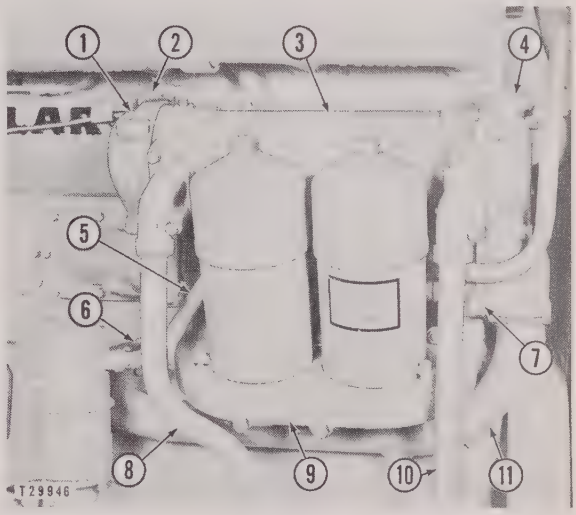

PREPARING TO REMOVE OIL FILTER

1–Bonnet. 2–Tube. 3–Torque converter fluid cooler. 4–Bonnet. 5–Tube. 6–Oil line. 7–Oil cooler. 8–Tube. 9–Filter base. 10–Tube. 11–Tube.

5. Remove the bolts that secure the bonnet **(1)** to the cylinder block.
6. Disconnect the tube **(2)** from the fitting on the torque converter fluid cooler **(3)**.
7. Remove the bolts that secure the bonnet **(4)** and the support bracket to the cylinder block.
8. Remove the nuts that secure the filter base **(9)** to the cylinder block.
9. Move the filter base off the studs and remove the oil filter, torque converter fluid cooler and oil cooler **(7)** as a unit.
10. The torque converter fluid cooler and the oil cooler can be lifted off the tubes that connect the oil cooler to the oil filter base.
11. Remove the tubes **(13)** from the oil filter base **(9)**. Inspect the O-ring seals **(12)** for damage.
12. Install in the reverse order of removal, replacing any damaged gaskets or seals. Coat the O-ring seals **(12)** with liquid soap to ease installation. Carefully install the tubes **(13)** and the oil cooler **(7)** to avoid damaging the O-ring seals.

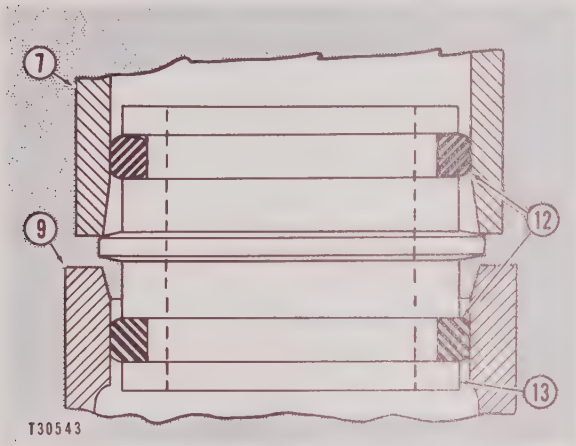

SEALS BETWEEN OIL COOLER AND OIL FILTER BASE
7–Oil cooler. 9–Filter base. 12–O-ring seals. 13–Tube.

DISASSEMBLY

1. Remove the covers **(3)** from the oil filter base.
2. Remove the spring **(1)** and the plunger **(2)** which make up the oil cooler by-pass valve.
3. Remove the spring **(4)** and the plunger **(5)** which make up the oil filter by-pass valve.

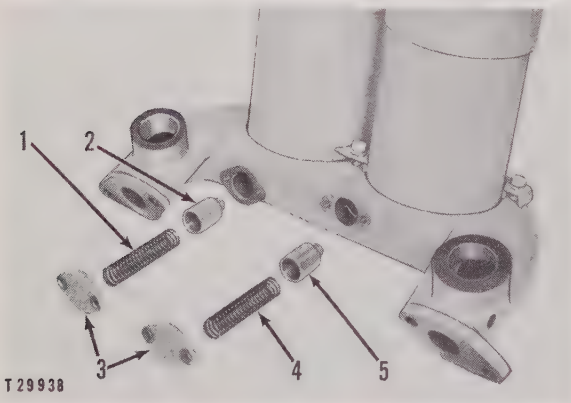

EXPLODED VIEW OF BY-PASS VALVES
1–Spring. 2–Plunger. 3–Covers. 4–Spring. 5–Plunger.

4. Loosen the stud and nut assembly **(7)** by turning the nut counterclockwise until the cover assembly **(6)** can be removed.
5. Remove the elements **(8)**.
6. Remove the bolts and clamps **(11)** that secure the case **(10)** to the base **(9)**. Remove the case.
7. Remove the clip **(13)** from the stud and nut assembly **(7)**.
8. Remove the retainer **(14)** and the spring **(15)**.

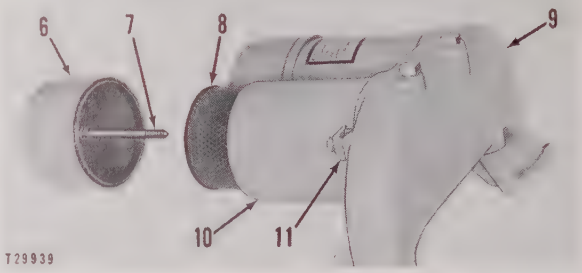

REMOVING COVER ASSEMBLY AND FILTER ELEMENT
6–Cover assembly. 7–Stud and nut assembly. 8–Element. 9–Base. 10–Case. 11–Clamp.

9. Remove the stud and nut assembly from the cover and remove the seal **(16)** and gasket **(12)**.

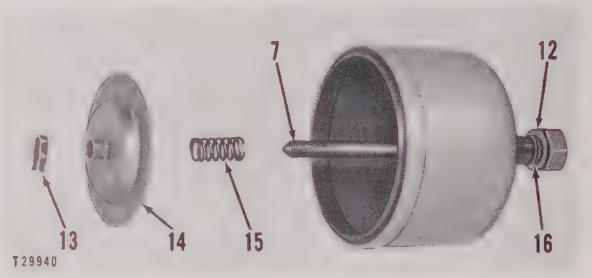

REMOVING PARTS FROM COVER
7–Stud and nut assembly. 12–Gasket. 13–Clip. 14–Retainer. 15–Spring. 16–Seal.

ASSEMBLY

1. Clean the filter parts thoroughly.
2. Inspect the by-pass valve plungers and the surface against which they seat in the filter base and replace the plungers if worn or damaged.
3. Replace any seals or gaskets which are not in good condition.
4. Assemble the filter assembly in the reverse order of disassembly.

TURBOCHARGER OIL FILTER

The supply of oil to the turbocharger oil filter is received from the base of the engine oil filter and is filtered again by passing through the turbocharger filter element. This filter is of the full-flow type. A retainer within the filter maintains an oil level in the filter at all times to assure that oil will reach the turbocharger bearings as soon as the engine is started.

Removal and Installation

1. Drain the oil from the filter.

2. Disconnect the oil lines **(1)** and **(3)** from the filter base **(2)**. Cover the openings of the oil lines to prevent the entry of dirt.

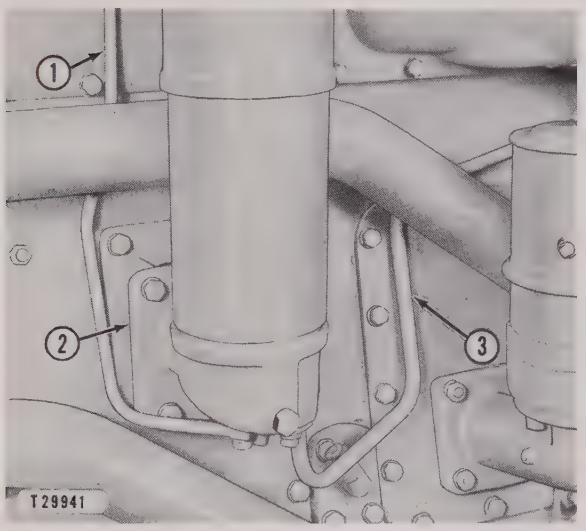

PREPARING TO REMOVE OIL FILTER
1–Oil line. 2–Filter base. 3–Oil line.

3. Remove the bolts that secure the oil filter base to the mounting pad and remove the filter.
4. Clean the mating surfaces and install in reverse order of removal, using new gaskets.

Disassembly and Assembly

1. Remove the cover **(9)** by turning the valve **(11)** in a counterclockwise direction and remove the element **(5)**.
2. Turn the retainer **(4)** in a counterclockwise direction until it can be removed.
3. Remove the clamp **(3)** and the case **(2)** from the base **(1)**.

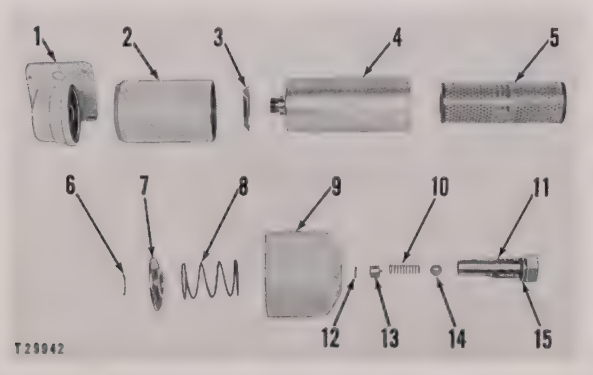

EXPLODED VIEW OF OIL FILTER
1–Base. 2–Case. 3–Clamp. 4–Retainer. 5–Element. 6–Snap ring. 7–Cup. 8–Spring. 9–Cover. 10–Spring. 11–Valve. 12–Snap ring. 13–Retainer. 14–Ball. 15–Ring.

4. Remove the snap ring **(6)**, the cup **(7)** and the spring **(8)**.
5. Lift the valve assembly from the cover **(9)** and remove the snap ring **(12)**, the retainer **(13)**, the spring **(10)** and the ball **(14)** from the valve **(11)**.
6. Remove the ring **(15)** and the gasket above the ring.
7. Clean the parts of the filter and replace seals and gaskets which are not in good condition.
8. Assemble the filter in the reverse order of disassembly.

OIL FILLER

The oil filler is part of the oil pan cover assembly located on the left side of the engine.

To remove the oil filler adapter assembly **(4)**, remove the bolts **(5)**.

Disassembly and Assembly

1. Remove the cover assembly **(1)**.
2. Remove the cotter pin **(2)** that secures the cover assembly to the chain **(3)**, to remove the cover assembly.
3. Remove the gaskets and plate from the inside of the cover assembly and replace if necessary.

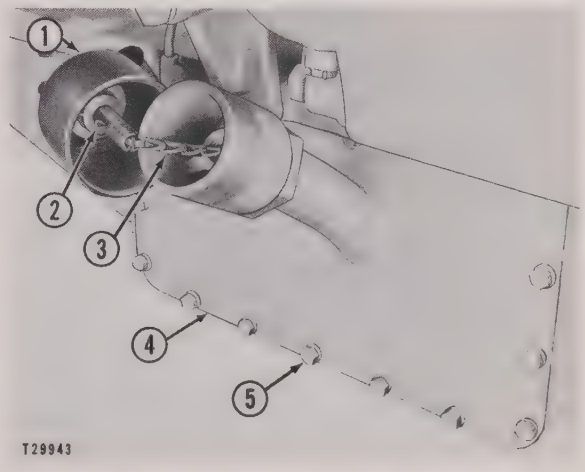

PREPARING TO REMOVE COVER ASSEMBLY
1–Cover assembly. 2–Cotter pin. 3–Chain. 4–Adapter assembly. 5–Bolt.

4. Clean all parts and assemble in reverse order of disassembly.

CRANKCASE BREATHER

To remove the crankcase breather from the engine block, disconnect the fumes disposal tube **(2)**

from the breather assembly **(1)** and remove the nuts **(3)**.

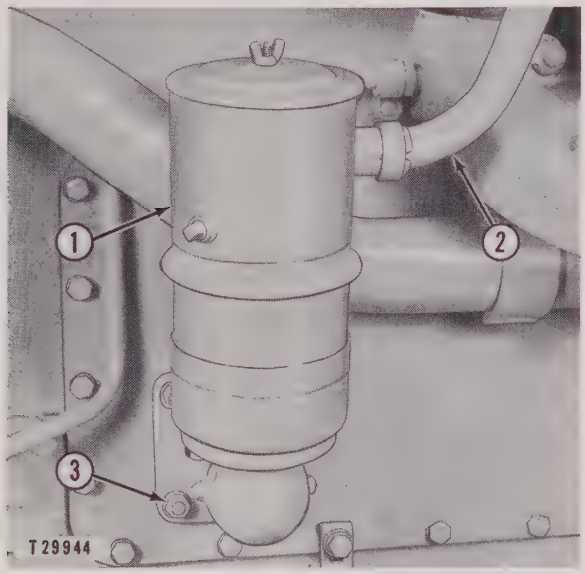

PREPARING TO REMOVE BREATHER
1–Breather assembly. 2–Tube. 3–Nut.

Disassembly and Assembly

1. Remove the nut **(1)**, the cover assembly **(2)** and the element **(3)**.
2. Remove the nuts and separate the elbow assembly **(5)** from the breather assembly **(4)**.

NOTE

The lower element in the breather assembly **(4)** is part of the assembly and cannot be removed.

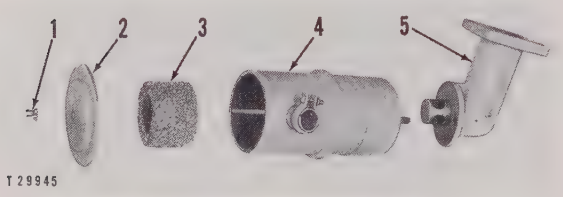

EXPLODED VIEW OF BREATHER
1–Nut. 2–Cover assembly. 3–Element. 4–Breather assembly. 5–Elbow assembly.

3. Clean the elements in the upper and lower portions of the breather assembly **(4)** and remove all traces of the cleaning solution.
4. Assemble in reverse order of disassembly, replacing any damaged gaskets.

Oil Filters

FLOW OF OIL THROUGH THE OIL COOLER, FILTER BASE AND OIL FILTERS

Unfiltered oil is delivered by the oil pump **(6)** through a passage in the filter base **(5)**, into the oil cooler **(1)**. The unfiltered oil is cooled and then flows through a passage in the filter base into the oil filters **(4)**. The oil is filtered as it passes through the filter element **(3)**. The filtered oil goes through the passage **(2)** to the engine for lubrication.

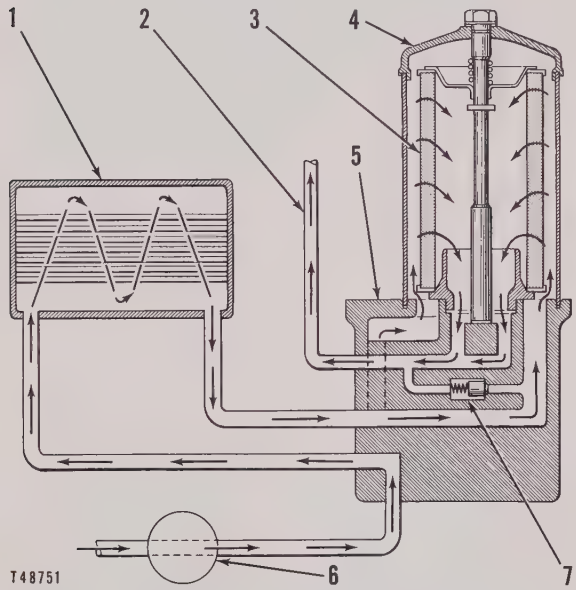

FLOW OF OIL THROUGH OIL COOLER, FILTER BASE AND OIL FILTER (SCHEMATIC)

1–Oil cooler. 2–Passage. 3–Filter element. 4–Oil filter. 5–Filter base. 6–Oil pump. 7–Oil filter by-pass valve.

A control valve system is provided to maintain a uniform supply of oil to the oil manifold and to the turbocharger.

If the oil filters should become restricted, excessive pressure will unseat the oil filter by-pass valve **(7)** permitting the oil to by-pass the filters and flow directly to the engine.

REMOVAL AND INSTALLATION

1. Drain the cooling system.
2. Remove the plugs **(3)** and drain the oil from the filter assembly.
3. Remove the engine oil cooler **(1)**. See the covering topic.
4. Inspect and replace all damaged gaskets or O-ring seals before installation.

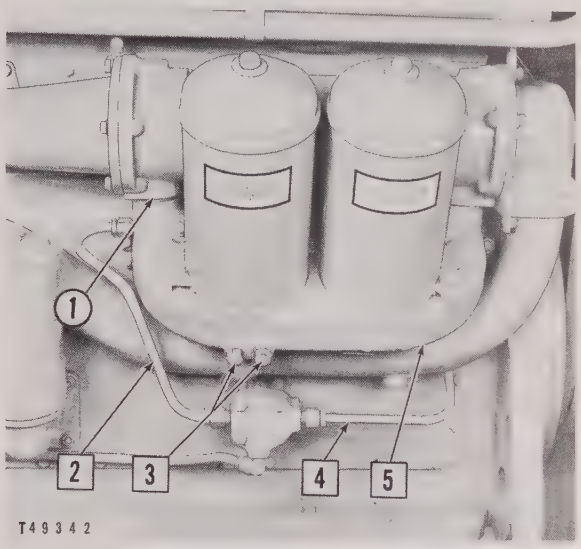

PREPARING TO REMOVE OIL FILTER ASSEMBLY

☐ **Remove**

1–Engine oil cooler. 2–Oil line from filter base to turbocharger lubrication valve. 3–Drain plugs. 4–Line from filter base to turbocharger lubrication valve. 5–Oil filter base.

DISASSEMBLY

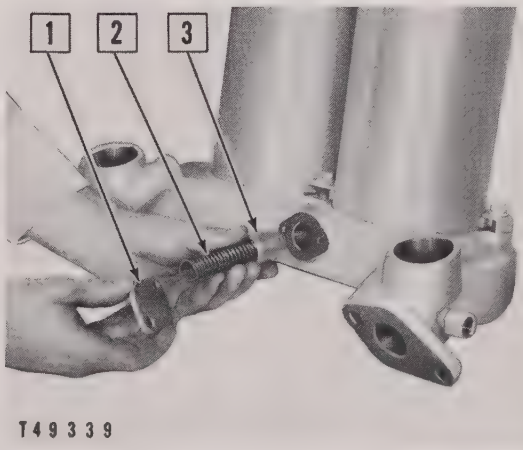

REMOVING BY-PASS VALVE

☐ **Remove**

1–Cover. 2–Spring. 3–Plunger.

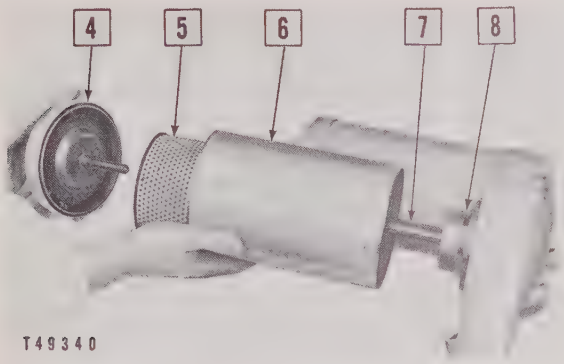

DISASSEMBLING OIL FILTER

☐ Remove

4–Cover assembly. 5–Filter element. 6–Case. 7–Stud. 8–Adapter.

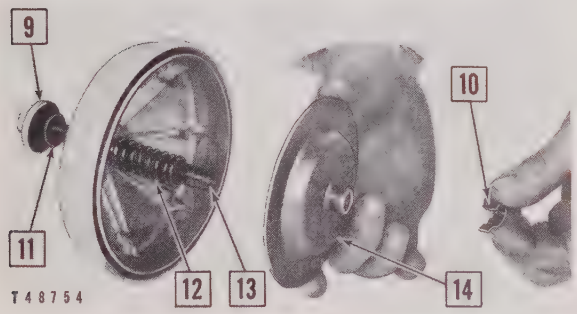

DISASSEMBLING COVER

☐ Remove

9–Washer. 10–Clip. 11–O-ring seal. 12–Spring. 13–Bolt. 14–Retainer.

ASSEMBLY

1. Clean the filter parts thoroughly.
2. Inspect the by-pass valve plunger and the surface against which it seats in the filter base, and replace the plunger if worn or damaged.
3. Replace any seals or gaskets which are not in good condition.
4. Assemble the filter assembly in the reverse order of disassembly.

OIL FILLER

The oil filler is part of the oil pan cover assembly located on the left side of the engine.

Disassembly and Assembly

Remove the gaskets **(2)** and plate from within the cover assembly and replace if necessary.

Clean all parts and assemble in reverse order of disassembly.

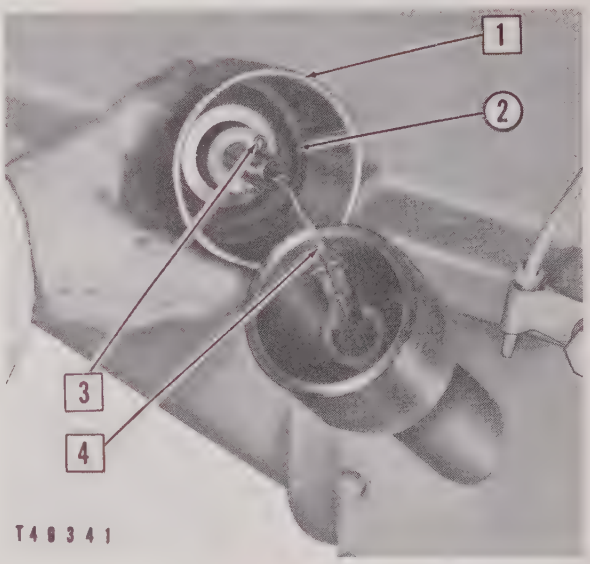

PREPARING TO REMOVE COVER ASSEMBLY

☐ Remove

1–Cover assembly. 2–Gasket. 3–Cotter pin. 4–Cable assembly.

CRANKCASE BREATHER

Removal and Installation

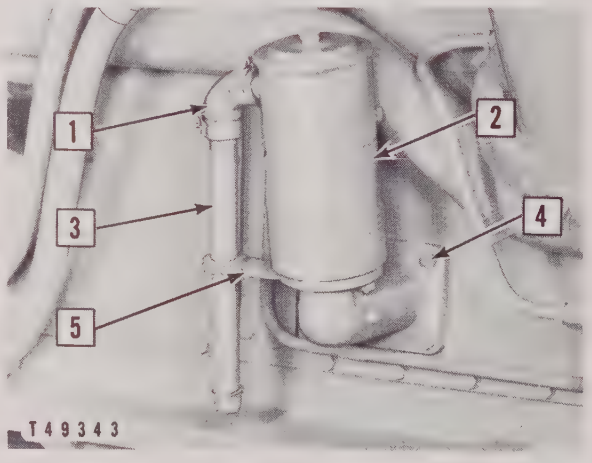

PREPARING TO REMOVE BREATHER ASSEMBLY

☐ Remove

1–Elbow. 2–Breather assembly. 3–Tube. 4–Nut (four). 5–Brace.

When installing the breather, replace the gasket if damaged.

Disassembly and Assembly

NOTE

The lower element in the breather assembly **(3)** is part of the assembly and cannot be removed.

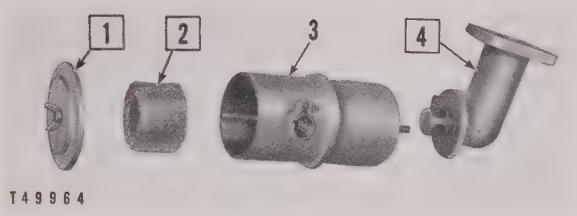

DISASSEMBLING BREATHER

☐ Remove

1–Cover assembly. 2–Element. 3–Breather assembly. 4–Elbow assembly.

Clean the elements in the upper and lower portions of the breather assembly **(3)** and remove all traces of the cleaning solution.

Inspect and replace all damaged parts or gaskets and assemble in reverse order of disassembly.

TURBOCHARGER LUBRICATION VALVE

Removal and Disassembly

The turbocharger lubrication valve can be removed without removing or disconnecting the lines as follows:

Remove the four bolts **(1)** which secure the adapter **(2)** and the valve body **(3)** to the engine side cover.

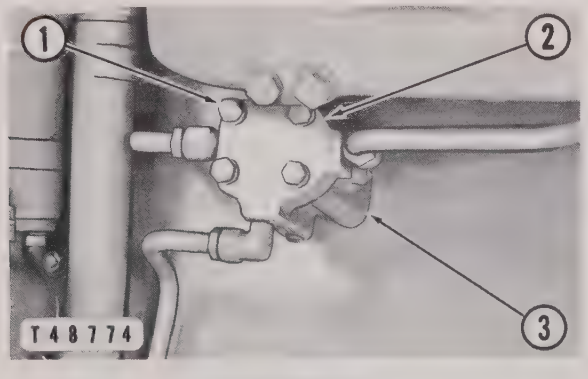

VALVE REMOVAL
1–Bolt. 2–Adapter. 3–Valve body.

Pull the adapter away from the engine far enough to slide the valve body from between the adapter and the side cover without damaging the gaskets.

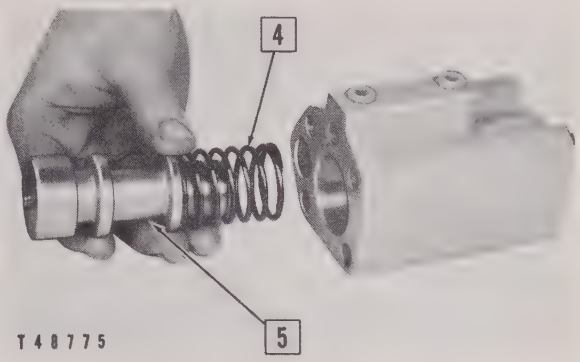

VALVE BODY DISASSEMBLY

☐ Remove

4–Spring. 5–Plunger.

Inspect and replace any damaged or worn parts or gaskets.

Sump Pump

Normally, marine engine installations are made in surroundings that offer only limited clearance beneath the engine oil pan. This makes it difficult in most cases, and impossible in other cases, to drain the oil by removing the drain plug in the bottom.

A hand operated sump pump mounted on the oil pan provides a method of removing oil from the engine oil sump and the sump of the marine gear. To pump the oil out of the engine, position the slot in the top of the valve toward the engine sump line. Position the slot toward the marine gear sump line to pump oil from the marine gear.

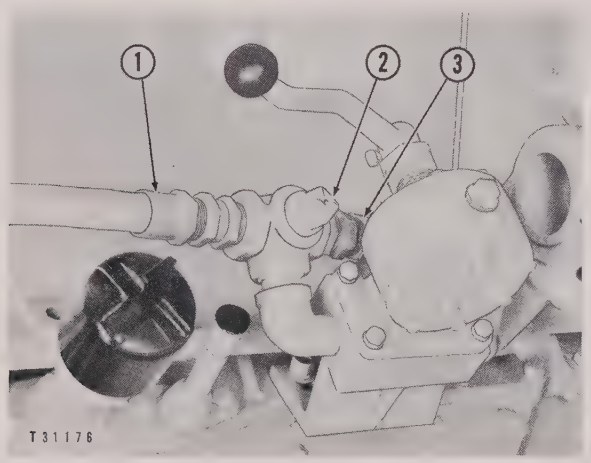

SUMP PUMP
(Earlier Engines)
1–Engine sump line. 2–Valve assembly.
3–Marine gear sump line.

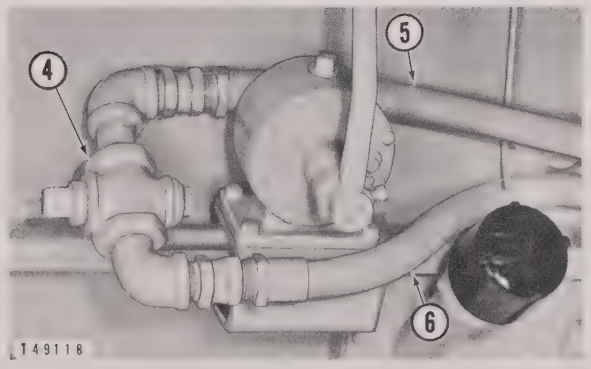

SUMP PUMP
(Later Engines)
4–Valve assembly. 5–Marine gear sump line.
6–Engine sump line.

REMOVAL AND INSTALLATION

NOTE

Cover the open ends of the oil lines to prevent entry of dirt. If either the marine gear or the diesel engine oil pan contains oil, tie the ends of the disconnected oil lines above the level of oil in these compartments to prevent the escape of oil.

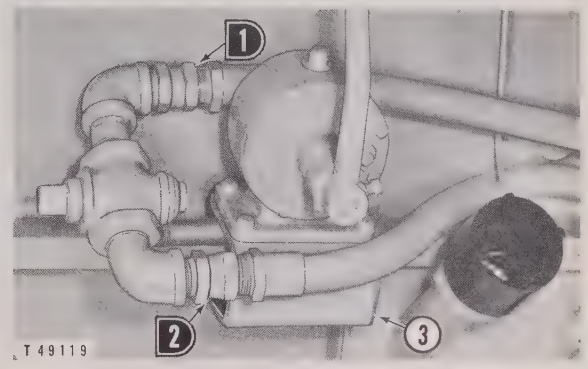

PREPARING TO REMOVE SUMP PUMP

D Disconnect

1–Oil line from marine gear. 2–Oil line from oil pan.
3–Sump pump support bracket.

Remove the bolts which secure the sump pump support bracket **(3)** to the oil pan and remove the sump pump and support bracket as an assembly.

Remove the valve assembly from the sump pump.

DISASSEMBLY AND ASSEMBLY

Remove the bolts which secure the sump pump to the support bracket and separate the two units.

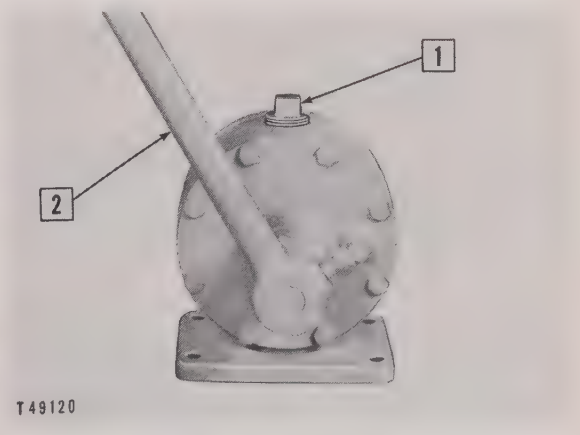

PREPARING TO DISASSEMBLE SUMP PUMP

☐ Remove

1–Outlet plug. 2–Operating handle.

Remove the bolts holding the front and rear lids **(9)** and **(12)** to the cylinder **(6)**.

Loosen the rear lid **(12)** by tapping gently on the end of the wing and shaft assembly **(10)** with a plastic hammer. Remove the lid.

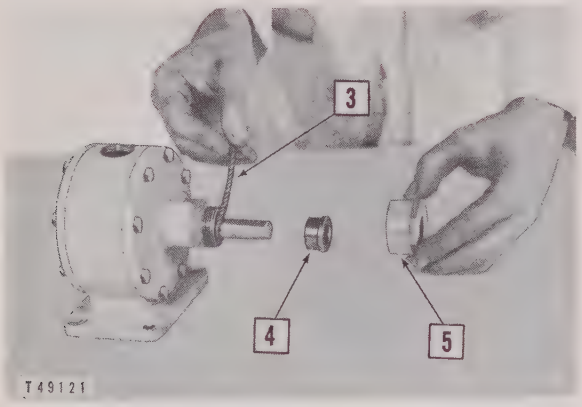

REMOVING PACKING AND NUT

☐ Remove

3–Packing. 4–Gland. 5–Nut.

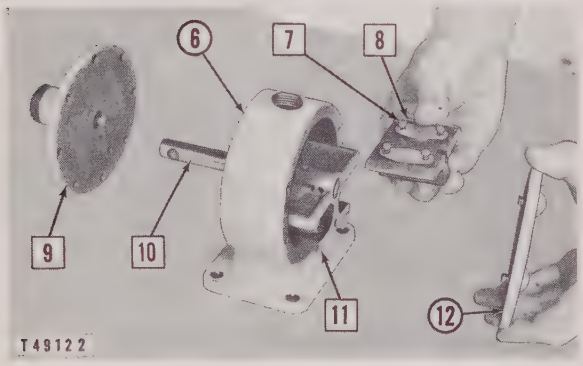

DISASSEMBLING SUMP PUMP

☐ Remove

6–Cylinder. 7–Valve. 8–Deck. 9–Front lid. 10–Wing and shaft assembly. 11–Deck. 12–Rear lid.

SUMP PUMP ASSEMBLY

When assembling the pump, the deck assemblies **(2)** and **(5)** must be placed in their original positions, with the valve plungers **(4)** toward the outlet port **(1)**. The deck assemblies are held in place by two pins located in the rear lid.

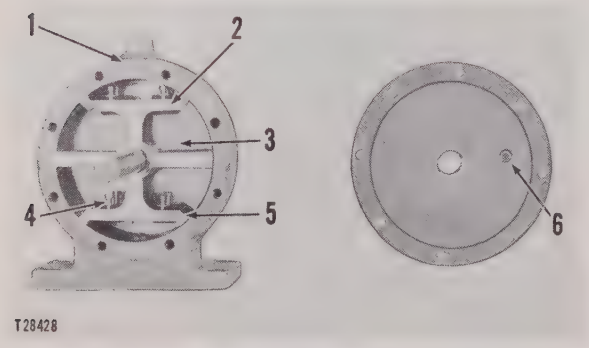

SUMP PUMP ASSEMBLY

1–Outlet port. 2–Outlet valve assembly. 3–Rear lid. 4–Plunger. 5–Inlet valve assembly. 6–Priming plug.

NOTE

If the sump pump is not used for an extended period of time, it may be necessary to prime the pump before it can be used. This can be done by removing the priming plug **(6)** and putting a small amount of oil in the pump.

Fuel System

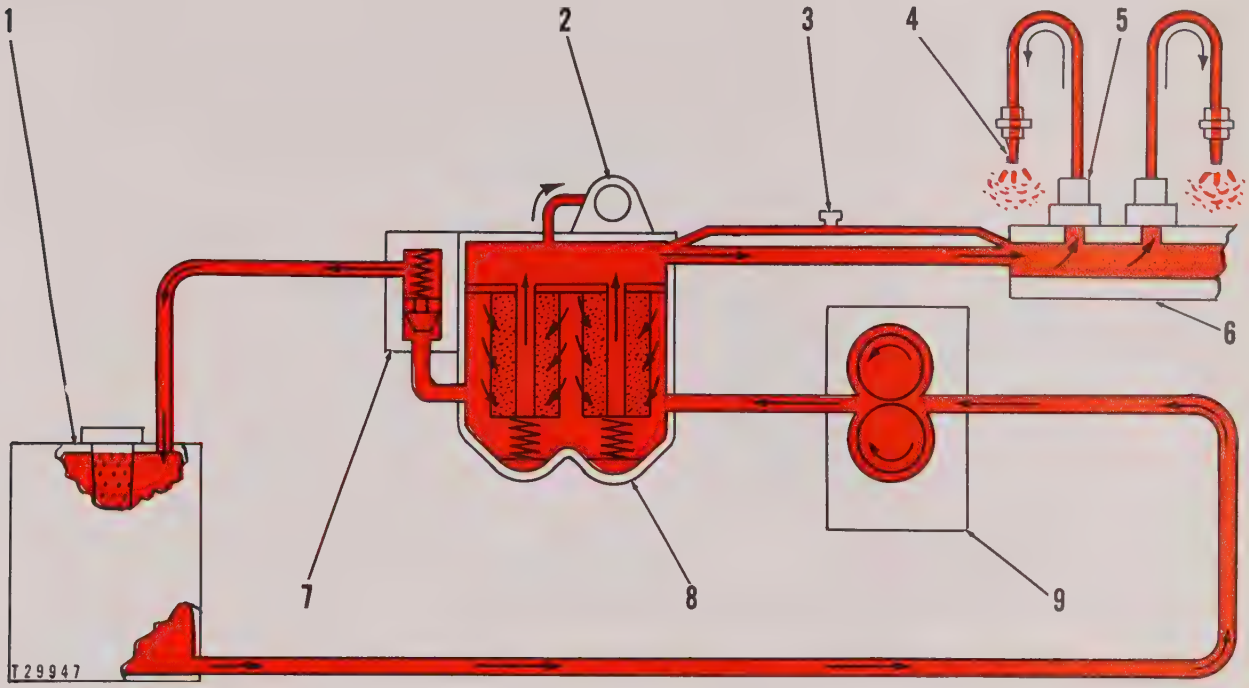

FLOW OF FUEL (SCHEMATIC)
1–Tank. 2–Pressure gauge. 3–Vent. 4–Injection valve. 5–Injection pump. 6–Injection. pump housing. 7–By-pass valve. 8–Filter housing. 9–Transfer pump.

As shown in the schematic drawing, fuel from the diesel engine fuel tank **(1)** is delivered by the fuel transfer pump **(9)** to the fuel filter housing **(8)**.

A by-pass valve **(7)** maintains approximately 15 pounds pressure on the fuel in the fuel filter housing. Excess fuel is by-passed back to the fuel tank. After the fuel is filtered, it is delivered through a manifold in the fuel injection pump housing **(6)** to the individual fuel injection pumps **(5)**. Fuel is pumped by the injection pumps to the fuel injection valves **(4)**.

One air bleed vent **(3)** is provided to bleed the air from the entire fuel system. It is located on the adapter housing which is between the fuel injection pump housing and the filter housing. The vent is connected to the air bleed manifold of the injection pump housing, as well as to the highest point in the fuel filter housing.

A pressure gauge **(2)** indicates the fuel pressure on the supply side of the fuel injection pump housing.

Lack of pressure on the gauge indicates difficulty in the supply side of the system. This could be caused by an empty diesel fuel tank, a closed shut-off valve at the tank, clogged filters, dirt under the by-pass valve, open vent valve, a faulty transfer pump or gauge.

Air in the system or water in the fuel can also be responsible for the engine firing irregularly or failing to start.

If, after eliminating the above possibilities, there still seems to be something wrong with the fuel system, check the injection side of the system. Fuel injection pumps and fuel injection valves can be checked as described in the topic, FUEL INJECTION EQUIPMENT.

Many times the fuel system is blamed when the fault lies elsewhere. A smoky exhaust may be caused by faulty fuel injection valves. But it can also be caused by a dirty air cleaner, overloading at high altitudes or badly worn piston rings.

Irregular firing can be caused by faulty fuel injection valves. It can also be caused by the burning of excessive lubricating oil which gets past worn piston rings, or new rings which have not become fully seated.

Fuel System

(With Torque Converter Fluid Charging System)

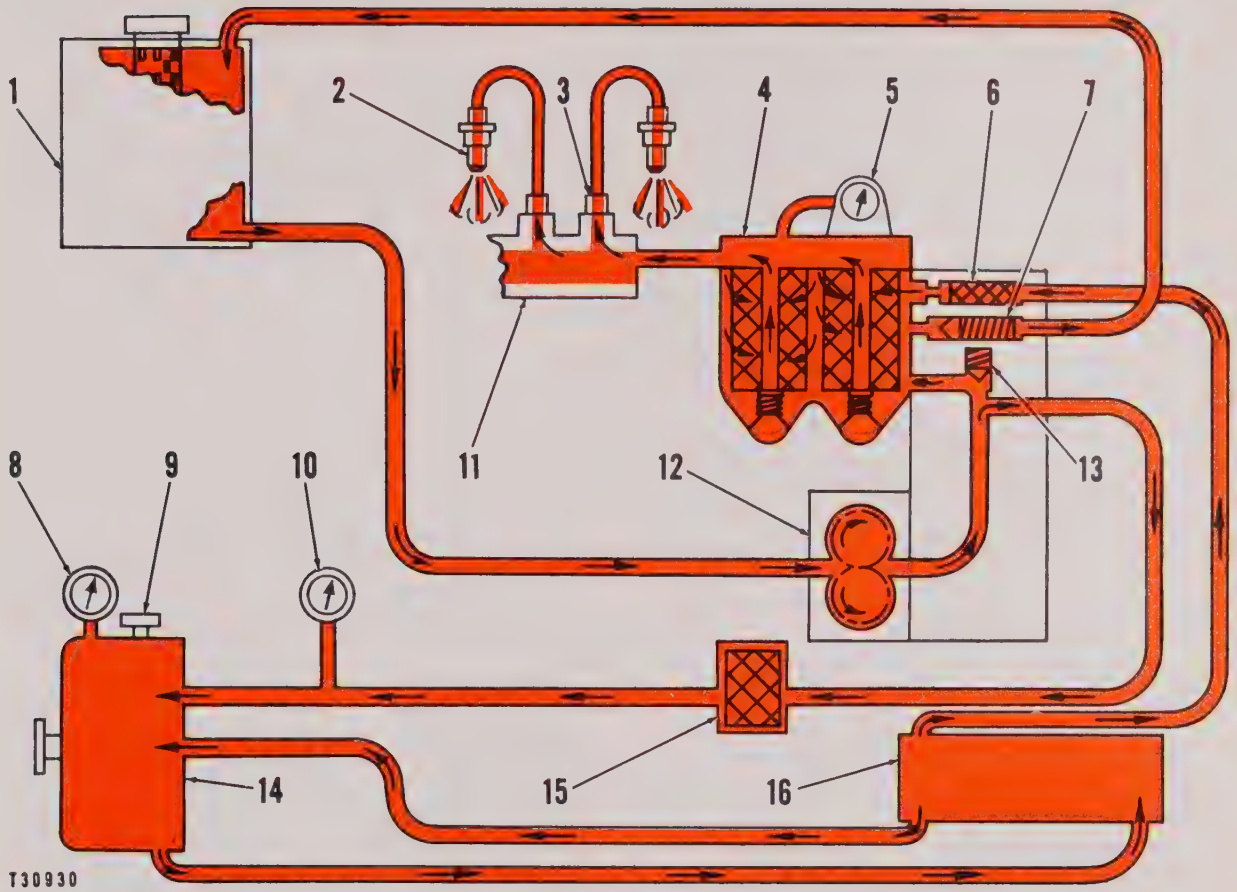

FLOW OF FUEL
(Schematic)

1–Fuel supply tank. 2–Fuel injection valve. 3–Injection pump. 4–Fuel filter housing. 5–Fuel pressure gauge. 6–Orifice. 7–By-pass valve. 8–Fluid temperature gauge. 9–Cap. 10–Fluid pressure gauge. 11–Fuel injection pump housing. 12–Fuel transfer pump. 13–Charging valve. 14–Torque converter. 15–Fluid filter. 16–Converter fluid cooler.

As shown in the schematic drawing, fuel from the fuel supply tank **(1)** is delivered to the fuel transfer pump **(12)** which pumps fuel to the fluid charging valve **(13)**. The fuel, under pressure, passes through the fluid filter **(15)** and then to the torque converter **(14)**. When the normal pressure (50-60 PSI) within the charging system has been reached, the fluid charging valve **(13)** opens and permits the passage of fuel to the fuel filter housing **(4)**.

One air bleed vent is provided to bleed the air from the entire fuel system. It is located on the adapter housing which is between the fuel injection pump housing and the filter housing. The vent is connected to the air bleed manifold of the injection pump housing, as well as to the highest point in the fuel filter housing.

The rotating impeller of the torque converter creates a pressure differential between the center of the converter and the outer periphery of the fluid path. This pressure differential is utilized to force the fluid through the fluid cooler **(16)** to be cooled by the engine coolant. A return passage delivers the fluid back into the converter. From the top of the fluid cooler, a bleed line and orifice **(6)** continuously bleed off excess fuel and any entrapped air in the charging system to the fuel filter housing **(4)**. Periodically inspect and clean the tiny filter at the orifice **(6)**.

A filler cap **(9)** is provided for filling the converter fluid system when the converter has been drained.

When the system is properly filled and vented, the torque converter fluid pressure gauge **(10)** indi-

cator moves instantly to the normal range when the diesel engine is started.

The fluid temperature gauge **(8)** registers the operating temperature of the torque converter fluid. A fuel pressure gauge **(5)** indicates the fuel pressure on the supply side of the fuel injection pump housing.

A fuel by-pass valve **(7)** maintains approximately 15 pounds pressure on the fuel in the fuel filter housing. Excess fuel is returned to the fuel supply tank **(1)**.

Filtered fuel is forced through a manifold in the fuel injection pump housing **(11)** to the individual fuel injection pumps **(3)**. Fuel is pumped by the injection pumps to the injection valves **(2)**.

Lack of pressure on the fuel pressure gauge **(5)** indicates difficulty in the supply side of the system. This could be caused by an empty diesel fuel tank, a closed shut-off valve at the tank, clogged filters, dirt under the by-pass valve, open vent valves, a faulty transfer pump or gauge.

CAUTION

Whenever a torque converter fails, the entire torque converter fluid system must be cleaned thoroughly to remove all metal chips and particles before the converter is returned to operation. All lines, including those to the gauges, should be removed and cleaned. It is advisable to discard the torque converter cooler and install a new one if there is any doubt as to its being clean. Failure to take these precautions will probably result in recurrent failure.

Air in the system or water in the fuel can also be responsible for the engine firing irregularly or failing to start.

If, after eliminating the above possibilities, there still seems to be something wrong with the fuel system, check the injection side of the system. Fuel injection pumps and fuel injection valves can be checked as described in the topic, FUEL INJECTION EQUIPMENT.

Many times the fuel system is blamed when the fault lies elsewhere. A smoky exhaust may be caused by faulty fuel injection valves. But it can also be caused by a dirty air cleaner, overloading at high altitudes or badly worn piston rings.

Irregular firing can be caused by faulty fuel injection valves. It can also be caused by the burning of excessive lubricating oil escaping past worn piston rings, or new rings which have not become fully seated.

Fuel System

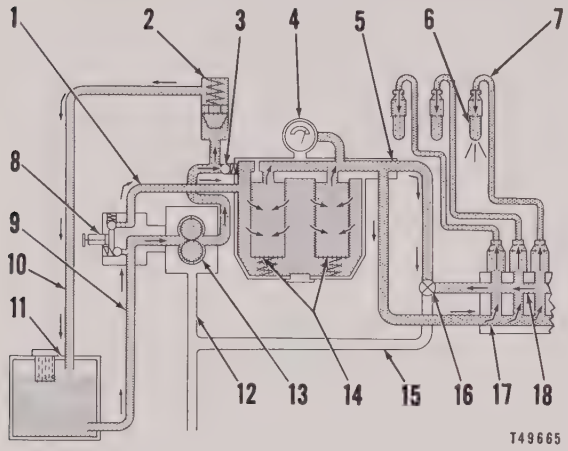

FLOW OF FUEL (SCHEMATIC)

1–Fuel line.
2–By-pass valve.
3–Check valve.
4–Fuel pressure gauge.
5–Air bleed passage.
6–Injection nozzle.
7–Injection line.
8–Fuel priming pump.
9–Fuel supply line.
10–By-pass valve return line.
11–Fuel tank.
12–Drain line.
13–Fuel transfer pump.
14–Fuel filters.
15–Vent line.
16–Air vent valve.
17–Fuel manifold.
18–Air bleed manifold.

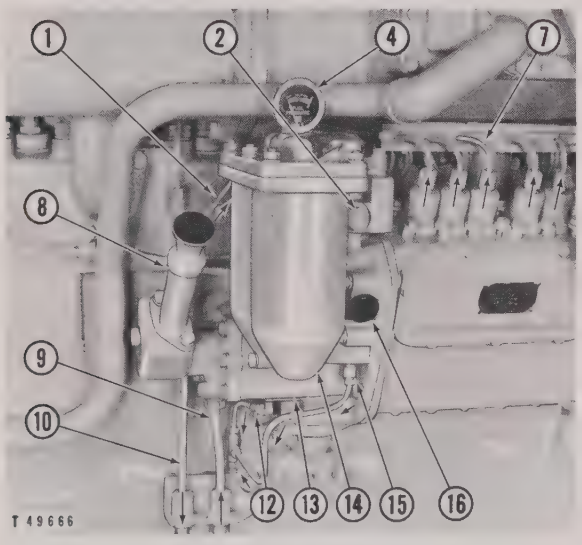

FLOW OF FUEL
(Nomenclature same as previous illustration)

Fuel for the diesel engine fuel system flows from the fuel supply tank **(11)** through the supply line **(9)** to the fuel transfer pump **(13)**, which is located on the front of the fuel filter housing adapter.

On engines equipped with direct electric or air starting motors, a fuel priming pump **(8)** is provided. It is located on the fuel transfer pump front cover. Priming the fuel system will allow the priming pump to force air and fuel through the fuel filters and the fuel injection pumps. For correct priming procedure, see the Operation and Maintenance Instructions.

The fuel transfer pump forces fuel through passages in the fuel filter housing to the fuel filters **(14)**. Excess fuel supplied by the pump passes through the by-pass valve **(2)**, through tube **(10)** and back to the fuel supply tank **(11)**. A drain line **(12)** is provided to remove any excess fuel that may leak along the shaft of the transfer pump.

After passing through the fuel filters, the fuel flows through passages in the filter housing cover and adapter to the fuel manifold **(17)**, which distributes fuel to the fuel injection pumps.

A cam-actuated injection pump for each cylinder forces fuel through an injection line **(7)** to the proper injection nozzle **(6)**. At the proper time, a definite quantity of fuel is injected into the precombustion chamber, by the injection pump, where it is ignited by the heat of compression.

One air vent valve **(16)** is provided to bleed the air from the entire fuel system. It is located in the fuel filter adapter housing, between the filters and the injection pump housing. When the vent valve **(16)** is opened and fuel is caused to flow by action of the transfer pump or priming pump, air escapes through the vent line **(15)**. An air bleed passage **(5)** allows air to escape from the top of the fuel filter housing cover and the air bleed manifold **(18)** allows air to escape from the injection pump housing.

When the fuel system is bled, the vent valve **(16)** should be left open until a solid stream of fuel flows out of the drain tube indicating that all air has been bled from the system.

The fuel pressure gauge **(4)** is located on top of the fuel filter housing cover. Lack of pressure on the gauge indicates difficulty in the supply side of the system. This could be caused by an empty fuel tank, clogged filters, dirt under the by-pass valve, open vent valve, or a faulty transfer pump or gauge.

To eliminate the possibility of a clogged filter causing a low fuel pressure gauge reading, install new filter elements.

Air in the system or water in the fuel can be responsible for the engine firing irregularly or failing to start.

If, after eliminating the above possibilities, there still seems to be something wrong with the fuel system, check the injection side of the system. Fuel injection pumps and fuel injection valves can be checked as described later.

Many times the fuel system is blamed when the fault lies elsewhere. A smoky exhaust may be caused by a dirty air cleaner, overloading at high altitude, or badly worn piston rings.

Irregular firing can be caused by faulty fuel injection valves. It can also be caused by the burning of excessive lubricating oil which gets past worn piston rings, or new rings which have not become fully seated.

Fuel Supply Equipment

FUEL TRANSFER PUMP

The conventional gear-type fuel transfer pump is driven from the front of the fuel pump camshaft and is mounted on the fuel filter adapter.

Removal and Installation

1. Disconnect the fuel supply line **(3)**, the drain line **(5)** and the fuel return line **(1)**.

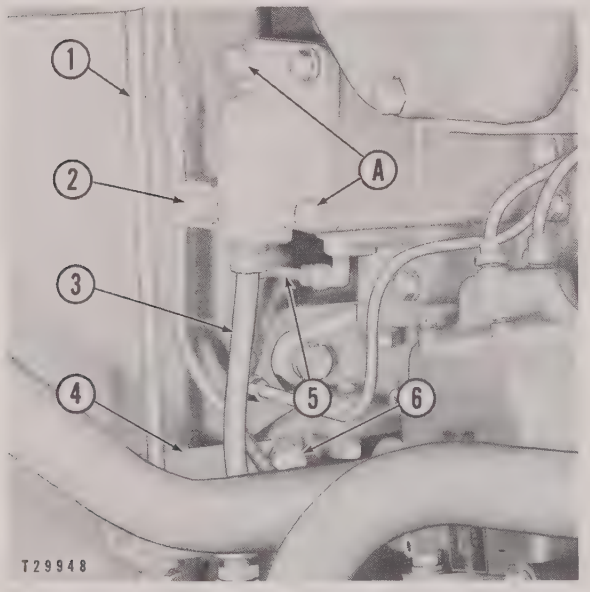

PREPARING TO REMOVE FUEL TRANSFER PUMP
1–Fuel return line. 2–Bolt. 3–Fuel supply line. 4–Bracket. 5–Drain line. 6–Bolt. A–Ground body bolts.

2. Remove the bolt **(6)** securing the bracket **(4)** to the engine block.

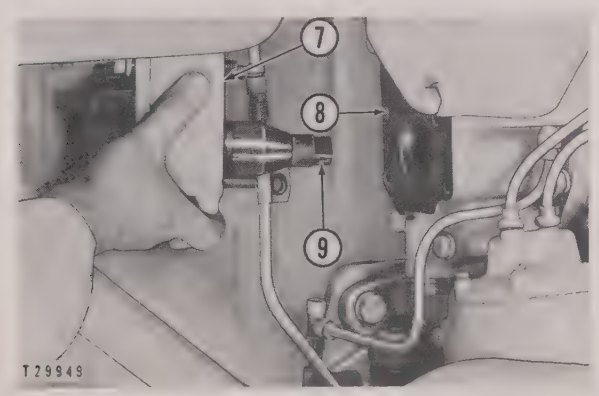

FUEL TRANSFER PUMP REMOVED
7–Transfer pump. 8–Fuel filter adapter housing. 9–Tang.

3. Remove the bracket **(4)** and the lines **(1)** and **(3)**.

4. Loosen the four bolts **(2)** and remove the transfer pump **(7)** from the fuel filter adapter housing **(8)**.

NOTE

The two bolts **(A)** are ground body bolts and must be installed in the proper holes to locate the pump correctly.

5. Install in the reverse order of removal, being sure to engage the tang **(9)** into the mating slot in the fuel pump camshaft. Replace the gasket if damaged.

Disassembly

1. Remove the cover **(2)** from the body **(1)** and remove the seal **(3)**.

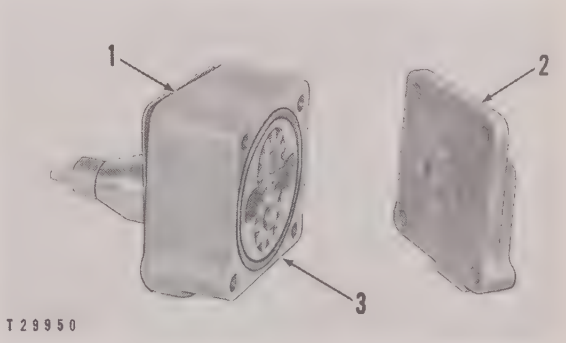

REMOVING THE COVER AND SEAL
1–Body. 2–Cover. 3–Seal.

2. Remove the idler gear **(6)**.

3. Remove the ring **(5)** and the drive gear **(4)**.

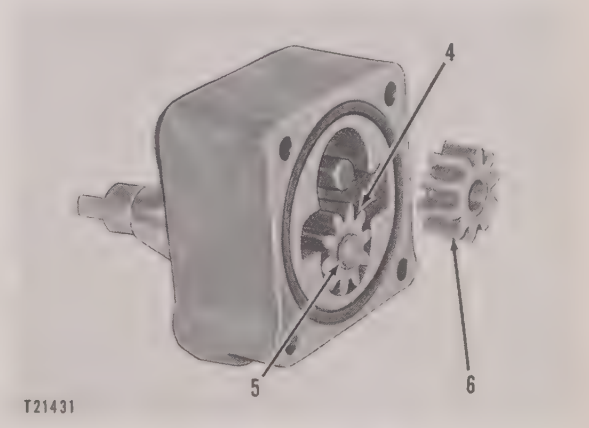

REMOVING THE GEARS
4–Drive gear. 5–Ring. 6–Idler gear.

4. Remove the key that positions the drive gear on the shaft.

5. Remove the shaft **(7)**, seat assembly **(11)** and seals as a unit from the pump body.

6. Remove the gasket **(14)** seal **(10)**, retainer **(13)**, and spring **(9)**, from the shaft.

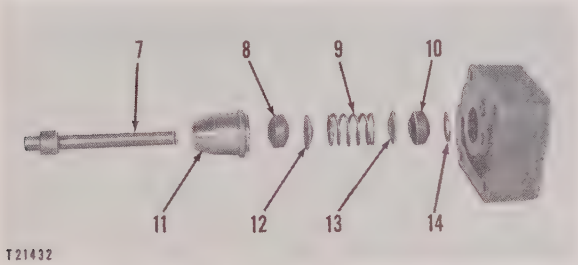

REMOVING THE SHAFT
7–Shaft. 8–Seal. 9–Spring. 10–Seal. 11–Seat assembly. 12–Retainer. 13–Retainer. 14–Gasket.

7. Remove the seat assembly **(11)** from the shaft.

8. Remove the seal **(8)** and retainer **(12)** from the seat assembly.

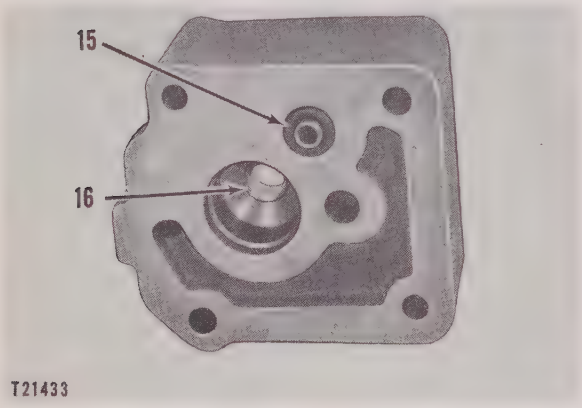

REPLACING THE BEARING AND FERRULE
15–Seal. 16–Bearing.

9. The bearing **(16)** in the pump body and the bearing in the seat assembly can be pressed out and replaced if worn or damaged. Place the tapered edge toward the seals.

10. Replace the ferrule and seal **(15)** if damaged.

Assembly

1. Check all parts for wear and replace if necessary.

2. Install the seal **(2)** and retainer **(7)** into the seat assembly **(6)**.

3. Install the seat assembly on the shaft **(1)**.

4. Install the spring **(3)**, retainer **(8)**, seal **(4)**, and gasket **(9)** on the shaft **(1)**.

5. Install the shaft, seat assembly and seals as a unit into the body **(10)**.

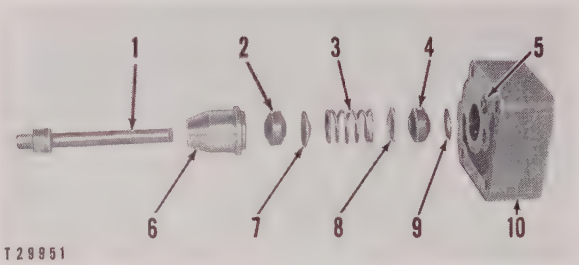

INSTALLING THE SHAFT AND SEAT ASSEMBLY
1–Shaft. 2–Seal. 3–Spring. 4–Seal. 5–Seal. 6–Seat assembly. 7–Retainer. 8–Retainer. 9–Gasket. 10–Body.

6. Install the key, drive gear **(11)** and ring **(12)** on the shaft.

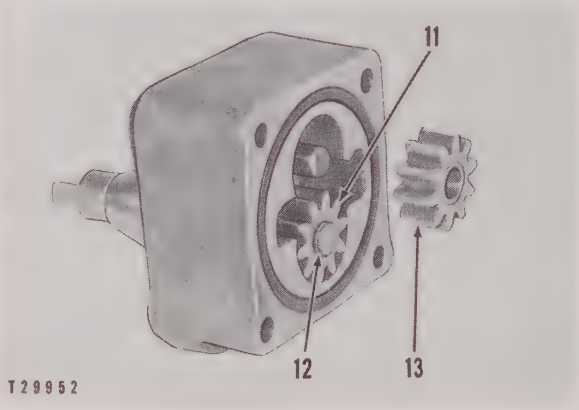

INSTALLING THE GEARS
11–Drive gear. 12–Ring. 13–Idler gear.

7. Install the idler gear **(13)** on the shaft.

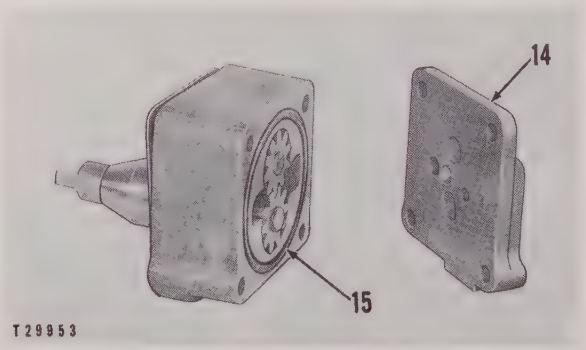

INSTALLING THE COVER
14–Cover. 15–Seal.

8. Replace the seals **(5)** and **(15)** if damaged.

9. Install the cover **(14)** on the body.

FUEL BY-PASS

The fuel transfer pump supplies more fuel than is required for engine operation. The fuel by-pass valve prevents excessively high pressure within the fuel system.

The by-pass valve may fail to function properly if dirt gets between the plunger and the seat. If the plunger leaks, there will be little, if any, fuel pressure. If the plunger sticks closed, the pressure will be excessive but will not shown on the gauge.

The by-pass valve assembly is installed into the adapter housing.

Removal and Installation

1. Remove the plug **(1)** and the gasket **(2)** from the adapter housing **(5)**.

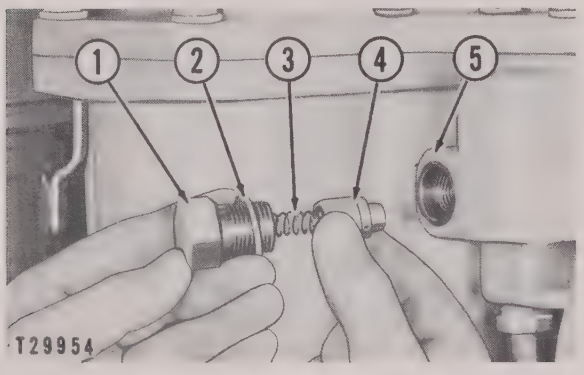

REMOVING THE BY-PASS VALVE
1–Plug. 2–Gasket. 3–Spring. 4–Plunger. 5–Adapter housing.

2. Remove the spring **(3)** and the plunger **(4)**.
3. Clean the contact surfaces. See that the seat is smooth and flat and that the sealing surface of the plunger is in good condition.
4. At the time of installation, carefully install the plunger, spring, gasket and plug into the adapter housing.

FUEL FILTER ADAPTER HOUSING

Removal and Installation

1. Drain the coolant from the radiator and remove the diesel fuel filter and the fuel transfer pump. See the covering topics.
2. Remove the starting engine exhaust tube **(3)**.
3. Remove the drain line **(5)**.
4. Remove the bolts which secure the fuel filter adapter housing **(1)** to the drain bracket **(4)** and the fuel injection pump housing **(2)**, and remove the fuel filter adapter housing.
5. Replace the ferrules **(6)** and the seal **(7)** if damaged.

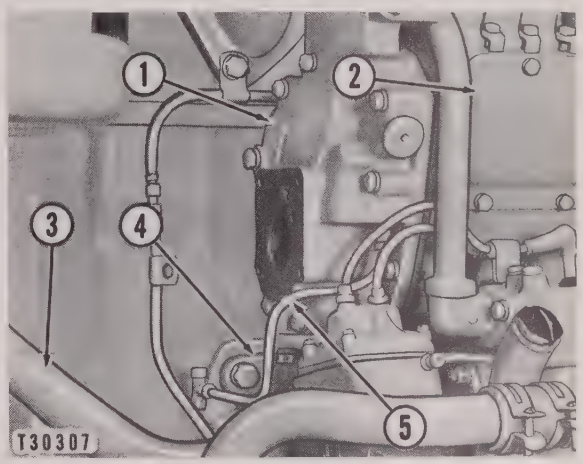

PREPARING TO REMOVE FUEL FILTER ADAPTER HOUSING
1–Fuel filter adapter housing. 2–Fuel pump housing. 3–Exhaust tube. 4–Drain bracket. 5–Drain line.

6. Install in the reverse order of removal.

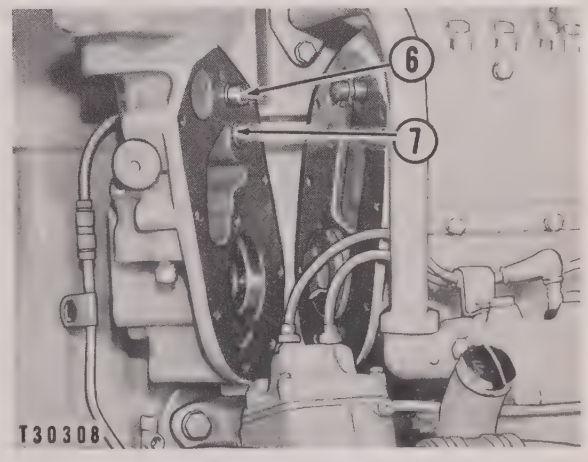

FUEL FILTER ADAPTER HOUSING REMOVAL
6–Ferrule. 7–Seal.

FUEL FILTER

Removal and Installation

1. Drain the fuel from the filters.
2. Remove the bolts which secure the filter assembly **(1)** to the adapter assembly **(3)** and remove the filter assembly.
3. Replace the gasket **(2)** if damaged. Inspect the filter elements and install new ones if necessary.

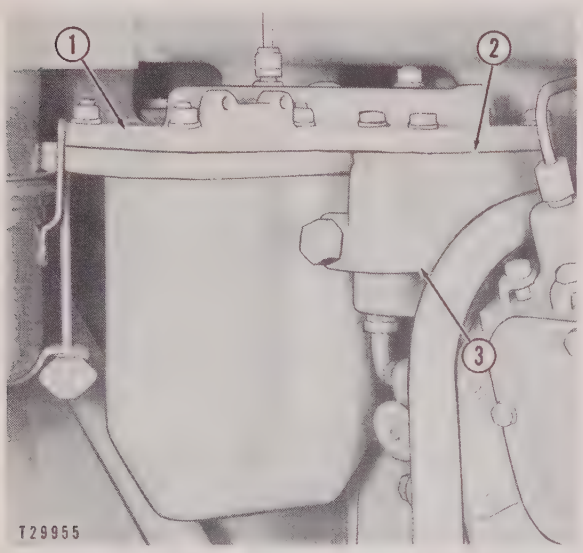

REMOVING THE FUEL FILTER ASSEMBLY
1–Filter assembly. 2–Gasket. 3–Adapter assembly.

Fuel Supply Equipment
(With Torque Converter)

FUEL TRANSFER PUMP

The conventional gear-type fuel transfer pump is driven from the front of the fuel pump camshaft and is mounted on the fuel filter adapter.

Removal and Installation

1. Disconnect the fuel supply lines **(3)**, the drain line **(5)** and the fuel return line **(1)**.

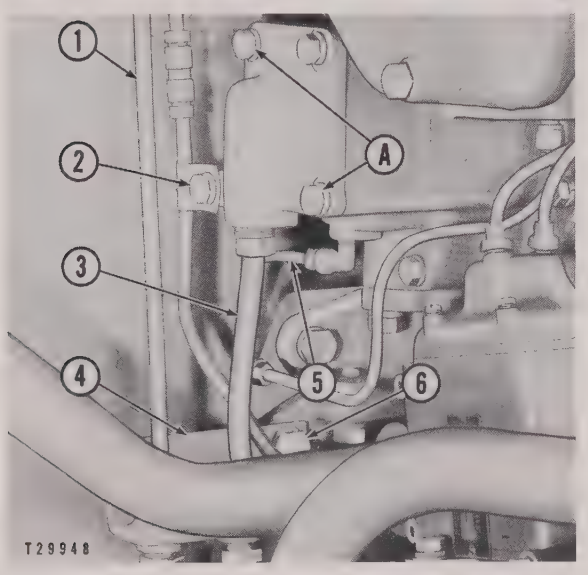

PREPARING TO REMOVE FUEL TRANSFER PUMP
1–Fuel return line. 2–Bolt. 3–Fuel supply line. 4–Bracket. 5–Drain line. 6–Bolt. A–Ground body bolts.

2. Remove the bolt **(6)** securing the bracket **(4)** to the engine block.

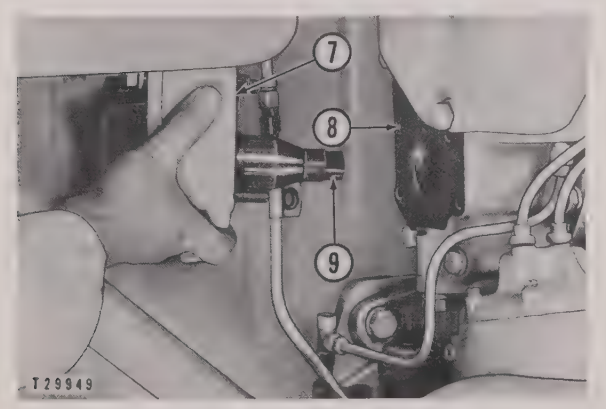

FUEL TRANSFER PUMP REMOVED
7–Transfer pump. 8–Fuel filter adapter housing. 9–Tang.

3. Remove the bracket **(4)** and the lines **(1)** and **(3)**.

4. Loosen the four bolts **(2)** and remove the transfer pump **(7)** from the fuel filter adapter housing **(8)**.

NOTE

The two bolts **(A)** are ground body bolts and must be installed in the proper holes to locate the pump properly.

5. Install in the reverse order of removal, being sure to engage the tang **(9)** into the mating slot in the fuel pump camshaft. Replace the gasket if damaged.

Disassembly

1. Remove the cover **(2)** from the body **(1)** and remove the seal **(3)**.

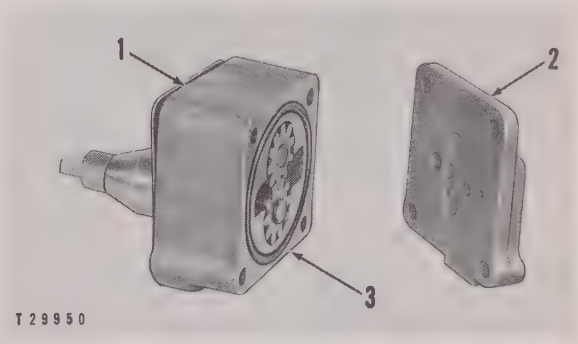

REMOVING THE COVER AND SEAL
1–Body. 2–Cover. 3–Seal.

2. Remove the idler gear **(6)**.

3. Remove the ring **(5)** and the drive gear **(4)**.

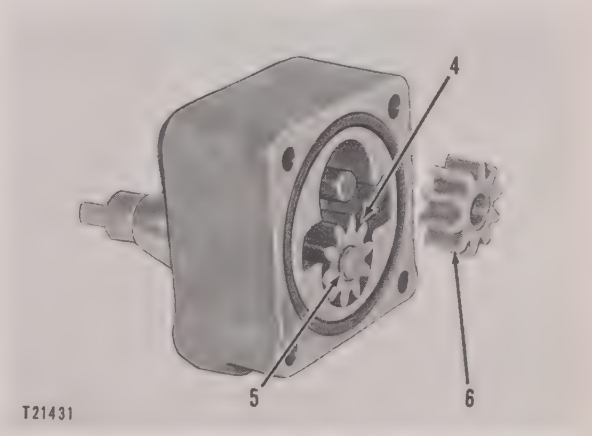

REMOVING THE GEARS
4–Drive gear. 5–Ring. 6–Idler gear.

4. Remove the key that positions the drive gear on the shaft.

5. Remove the shaft **(7)**, seat assembly **(11)** and seals as a unit from the pump body.
6. Remove the gasket **(14)**, seal **(10)**, retainer **(13)**, and spring **(9)** from the shaft.
7. Remove the seat assembly **(11)** from the shaft.

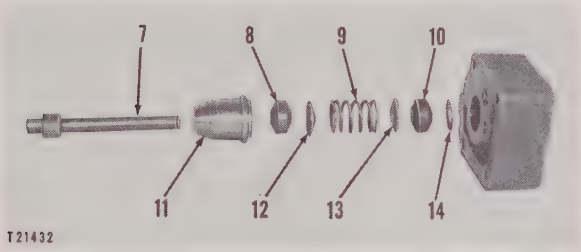

REMOVING THE SHAFT
7–Shaft. 8–Seal. 9–Spring. 10–Seal. 11–Seat assembly. 12–Retainer. 13–Retainer. 14–Gasket.

8. Remove the seal **(8)** and retainer **(12)** from the seat assembly.
9. The bearing **(16)** in the pump body and the bearing in the seat assembly can be pressed out and replaced if worn or damaged. Place the tapered edge toward the seals.

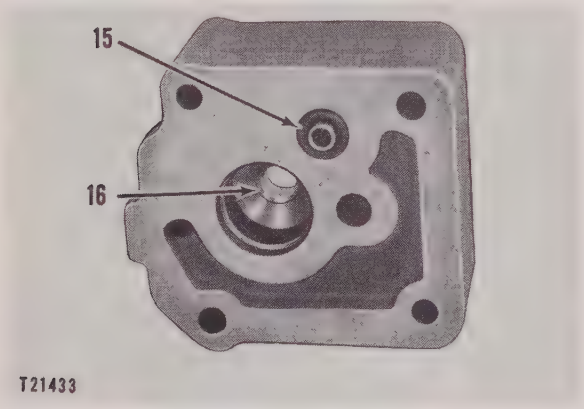

REPLACING THE BEARING AND FERRULE
15–Seal. 16–Bearing.

10. Replace the ferrule and seal **(15)** if damaged.

Assembly

1. Check all parts for wear and replace if necessary.
2. Install the seal **(2)** and retainer **(7)** into the seat assembly **(6)**.
3. Install the seat assembly on the shaft **(1)**.
4. Install the spring **(3)**, retainer **(8)**, seal **(4)**, and gasket **(9)** on the shaft **(1)**.
5. Install the shaft, seat assembly and seals as a unit into the body **(10)**.

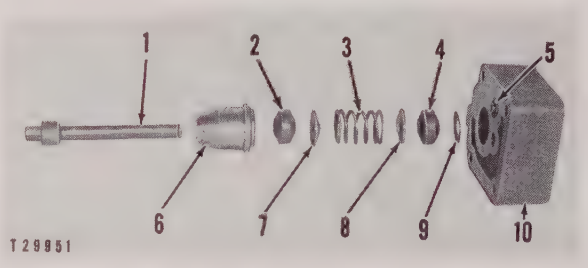

INSTALLING THE SHAFT AND SEAT ASSEMBLY
1–Shaft. 2–Seal. 3–Spring. 4–Seal. 5–Seal. 6–Seat assembly. 7–Retainer. 8–Retainer. 9–Gasket. 10–Body.

6. Install the key, drive gear **(11)** and ring **(12)** on the shaft.

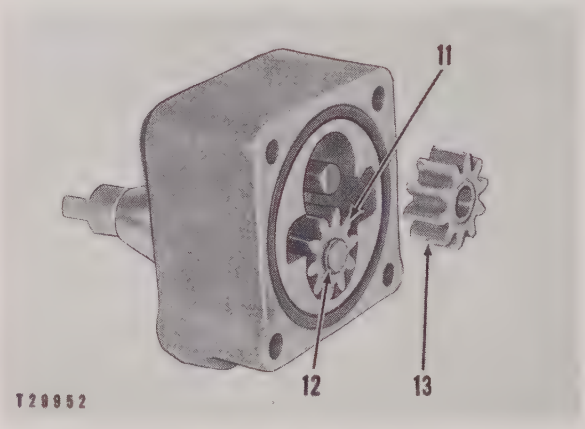

INSTALLING THE GEARS
11–Drive gear. 12–Ring. 13–Idler gear.

7. Install the idler gear **(13)** on the shaft.

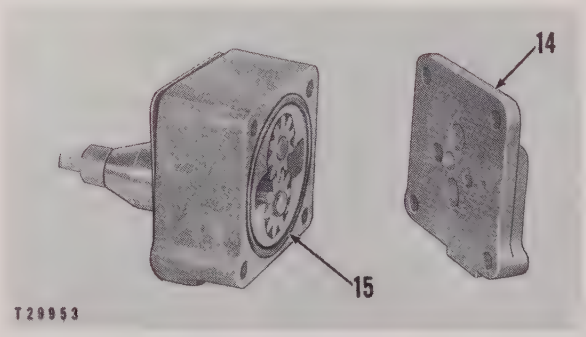

INSTALLING THE COVER
14–Cover. 15–Seal.

8. Replace the seals **(5)** and **(15)** if damaged.
9. Install the cover **(14)** to the body.

FUEL FILTER

Removal and Installation

Drain the fuel from the filters.

Remove the bolts which secure the filter assembly **(1)** to the adapter assembly **(3)** and remove the filter assembly.

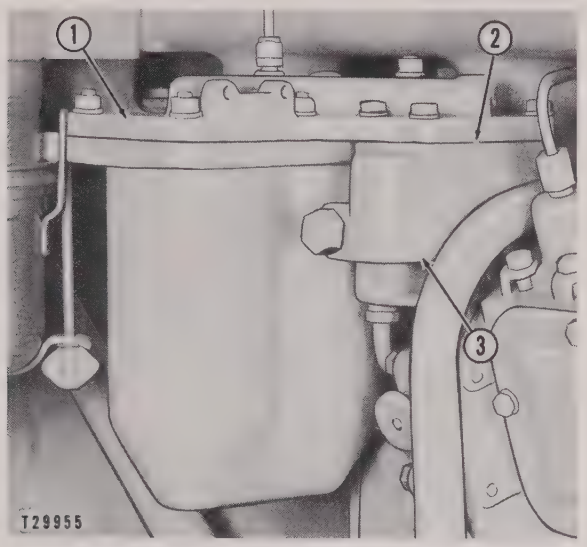

REMOVING THE FUEL FILTER ASSEMBLY
1–Filter assembly. 2–Gasket. 3–Adapter assembly.

Replace the gasket **(2)** if damaged.

Inspect the filter elements and replace if necessary.

CHARGING VALVE ADAPTER HOUSING

Removal and Installation

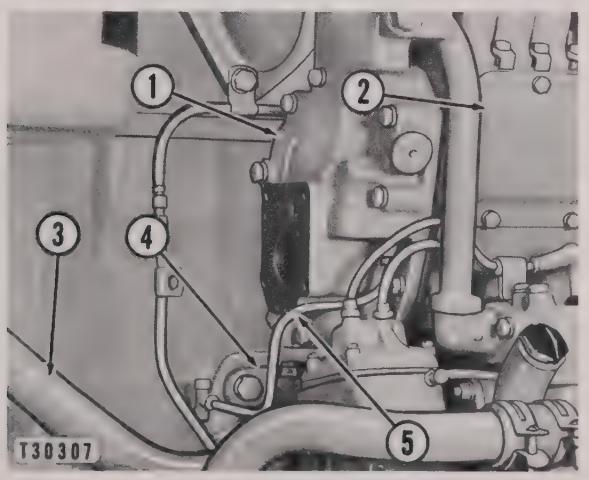

PREPARING TO REMOVE CHARGING VALVE ADAPTER HOUSING
1–Charging valve adapter housing. 2–Fuel pump housing. 3–Exhaust tube. 4–Drain bracket. 5–Drain line.

1. Drain the coolant from the radiator and remove the diesel engine fuel filter and fuel transfer pump. See the covering topics.
2. Remove the starting engine exhaust tube **(3)**.
3. Remove the drain line **(5)**.
4. Remove the bolts which secure the charging valve adapter housing **(1)** to the drain bracket **(4)** and the fuel injection pump housing **(2)**, and remove the charging valve adapter housing.

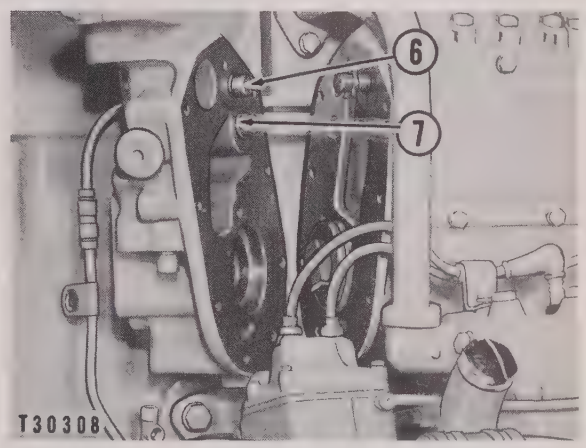

CHARGING VALVE ADAPTER HOUSING REMOVAL
6–Ferrule. 7–Seal.

5. Replace the ferrules **(6)** and the seals **(7)**, if damaged.
6. Install in the reverse order of removal.

NOTE

After the charging valve adapter housing has been installed, it will be necessary to bleed the air from the system.

Disassembly and Assembly

1. To remove the charging valve, remove the plug **(4)** and gasket **(3)** from the housing.

NOTE

Do not lose the spacers inside the plunger **(2)**.

2. Remove the spring **(1)** and plunger **(2)**.
3. To remove the by-pass valve, remove the plug **(8)** and gasket **(6)** from the housing.
4. Remove the spring **(7)** and plunger **(5)**. The valves may fail to function properly if dirt gets between the plungers and the seats. After clean-

ing the contact surfaces, see that the seats are smooth and flat and that the sealing surface of the plungers are in good condition.

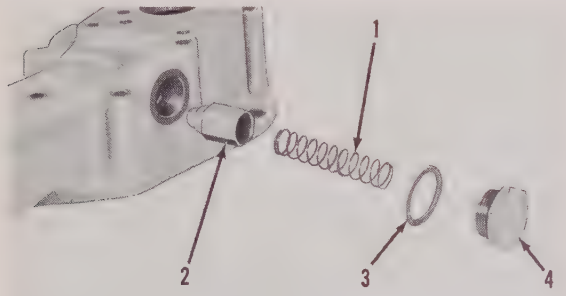

T21460

REMOVING THE CHARGING VALVE
1–Spring. 2–Plunger. 3–Gasket. 4–Plug.

NOTE

If the plunger **(5)** leaks, there will be little, if any, fuel pressure. If the plunger sticks closed, the pressure will be excessive but will not show on the gauge.

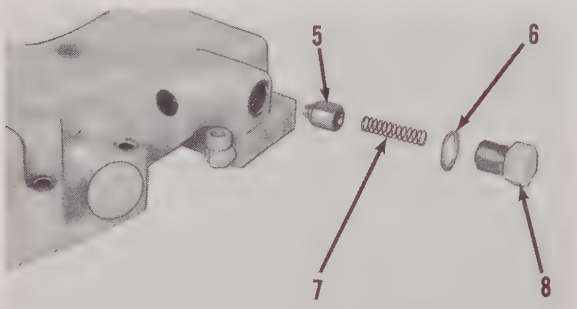

T21461

REMOVING THE BY-PASS VALVE
5–Plunger. 6–Gasket. 7–Spring. 8–Plug.

5. Remove the plug **(10)** and gasket.

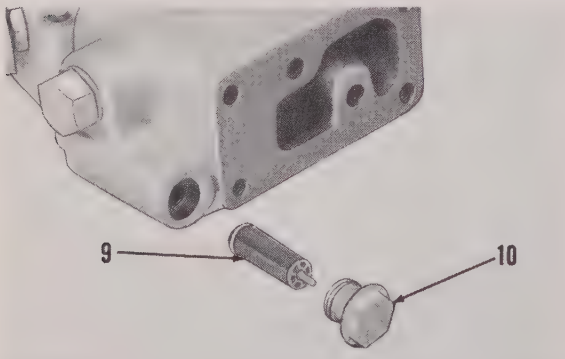

T21462

REMOVING THE FILTER ASSEMBLY
9–Filter. 10–Plug.

6. Remove the filter **(9)**.
7. Install the valves and filter in reverse order of removal.

Fuel Supply Equipment

FUEL TRANSFER PUMP

The conventional gear-type fuel transfer pump is driven from the front end of the fuel pump camshaft and is mounted on the fuel filter adapter.

Removal and Installation

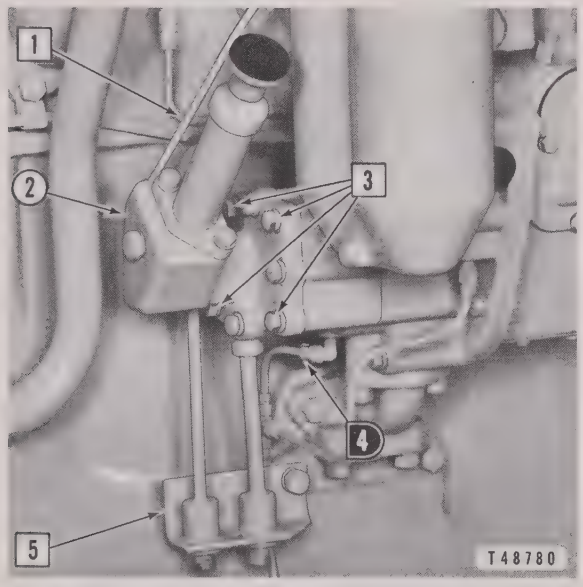

PREPARING TO REMOVE FUEL TRANSFER PUMP

☐ Remove ◗ Disconnect

1–Outlet line from priming pump to filter. 2–Fuel transfer pump and fuel priming pump. 3–Bolts. 4–Drain line. 5–Fuel supply and drain lines assembly.

Remove the fuel transfer pump and fuel priming pump **(2)** as a unit.

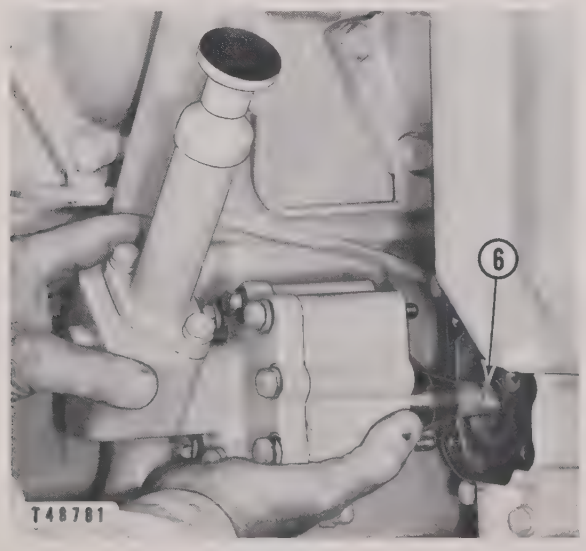

FUEL TRANSFER PUMP REMOVAL

6–Tang.

Replace the mounting gasket if damaged and be sure to engage the tang **(6)** into the mating slot in the fuel pump camshaft.

Disassembly and Assembly

1. Remove the four bolts which secure the priming pump base **(1)** to the body **(2)**.

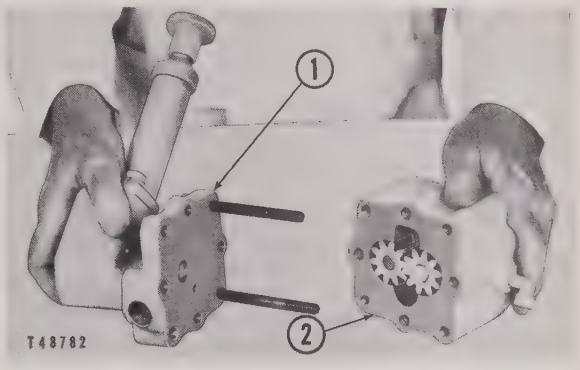

FUEL PRIMING PUMP BASE REMOVAL

1–Priming pump base. 2–Body.

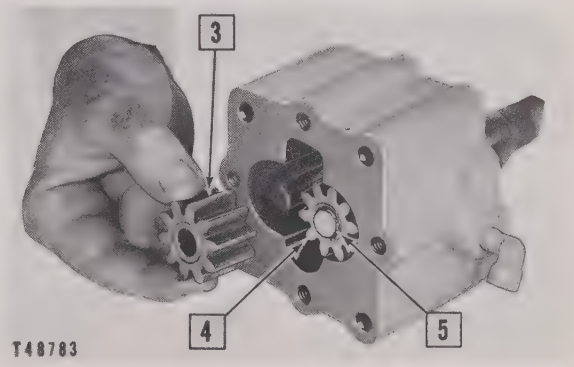

GEAR REMOVAL

☐ Remove

3–Idler gear. 4–Drive gear. 5–Ring.

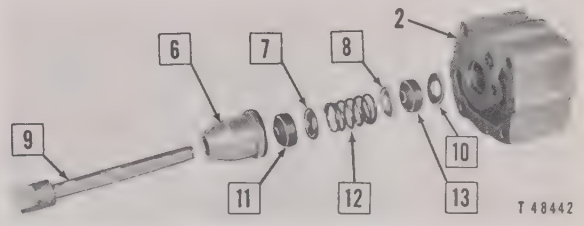

DRIVE SHAFT REMOVAL

☐ Remove

2–Body. 6–Seat assembly. 7–Retainer. 8–Retainer. 9–Shaft. 10–Gasket. 11–Seal. 12–Spring. 13–Seal.

NOTE

When assembling the pump, apply a thin film of Aviation Permatex No. 3, or its equivalent, to

the pump surface. Do not allow the Permatex to enter the pump.

2. Remove the key that positions the drive gear **(4)**.
3. Inspect all parts for wear or damage and replace if necessary.
4. Replace the seal and ferrule **(14)** if damaged.

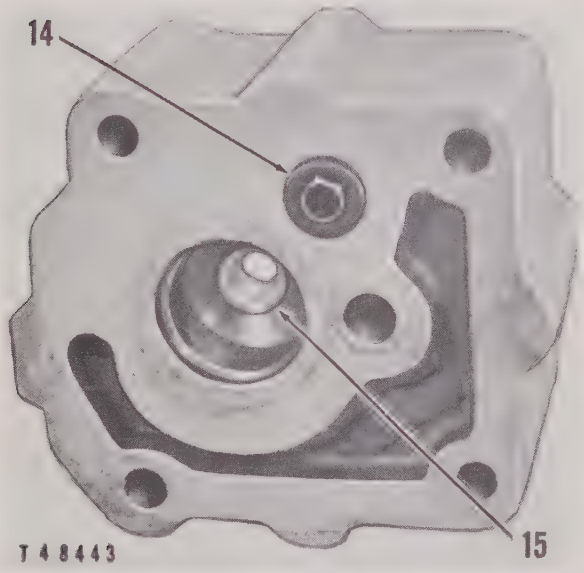

BEARING AND SEAL INSPECTION
14–Seal and ferrule. 15–Bearing.

5. Replace the bearing **(15)** in the pump body and the bearing in the seat assembly **(6)** if they are worn or damaged. Install with the chamfered edge toward the seals.

FUEL BY-PASS VALVE REMOVAL AND INSTALLATION

Inspect the gasket **(2)**, spring **(3)** and plunger **(4)** and replace if damaged or worn.

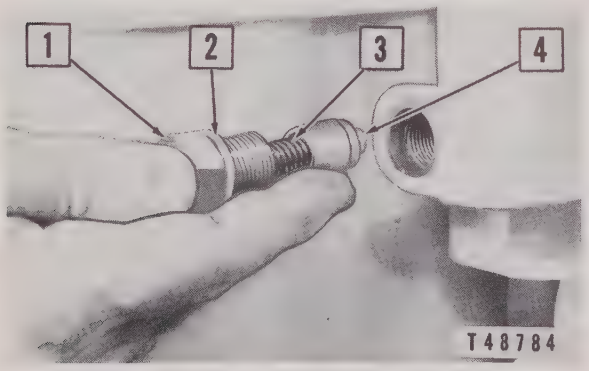

FUEL BY-PASS VALVE REMOVAL

☐ **Remove**

1–Plug. 2–Gasket. 3–Spring. 4–Plunger.

Inspect the plunger by-pass valve seat for lodged foreign particles, burrs and seat finish. Clean up the valve seat if necessary.

When assembling the fuel by-pass, make certain that the plunger is properly seated and that the spring is centered in the plunger and plug.

FUEL FILTER

Removal and Installation

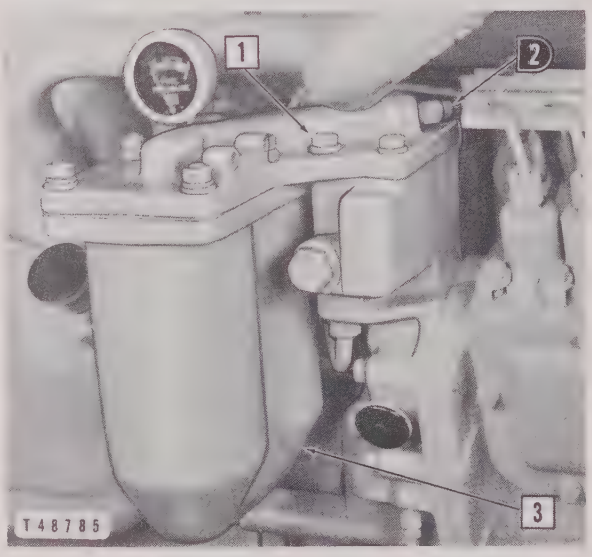

FUEL FILTER GROUP REMOVAL

☐ **Remove** ◗ **Disconnect**

1–Bolts (four). 2–Fuel line from fuel priming pump. 3–Fuel filter group.

1. Shut off the fuel at the tank.
2. Remove the plug and drain the fuel from the filter housing.
3. Inspect the gasket and replace if damaged.

Disassembly and Assembly

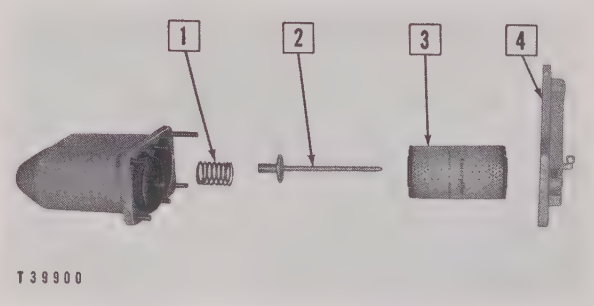

FUEL FILTER GROUP DISASSEMBLY

☐ **Remove**

1–Spring. 2–Rod. 3–Element assembly. 4–Cover assembly.

Inspect the gasket and replace if damaged.

FUEL FILTER ADAPTER HOUSING

Removal and Installation

Remove the fuel filter group and the fuel transfer pump. See the covering topic.

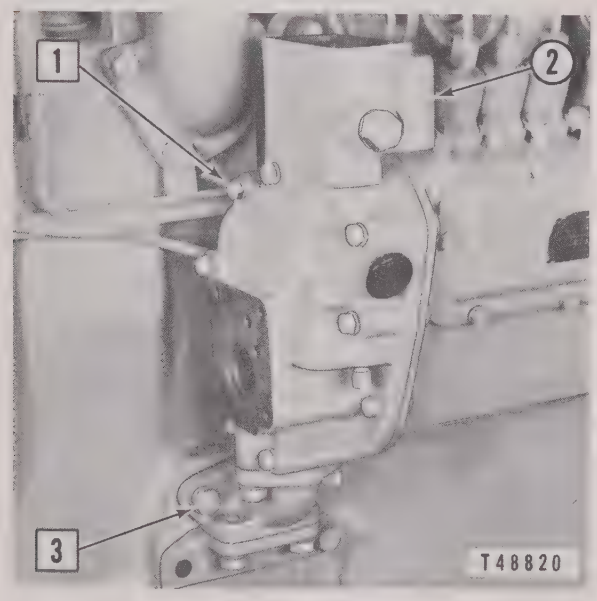

PREPARING TO REMOVE FUEL FILTER ADAPTER HOUSING

☐ Remove

1–Bolts (nine). 2–Adapter housing. 3–Bolts (three).

Remove the adapter housing **(2)** as illustrated.

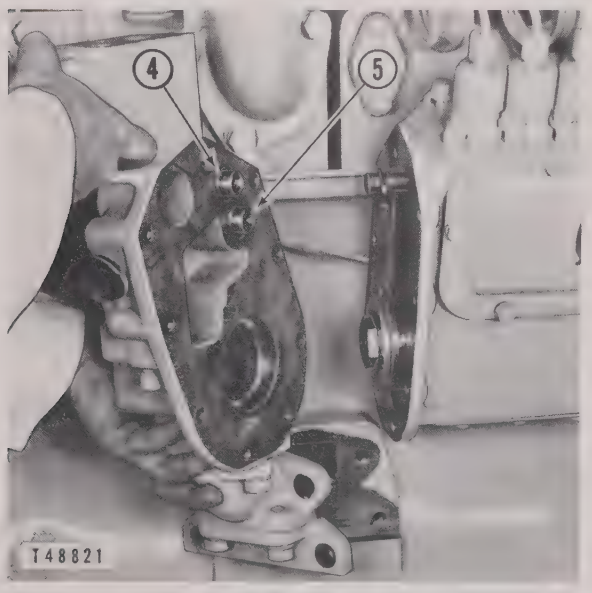

ADAPTER HOUSING REMOVAL

4–Seal. 5–Ferrule.

Inspect and replace if damaged the seals **(4)**, ferrules **(5)** and the mounting gasket.

Disassembly and Assembly

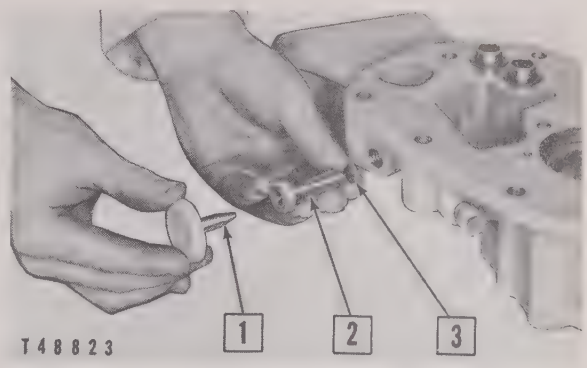

VENT VALVE REMOVAL

☐ Remove

1–Valve. 2–Seat. 3–Washer.

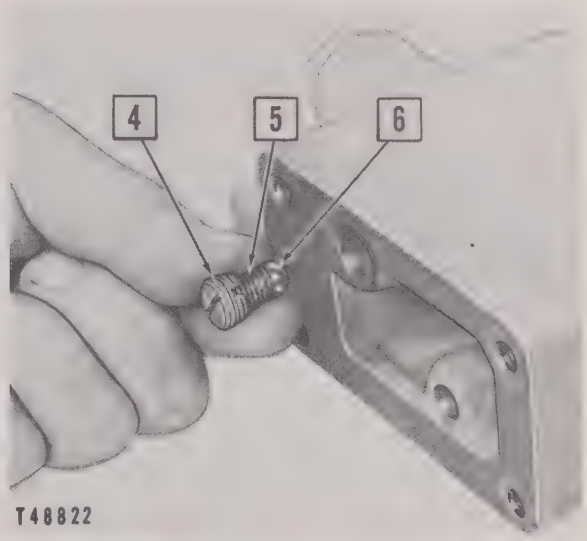

PRIMING PUMP CHECK VALVE REMOVAL

☐ Remove

4–Retainer. 5–Spring. 6–Ball.

Inspect and replace all damaged parts.

FUEL PRIMING PUMP
(If So Equipped)

Removal and Installation

Remove the fuel transfer pump. See the covering topic.

Remove the four bolts which secure the priming pump base **(1)** to the body **(2)**.

NOTE

When assembling the base on the body, apply a thin film of Aviation Permatex No. 3, or its

equivalent, to the pump surface. Do not allow the Permatex to enter the pump.

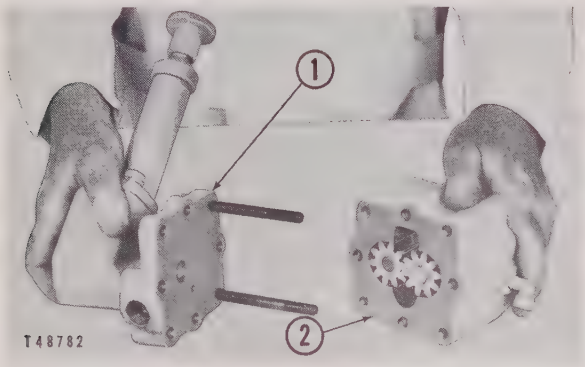

PRIMING PUMP BASE REMOVAL
1–Priming pump base. 2–Body.

Disassembly and Assembly

Separate the barrel assembly **(1)** from the base assembly **(2)**.

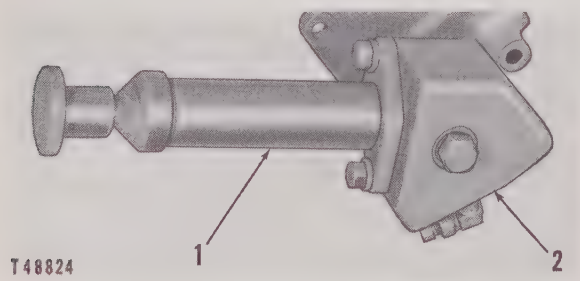

PREPARING TO DISASSEMBLE FUEL PRIMING PUMP
1–Barrel assembly. 2–Base assembly.

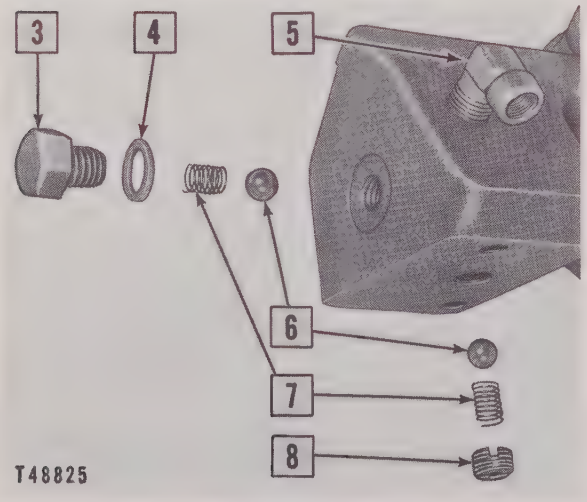

BALL CHECK VALVE REMOVAL

☐ Remove

3–Bolt. 4–Gasket. 5–Fitting. 6–Balls. 7–Springs. 8–Retainer.

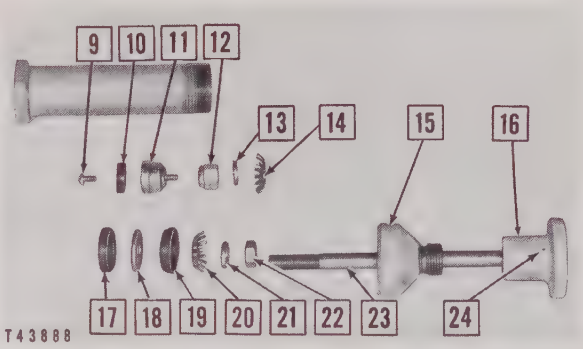

DISASSEMBLING THE BARREL ASSEMBLY

☐ Remove

9–Screw. 10–Washer. 11–Bearing. 12–Nut. 13–Washer. 14–Spring. 15–Cap. 16–Handle. 17–Cup. 18–Washer. 19–Cup. 20–Spring. 21–Washer. 22–Nut. 23–Rod. 24–Spring pin.

CAUTION

It is imperative that the bearing **(11)** fits tightly against the rod **(23)**. If the bearing works loose the balls can escape into the fuel system. If the bearing is to be replaced or if it is found to be loose, use a hollow head wrench to remove or tighten it.

Fuel Injection Equipment

The most likely causes for faulty fuel injection performance are:

1. Air in the fuel system.
2. Low fuel supply.
3. Water in the fuel.
4. Clogged fuel filters.
5. Insufficient fuel transfer pump pressure.

If these conditions are checked and corrected and the engine still does not perform properly, the fuel injection equipment should be checked.

CHECKING FUEL INJECTION EQUIPMENT

Before removing a fuel injection pump or valve for testing on an engine that is missing or puffing black smoke at the exhaust, a simple check can be made to determine which cylinder is causing the difficulty. With the engine running at a speed which makes the defect most pronounced, momentarily loosen the fuel line nut on the injection pump sufficiently to "cut out" the cylinder. Check each cylinder in the same manner. If one is found where loosening makes no difference in the irregular operation of the engine or causes puffing of black smoke at exhaust to cease, probably the pump and valve, for only that cylinder, need be tested.

FUEL INJECTION VALVE

The function of the fuel injection valves is to inject and atomize the fuel from the fuel injection pumps into the precombustion chambers. Irregular engine operation and smoking may be caused by an improperly operating injection valve.

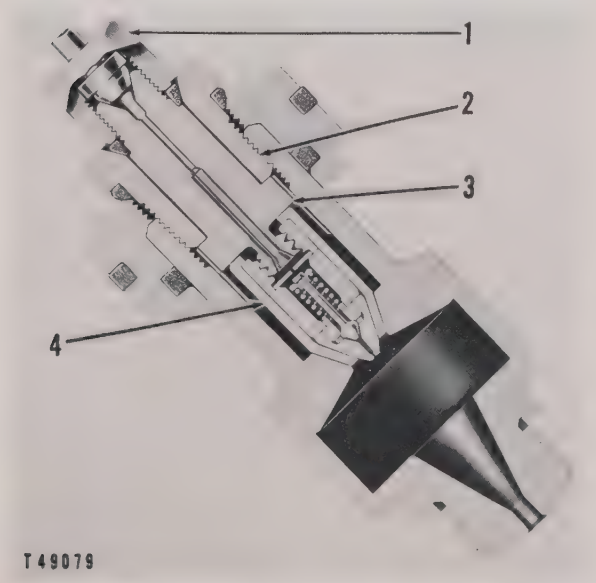

FUEL INJECTION VALVE CROSS-SECTION
1–Fuel line assembly. 2–Nut. 3–Body. 4–Nozzle assembly.

The fuel injection valves are installed in the precombustion chambers.

The fuel injection valve assembly consists of the body **(3)**, nut **(2)**, and the capsule-type nozzle assembly **(4)**.

Only the nozzle assembly need be replaced.

The nozzle assembly **(4)** and body **(3)** are held in place by the nut **(2)**, and they can be removed by loosening the fuel line assembly **(1)** and removing the nut and seal.

The body and the nozzle assembly can then be lifted out. The nozzle assembly is only finger-tight on the body.

When installing a fuel injection valve, always check the seats of both the nozzle and the precombustion chamber.

Tighten the nut **(2)** to the torque value given in the topic, SPECIFICATIONS, to assure proper seating of the nozzle assembly. Excessive tightness will damage the nozzle. Excessive looseness will allow the nozzle to leak and in some instances cause the nozzle case to bulge or split.

Cleaning Fuel Injection Valve

The operation of the engine will be affected if the orifice in the nozzle becomes partially filled with carbon. To correct this, remove the nozzle assembly from the valve body and clean the fuel discharge hole using the proper drill and a 5B1254 Chuck, which are part of the 5B1401 Cleaning Tool Group. If after cleaning, the valve does not operate properly the nozzle should be checked for leakage. See the topic, SPECIFICATIONS, for the correct drill.

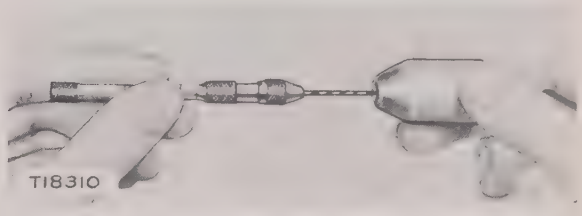

CLEANING FUEL INJECTION NOZZLE ASSEMBLY

CAUTION

Do not attempt to clean the carbon from the end of the injection nozzle with a wire brush or wheel. The only maintenance required on the injection nozzle is to clean the fuel discharge hole using the correct size drill as indicated.

Checking Fuel Injection Valve

The condition of a capsule-type nozzle assembly can be tested out of the engine on the Caterpillar Diesel Fuel Injection Test Apparatus. The spray characteristic, valve unseating pressure, and the rate of leakage of the nozzle assembly can be determined.

FUEL INJECTION PUMPS

Air in the fuel system is bled through the passage **(2)** when the vent valve is opened and fuel enters through passage **(6)**. The injection pump plungers **(4)** and the lifters **(8)** are lifted by cams on the camshaft **(9)** and always make a full stroke. Each pump measures the amount of fuel to be injected into its respective cylinder and delivers it to the fuel injection valve **(1)**. The amount of fuel pumped per stroke can be varied by turning the plunger in the barrel. The plunger is turned by the governor action through the rack **(7)** which meshes with the gear segment **(5)** on the bottom of the pump plunger.

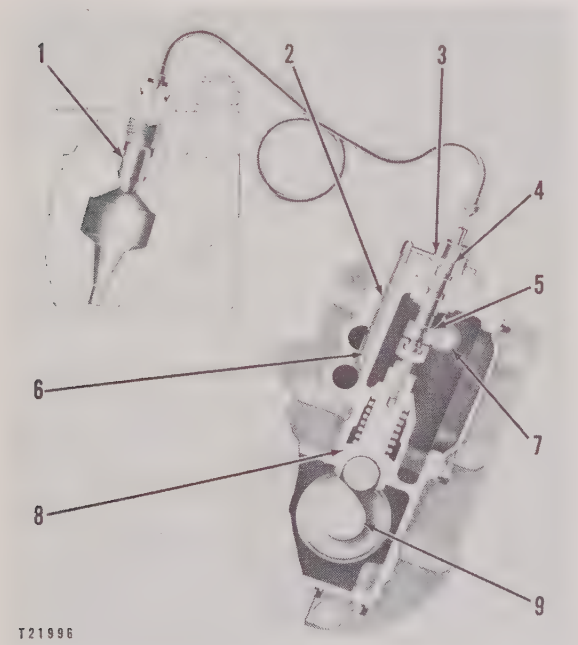

FUEL INJECTION PUMP
1–Injection valve. 2–Passage. 3–Inlet port. 4–Pump plunger. 5–Gear segment. 6–Passage. 7–Rack. 8–Lifter. 9–Camshaft.

Figures A, B, and C illustrate the functioning of an injection pump as the plunger makes a stroke.

In Fig. A the plunger is down and the inlet port **(3)** is uncovered. Fuel flows into the space above the plunger through the slot and into the recess around the plunger.

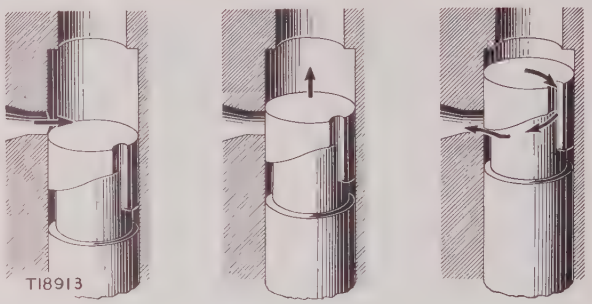

FIG. A
Port Uncovered
Fuel Enters Barrel

FIG. B
Port Covered
Injection Begins

FIG. C
Port Uncovered
Injection Ends

In Fig. B the plunger has started up and the port is covered. The fuel is trapped and will be forced through the check valve, fuel line and injection valve as the plunger moves upward.

In Fig. C the plunger has risen until the port is uncovered by the recess in the plunger. The fuel can now escape back through the port into the fuel manifold and injection will cease.

It will be noted that the recess in the pump plunger forms a helix around the upper end of the plunger. Figures D, E and F illustrate how rotating the pump plunger affects the quantity of fuel injected.

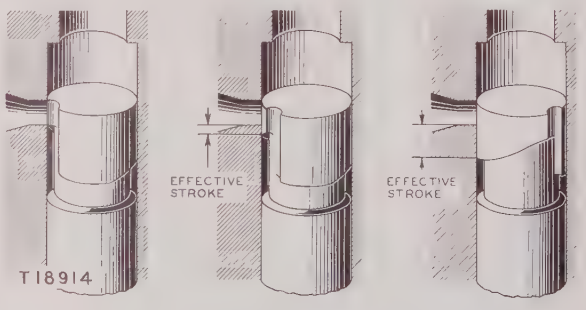

FIG. D
SHUT OFF

FIG. E
IDLING POSITION

FIG. F
FULL LOAD POSITION

In Fig. D the plunger has been rotated into the shut off position. The slot connecting the top of the plunger with the recess is in line with the port, therefore, no fuel can be trapped and injected.

In Fig. E the plunger has been rotated into the idling position. The narrow part of the plunger formed by the helix will cover the port for only a short part of the stroke. This permits only a small amount of fuel to be injected per stroke.

In Fig. F the plunger has been rotated into the full load position. The wide part of the plunger formed by the helix covers the port for a longer part of the stroke. This permits a larger amount of fuel to be injected per stroke.

Worn fuel injection pumps will result in loss of power and hard starting. These same conditions may be present if the piston rings and cylinder liners are badly worn. However, in the case of worn piston rings and liners, the hard starting and loss of power will be accompanied by poor compression, a smoky exhaust and excessive blow-by gases from the crankcase breather.

Ordinarily, if one fuel injection pump on an engine is worn, it will be found that all of the injection pumps are worn and need replacing.

Failure to replace all of the worn injection pumps may result in erratic and irregular engine operation.

FUEL INJECTION PUMP HOUSING

Removal and Installation (Earlier Engines)

1. Drain the diesel engine cooling system.

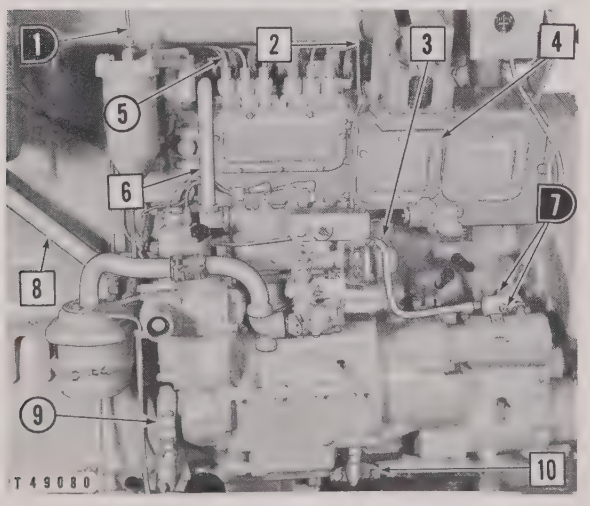

PREPARING TO REMOVE FUEL INJECTION PUMP HOUSING

☐ Remove ◗ Disconnect

1–Fuel gauge line. 2–Fuel line. 3–Elbow. 4–Cover. 5–Fuel injection lines (six). 6–Water line. 7–Electrical leads. 8–Tube. 9–Front support. 10–Rear support.

2. Remove the fuel injection lines **(5)** and cover all openings to prevent the entry of dirt into the fuel system.
3. Loosen the clamp screw on the collar of the starting engine front support **(9)** and move the upper portion of the starting engine away from the diesel engine cylinder block to provide enough clearance to remove the fuel injection pump housing. Tighten the clamp screw.
4. Remove the starting engine right rear head bolt.
5. Remove the bolts which secure the drain **(13)** and bracket **(16)** to the cylinder block.

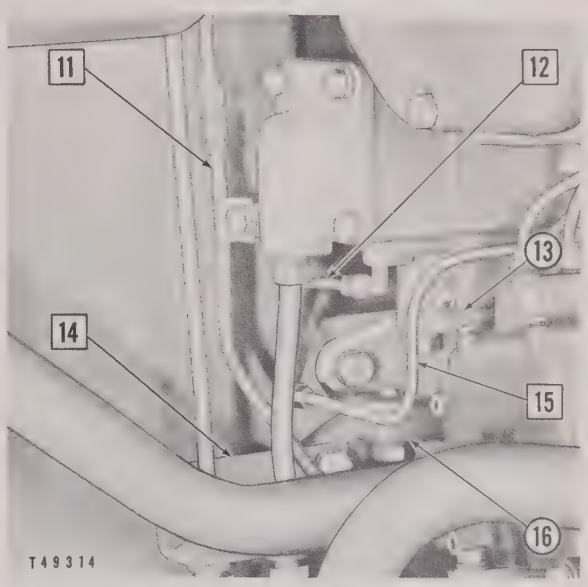

PREPARING TO REMOVE FUEL INJECTION PUMP HOUSING

☐ Remove

11–Fuel line. 12–Tube. 13–Drain. 14–Bracket assembly. 15–Tube. 16–Bracket.

6. Disconnect the fuel pump rack bar from the governor.

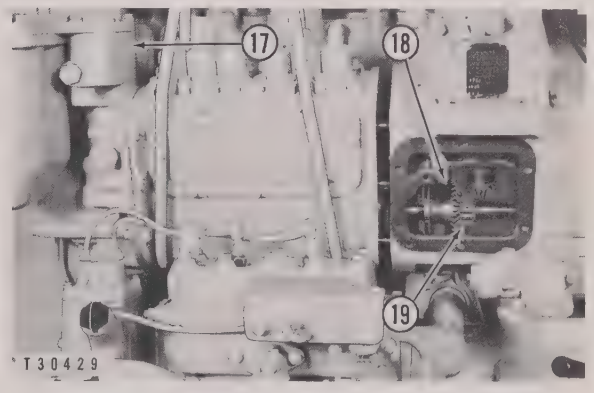

REMOVING FUEL INJECTION PUMP HOUSING

17–Adapter housing. 18–Drive gear. 19–Splined shaft.

7. Remove the nuts from the studs that secure the fuel pump housing to the drive housing and attach a suitable hoist and sling to the fuel injection pump housing.
8. Move the fuel pump housing away from the drive housing until the drive gear **(18)** is free from the splined shaft **(19)**.
9. Remove the fuel filter, transfer pump and adapter housing **(17)** as a unit from the fuel injection pump housing.

10. Install in the reverse order of removal, using new gaskets where necessary.
11. Time the fuel injection pump as explained in the topic, TIMING THE FUEL INJECTION PUMP CAMSHAFT.

Removal and Installation (Later Engines)

1. Drain the diesel engine cooling system.
2. Remove the fuel injection lines **(2)** and cover all openings to prevent the entry of dirt into the fuel system.

PREPARING TO REMOVE FUEL INJECTION PUMP HOUSING

☐ **Remove** ◗ **Disconnect**

1–Water line. 2–Fuel injection lines (six). 3–Water line. 4–Drain tube. 5–Bolts (two). 6–Bracket assembly. 7–Bolt.

NOTE

If the engine is equipped with a gasoline starting engine, remove all water lines that connect the starting engine with the diesel engine and the exhaust pipe between the starting engine and cylinder head. Remove the starting engine rear support and tilt the starting engine away from the diesel engine as described in step 3 under Removal and Installation (Earlier Engines).

3. Disconnect the fuel pump rack bar from the governor.
4. Remove the nuts from the studs that secure the fuel pump housing to the drive housing and attach a suitable hoist and sling to the fuel injection pump housing.
5. Move the fuel pump housing away from the drive housing until the drive gear **(9)** is free from the splined shaft **(10)**.

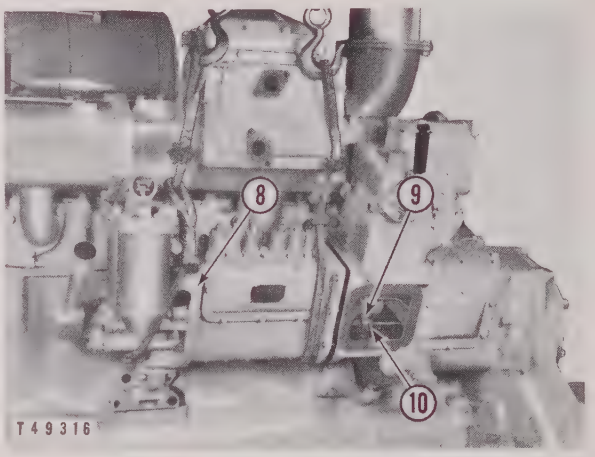

REMOVING FUEL INJECTION PUMP HOUSING
8–Adapter housing. 9–Drive gear. 10–Splined shaft.

6. Remove the fuel filter, transfer pump and adapter housing **(8)** as a unit from the fuel injection pump housing.
7. Install in the reverse order of removal, using new gaskets where necessary.
8. Time the fuel injection pump as explained in the topic, TIMING THE FUEL INJECTION PUMP CAMSHAFT.

Disassembling and Assembling Pump Housing

1. Remove the inspection covers **(3)** and **(4)**.
2. Remove the fuel injection pumps **(1)**.
3. Remove the rack assembly **(2)**.
4. Loosen the locknuts **(B)** and remove the lifter yokes **(A)**.
5. Install the bolts **(C)** and the washers **(D)** into the threaded end **(E)** of the lifters. The 6F7031 Bolts and 4F3714 Washers are suitable for this use.

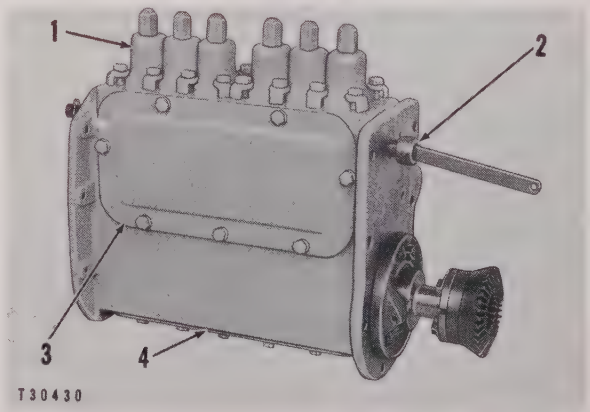

PREPARING TO DISASSEMBLE PUMP HOUSING
1–Fuel injection pump. 2–Rack assembly. 3–Cover. 4–Cover.

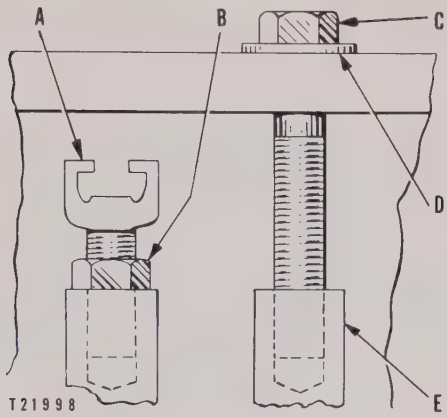

REMOVING LIFTER YOKES AND RAISING LIFTERS
A–Lifter yoke. B–Locknut. C–Bolt. D–Washer. E–Threaded end of lifter.

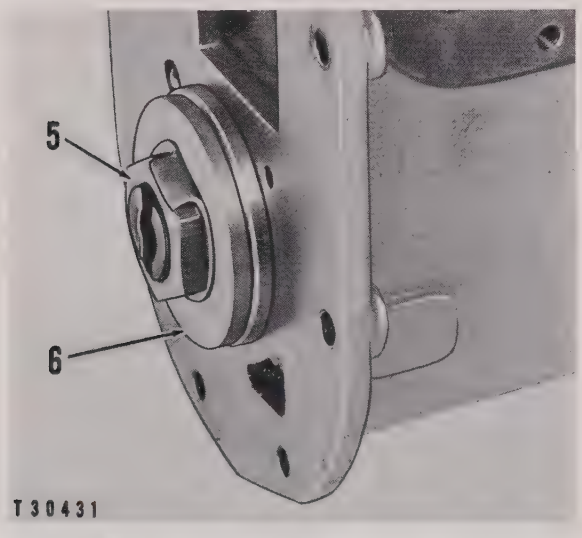

PREPARING TO REMOVE CAMSHAFT
5–Nut. 6–Washer.

6. Thread the bolts into the lifters enough to raise the lifters free from the camshaft.

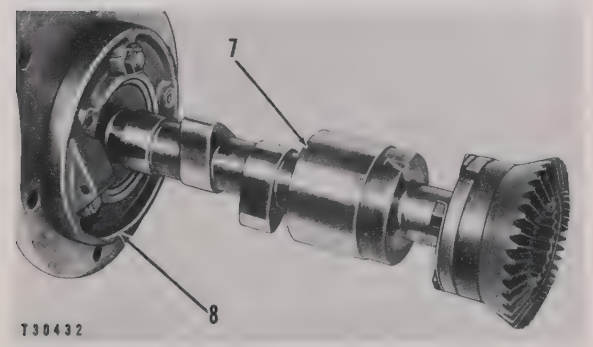

CAMSHAFT PARTIALLY REMOVED
7–Camshaft. 8–Fuel pump housing pilot.

7. Bend the lock and remove the nut **(5)** and the washer **(6)**.
8. Remove the camshaft **(7)** as illustrated.
9. Bend the locks and remove the bolts that secure the fuel pump housing pilot **(8)** to the pump housing.
10. Pull the fuel pump housing pilot and the bearing as a unit from the pump housing, using the 8B7554 Bearing Cup Pulling Attachment and the 8B7548 Push Puller. The two remaining bearings **(12** and **(13)** can be removed in a similar manner.
11. Remove the bolts **(C)** and washers **(D)** and remove the lifters **(9)** and lifter springs **(10)**.

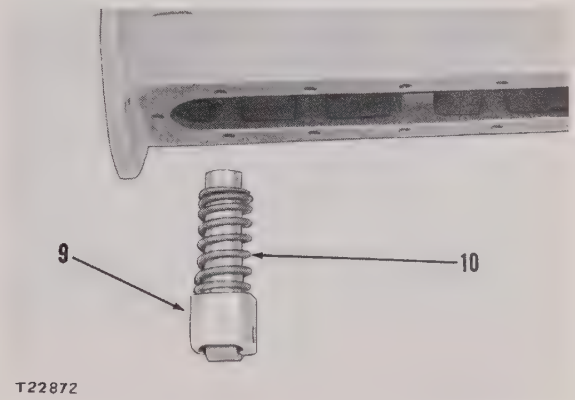

LIFTER AND SPRING REMOVED
9–Lifter. 10–Spring.

12. Inspect all parts for wear and replace them if necessary.

NOTE

The ID of new bearings **(12)**, **(13)** and **(14)** and the diameter of the journals on a new camshaft are listed under the topic, SPECIFICATIONS.

13. Align the hole in the bearing **(12)** with the oil passage in the housing and press the bearing into the bore of the housing until the flange on the bearing is against the machined surface on the end of the pump housing.
14. Align the hole in the bearing **(13)** with the oil passage in the housing and press the bearing into the bore of the housing until it is 6 7/64″ from the machined surface **(11)**.
15. Align the hole in the bearing **(14)** with the oil passage in the housing and press the bearing into the bore of the housing until 7/16″ of the bearing remains beyond flush of the machined surface **(11)** as shown.
16. The bearing **(15)** can be replaced if necessary. The ID of a new bearing is listed in the topic, SPECIFICATIONS.

17. Assemble the remaining parts in the reverse order of disassembly.

18. Tighten the nut **(5)** on the end of the camshaft to the torque value given in the topic, SPECIFICATIONS. After tightening the nut on the end of the camshaft, the width of the slot in the camshaft should be .381″ - .376″. This will allow enough clearance for the tang on the fuel transfer pump shaft to enter the slot and at the same time prevent too much free play.

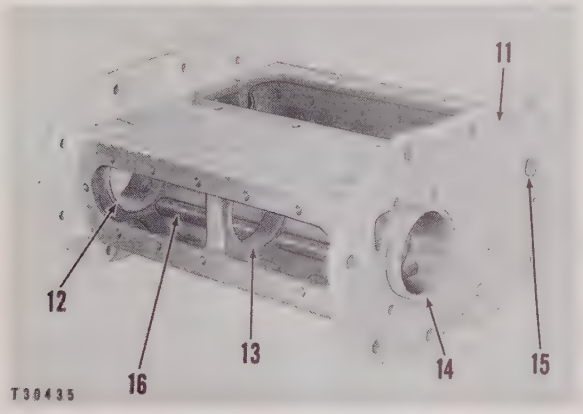

INSTALLATION OF CAMSHAFT AND RACK BEARINGS
11–Machined face. 12–Bearing. 13–Bearing. 14–Bearing. 15–Bearing. 16–Oil manifold.

19. After installing the fuel pump assembly on the engine and timing the pump camshaft, adjust the lifter settings. See the topic, FUEL PUMP LIFTER SETTINGS (ON ENGINE).

NOTE

The oil distribution manifold **(16)** is a press fit in the fuel injection pump housing. In the event the manifold has been removed from the housing, make certain that the cross drilled holes in the injection pump camshaft housing line up with the drilled holes in the manifold. This will also make certain that the spray holes in the manifold are properly positioned under the lifter rollers. A spring loaded ball check valve in the end of the manifold acts as a pressure relief valve for this oiling system. It has no adjustments.

FUEL PUMP LIFTER SETTINGS (ON ENGINE)

If the injection pump lifters have been removed, or disturbed from their original settings, it is necessary to reset them.

Periodically the lifter settings should be checked and reset, if necessary, to account for worn pump lifters or wear on the bottom of the pump plungers. See the topic, FUEL INJECTION PUMP LIFTER YOKE AND PUMP PLUNGER INSPECTION.

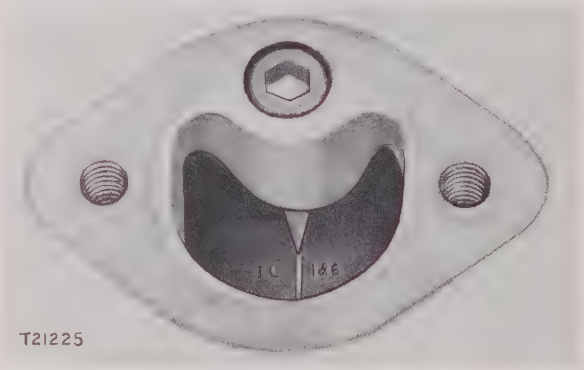

LOCATING TOP CENTER FLYWHEEL MARK

NOTE

The maximum quantity of fuel that can be injected by each pump into the cylinder, and accordingly, the maximum horsepower output of the engine at a given operating speed is determined by the fuel rack setting. This rack setting should be changed only in accordance with information furnished Caterpillar dealers. See the topic, GOVERNOR ADJUSTMENTS.

The lifter settings can be set in the following manner:

1. Turn the crankshaft in the direction of the engine rotation to top center (TC) on the compression stroke of the cylinder for which lifter is to be set.

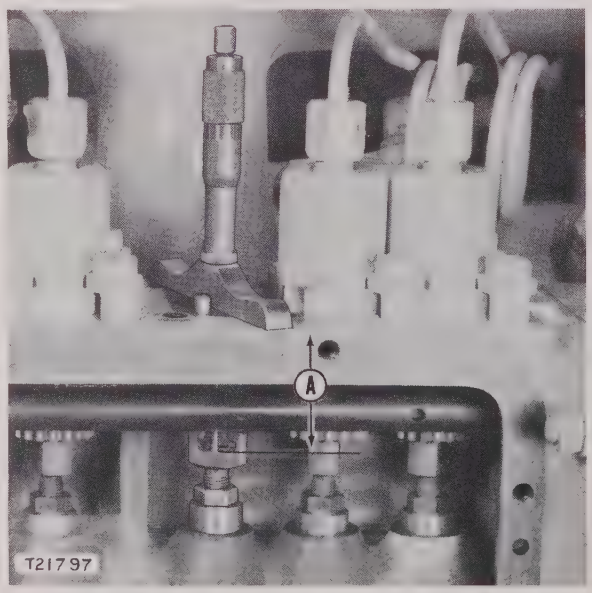

MEASURING LIFTER SETTING
A–Distance to be measured.

2. If the top center mark on the flywheel is turned past the pointer, turn the flywheel backward approximately 60°. Then turn the crankshaft again in the direction of crankshaft rotation until the top center mark aligns with the pointer.

3. Check the pump lifter at this crankshaft position (top center of the cylinder for which the lifter is being set).

4. Using the 6F6922 Micrometer Depth Gauge check the distance **(A)** and reset if necessary, using the 5H9977 Wrench **(2)** and the 6H3051 Wrench **(1)**. See the topic, SPECIFICATIONS, for correct lifter setting.

NOTE

It is important when checking and setting the lifters that the crankshaft be turned in the direction of engine rotation. After a lifter has been checked or set according to specifications, turn the crankshaft a few degrees in the direction of engine rotation. Again measure the distance **(A)**. This distance should be less than the measurement when checked with the crankshaft at top center thus indicating the lifter is rising and was checked at the correct position.

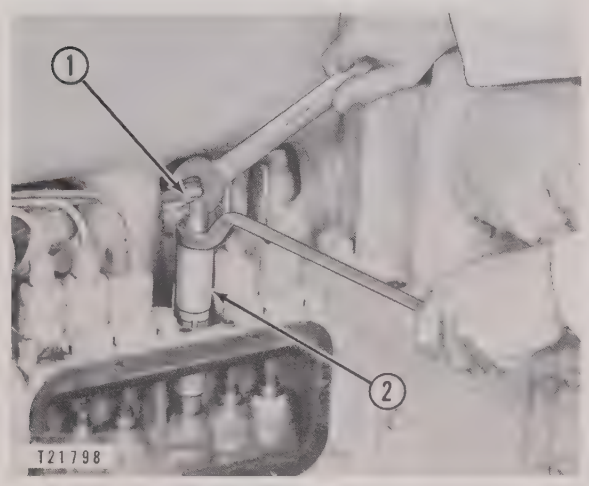

PUMP LIFTER SETTING TOOLS
1–6H3051 Wrench. 2–5H9977 Wrench.

5. If all the lifters are to be checked or reset, continue the procedure in the normal firing order of the engine.

FUEL PUMP LIFTER SETTINGS (OFF ENGINES)

The following procedure for checking the lifters with the pump housing off the engine will result in correct fuel injection timing, the same as when adjusted on the engine. The adjustable coupling on this engine compensates for any wear present in the timing gears. However, after installing and timing the injection pump camshaft as explained in the topic, TIMING FUEL INJECTION PUMP CAMSHAFT, it is advisable to recheck one of the lifter settings, using the setting for dimension **(A) on** the engine. This assures that all lifters are properly set, as well as timed to the engine.

The tools shown are all the tools necessary for adjusting the lifters off the engine.

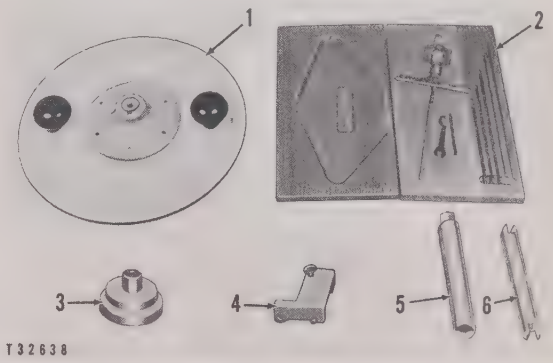

TOOLS REQUIRED FOR ADJUSTING LIFTERS OFF ENGINE
1–1F8747 Timing Plate. 2–6F6922 Micrometer Depth Gauge. 3–9H3978 Shaft Assembly. 4–9H3976 Pointer Assembly. 5–5H9977 Lifter Adjustment Wrench. 6–6H3051 Lifter Adjustment Wrench.

The drive shaft in the center of early 1F8747 Plate Assemblies must be replaced with a 9H3978 Shaft Assembly **(3)**. This shaft has a key which will mesh with the slot on the fuel injection pump camshaft. It can be installed in only one position.

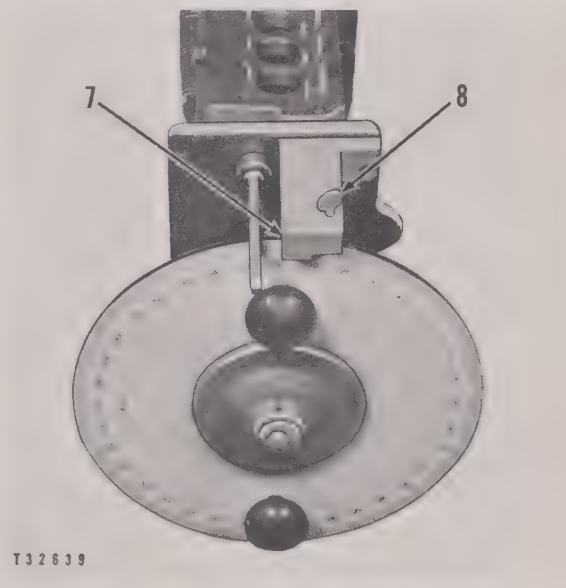

FUEL PUMP LIFTER SETTING OFF ENGINE
7–Edge of boss. 8–Lockscrew.

1. Place the timing plate **(1)** on the drive end of the camshaft and align the coupling with the camshaft. Use a bolt and washer as shown to secure the plate and coupling to the camshaft. This allows the camshaft to be rotated by rotating the timing gear.

2. Place the pointer assembly dowel in the dowel hole and bolt the pointer assembly **(4)** to the end of the housing.

3. Refer to the table in the topic, SPECIFICATIONS, and select the timing plate setting for the lifter being checked or set. Set the timing plate to this setting by rotating it clockwise until the proper degree setting lines up with the edge of the boss **(7)** on the pointer assembly **(4)**. Lock in position with the lockscrew **(8)**.

NOTE

No. 1 lifter is on the opposite end of the housing from the timing plate.

4. Using a depth gauge, check the distance **(A)** from the lifter being set, and adjust if necessary, using the lifter adjustment wrenches **(5)** and **(6)**. Distance **(A)** is illustrated in the previous topic, and its actual dimension is listed in the topic, SPECIFICATIONS.

5. If all the lifters are to be checked or reset, continue the same procedure in the firing order of the engine. Recheck each lifter setting after the adjustment has been made and the locknut tightened to make sure the setting has not changed.

FUEL PUMP LIFTER YOKE AND PUMP PLUNGER INSPECTION

Adjusting the fuel pump lifters is necessary whenever they have been removed from the housing. The adjustment should also be checked periodically to compensate for wear in the timing gears, lifters or the ends of the pump plungers to assure that the point of the fuel injection is correct. If the lifter is too high, injection will begin early, and, if too low, injection will be late.

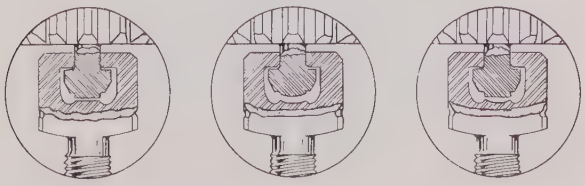

WEAR BETWEEN YOKE AND PLUNGER

When pump plunger wear becomes excessive, the lifter yoke may also be worn in such a manner that it will not make full contact with the end of a new plunger. To avoid rapid wear on the end of the new plunger, lifter yokes showing visible wear should always be replaced.

Fig. A illustrates the contact surfaces of a new pump plunger and a new lifter yoke. In Fig. B, the pump plunger and lifter yoke have worn considerably. Fig. C shows how the flat end of a new plunger makes poor contact with a worn lifter yoke, resulting in rapid wear to both parts.

A pump can maintain a satisfactory discharge rate and yet be unserviceable because of delayed timing resulting from wear on the lower end of the plunger. When testing a pump which has been in use for a long time, the length of the plunger should be checked and the pump discarded if the plunger wear exceeds .005". See the topic, SPECIFICATIONS, for the length of new plungers. The length should be checked with a micrometer as shown.

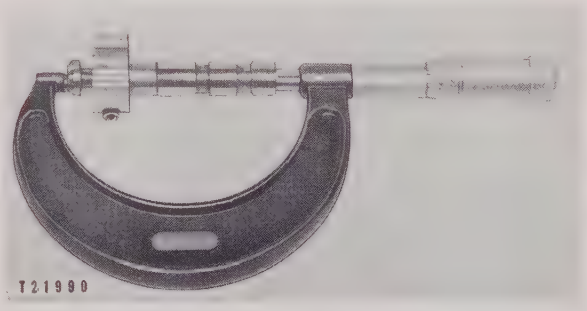

CHECKING LENGTH OF PLUNGER

TIMING THE FUEL INJECTION PUMP CAMSHAFT

All timing of the engine is accomplished with number one piston at the top center (TC) of the compression stroke.

1. Remove the covers from the side of the fuel pump and governor drive housing.

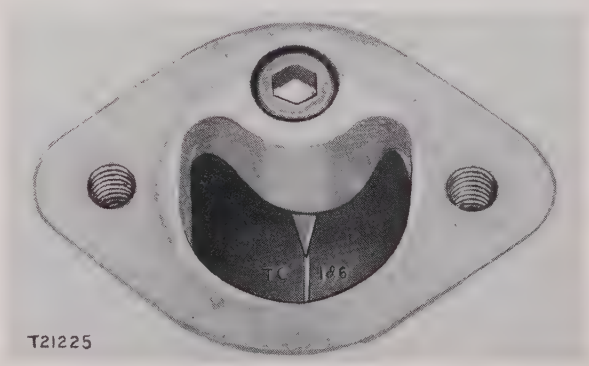

LOCATING TOP CENTER FLYWHEEL MARK

2. Remove the cover over the flywheel pointer and remove the cover which gives access to the camshaft gear through an opening in the timing gear cover.

NOTE

It is not necessary to check the camshaft gear. It will be in alignment when No. 1 piston is at TC, compression stroke, if the engine has been assembled correctly. However, if the gear is readily accessible, it affords a double check on the timing.

3. Rotate the diesel engine crankshaft in the direction of engine rotation until the number one piston is at top center (TC) on the compression stroke and the V-mark **(1)** is in alignment with the timing hole **(2)**.

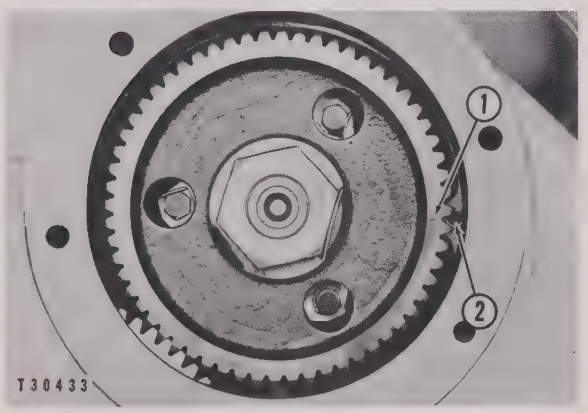

TIMING MARK ON CAMSHAFT GEAR
1–V-mark. 2–Timing hole.

NOTE

If the top center mark on the flywheel is turned past the pointer, turn the flywheel backward approximately 60°. Then turn the crankshaft again in the direction of crankshaft rotation until the top center mark aligns with the pointer.

4. Loosen the bolts **(A)**.
5. Remove the dowel **(6)** from the drilled hole **(4)** and insert it into the drilled passage as shown.
6. Rotate the fuel injection pump camshaft until the dowel **(6)** can be inserted into the slot **(3)** in the camshaft flange. The camshaft can be rotated by inserting a small punch in one of the holes **(B)**.
7. Tighten the clamp bolts **(A)** that secure the coupling drive shaft **(5)** to the accessory drive shaft assembly to the torque given in the topic, SPECIFICATIONS, and bend the locks that hold the bolts **(A)** in place. The fuel injection pump camshaft is now in time with the engine.
8. Remove the dowel **(6)** and insert it into the drilled hole **(4)**.

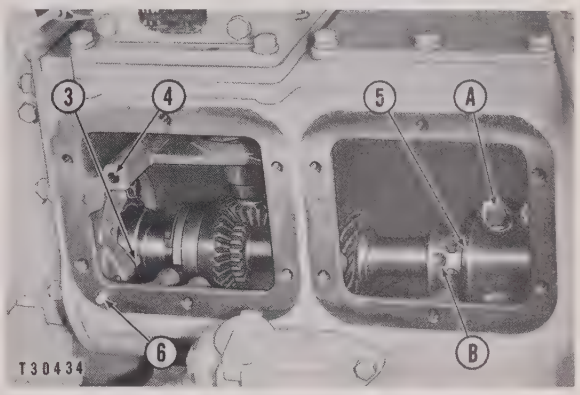

TIMING THE FUEL INJECTION PUMP CAMSHAFT
A–Bolt. B–Hole. 3–Slot in camshaft. 4–Drilled hole. 5–Coupling shaft. 6–Dowel.

9. Replace the covers over the flywheel pointer and the side of the fuel injection pump and governor drive housing and the camshaft gear.

Ignition System
(Natural Gas Engines)

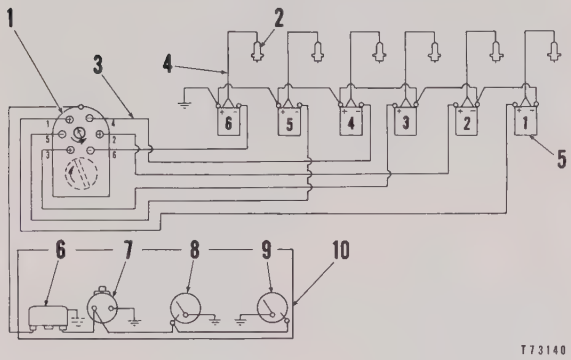

IGNITION SYSTEM
1–Magneto. 2–Spark plugs. 3–Low tension leads. 4–High tension leads. 5–Transformers. 6–Magnetic switch. 7–Manual stop switch. 8–Oil pressure gauge. 9–Water temperature gauge. 10–Instrument panel.

The ignition system consists of a low tension magneto **(1)**, ignition transformers **(5)**, low and high tension leads **(3)** and **(4)**, spark plugs **(2)** and a magnetic shutoff switch **(6)**.

Magneto **(1)** generates primary voltage and delivers it through low tension leads **(3)** to ignition transformers **(5)**. The transformers boost the voltage induced by the magneto and deliver this electrical surge through high tension leads **(4)** to spark plugs **(2)**. The spark ignites air/fuel mixture in the cylinder.

The ground terminal on the magneto is connected to magnetic switch **(6)** on instrument panel **(10)**. Manual stop switch **(7)** and stationary contacts in oil pressure gauge **(8)** and water temperature gauge **(9)** are also connected to magnetic switch **(6)**.

In the event of high water temperature or low oil pressure, the gauge pointer touches the stationary contacts to ground the magnetic switch and magneto, thereby stopping the engine.

MAGNETO (American Bosch)

Removal and Installation

Place identification marks on all leads and disconnect them from magneto.

Inspect all parts.

Install magneto on engine. See topic, TIMING MAGNETO TO ENGINE.

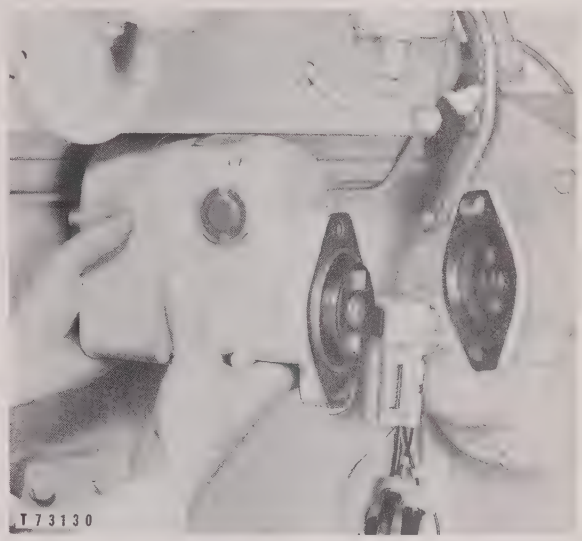

REMOVING MAGNETO

Disassembly and Assembly

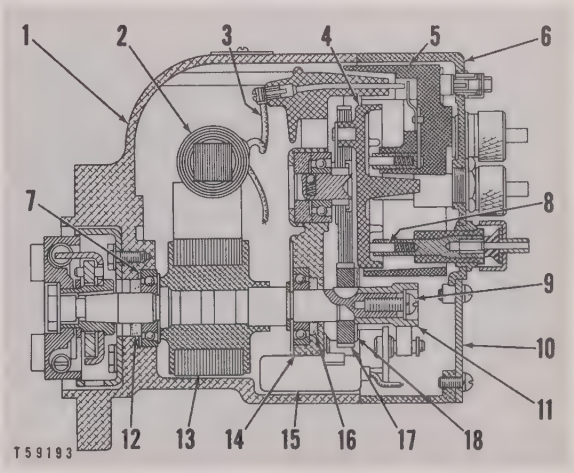

MAGNETO CROSS SECTION
1–Housing. 2–Coil assembly. 3–Wire. 4–Distributor gear and rotor assembly. 5–Insulation ring. 6–Cover assembly. 7–Bearing. 8–Brushes. 9–Screw and washer. 10–End cap. 11–Cam. 12–Washer. 13–Rotor shaft assembly. 14–Bracket assembly. 15–Condenser. 16–Washer. 17–Gear and key. 18–Indicating washer.

1. Disconnect ground wire **(24)** and remove cover assembly **(6)**, insulation ring **(5)** and brushes **(8)** as a unit.
2. Remove contact points. See topic, CONTACT POINT REMOVAL AND INSTALLATION.
3. Remove cam **(11)**.

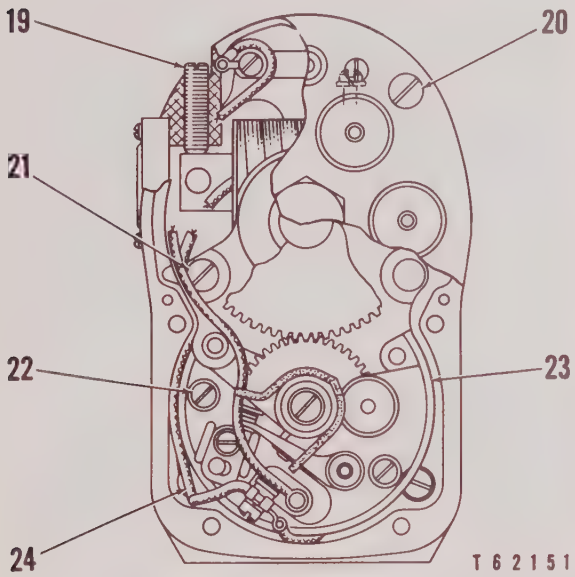

MAGNETO CROSS SECTION
19, 20, 21, and 22–Screw. 23–Plate assembly.
24–Ground wire.

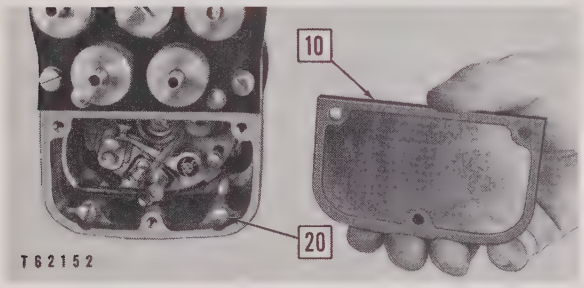

DISASSEMBLING MAGNETO

☐ Remove

10–End cap. 20–Screw (six).

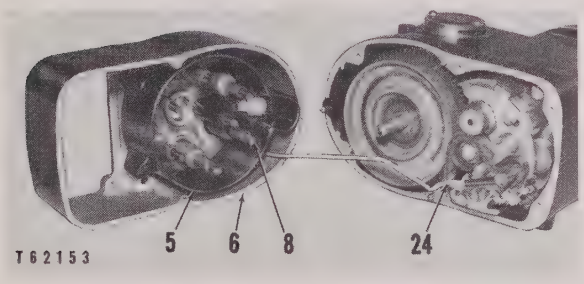

REMOVING COVER ASSEMBLY
5–Insulation ring. 6–Cover assembly. 8–Brushes.
24–Ground wire.

NOTE

Cam **(11)** has two slots **(E)**, one marked with letter "A" (anti-clockwise) and the other with letter "C" (clockwise). During assembly, engage

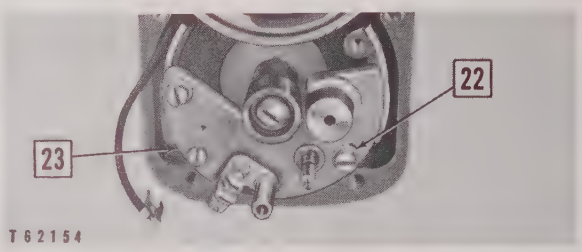

REMOVING PLATE ASSEMBLY

☐ Remove

22–Screws (two). 23–Plate assembly.

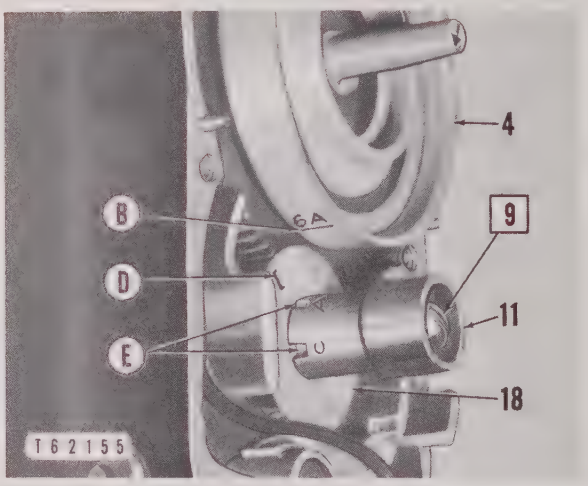

REMOVING CAM

☐ Remove

4–Distributor gear and rotor assembly. 9–Screw and washer. 11–Cam. 18–Indicating washer. B–Mark on distributor gear and rotor assembly. D–Mark on indicating washer. E–Slots in cam.

the cam slot (marked with letter denoting rotation of magneto) with key on end of rotor shaft.

4. Remove distributor gear and rotor assembly **(4)** and indicating washer **(18)**.

NOTE

Distributor gear and rotor assembly **(4)** and indicating washer **(18)** must be removed simultaneously. During assembly, key slot in center of indicating washer **(18)** must engage key on rotor shaft. Slot **(D)** in outer rim of indicating washer must line up with one of the marks **(B)** on the distributor gear and rotor assembly. Distributor gear and rotor assembly **(4)** is marked "A" (anti-clockwise) and "C" (clockwise) and is aligned in accordance with direction of magneto rotation. For direction of magneto rotation, see topic, SPECIFICATIONS.

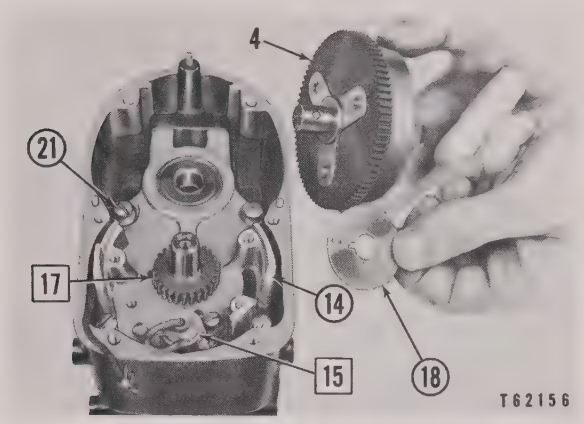

PREPARING TO REMOVE BRACKET ASSEMBLY

☐ Remove

4–Distributor gear and rotor assembly. 14–Bracket assembly. 15–Condenser. 17–Gear and key. 18–Indicating washer. 21–Screws (four).

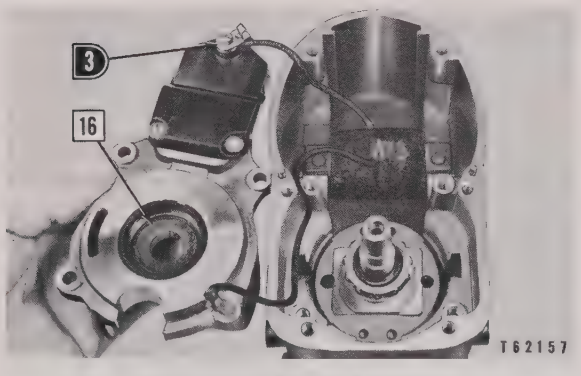

REMOVING BRACKET ASSEMBLY

☐ Remove ◗ Disconnect

3–Wire. 16–Washer.

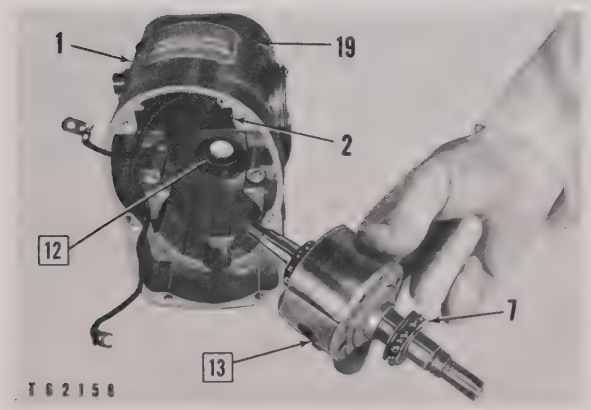

REMOVING ROTOR SHAFT

☐ Remove

1–Housing assembly. 2–Coil assembly. 7–Bearings. 12–Washer. 13–Rotor shaft assembly. 19–Screws (two).

5. Remove screws **(21)** and separate bracket assembly **(14)** from housing.
6. Remove impulse coupling.
7. Loosen screws **(19)**, remove coil assembly **(2)**.

NOTE

During assembly, coat lower halves of screws **(19)** with white lead and upper protruding portion with air-drying black enamel. Tips of screws **(19)** are piloted into ends of the coil assembly for proper positioning.

8. Bearings **(7)** can be pressed from rotor shaft.
9. Bearing outer races can be pressed from housing **(1)** and bracket assembly **(14)**. When installing, an insulation strip must be placed between each outer race and the wall of bearing seat. Any excess material can be removed with a sharp instrument after race has been seated properly.
10. Inspect all parts. See topic, MAGNETO CLEANING AND INSPECTION.
11. Assemble in reverse order of disassembly.
12. Adjust contact points to proper opening. See topic, ADJUSTING CONTACT POINT OPENING.
13. Set magneto edge gap.

Impulse Coupling

The impulse coupling is installed on the rear of the magneto. It provides the means for retarding spark automatically during starting period and intensifies the spark at low rotative speeds.

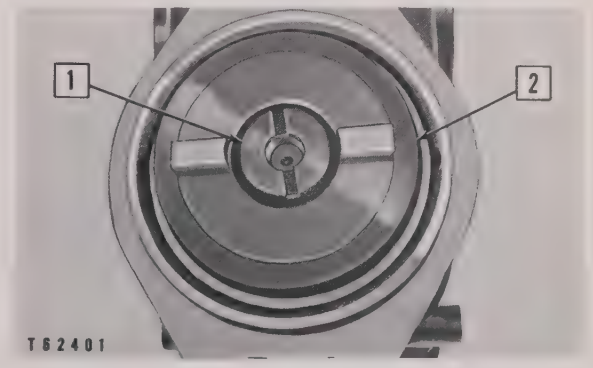

PREPARING TO DISASSEMBLE IMPULSE COUPLING

☐ Remove

1–Nut. 2–Housing assembly.

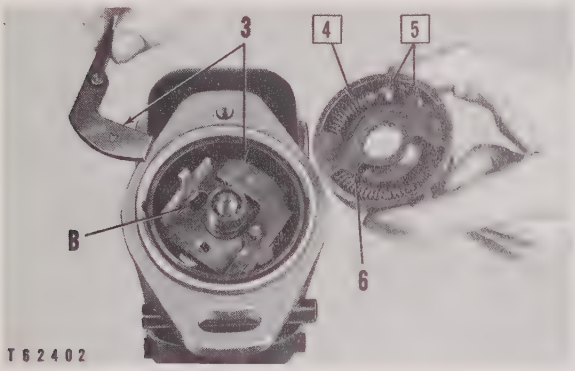

DISASSEMBLING IMPULSE COUPLING
(Anti-clockwise rotation magneto shown)

☐ **Remove**

3–Weights. 4–Spring. 5–Balls. 6–Cam. B–Slot.

1. Remove weights **(3)** from slots **(B)** and cam **(6)** from housing assembly.

NOTE

Cam **(6)** and weights **(3)** have letter "A" (anti-clockwise) marked on one side and letter "C" (clockwise) marked on other side. Cam **(6)** and weights **(3)** must be assembled with appropriate letter visible, as shown, denoting direction of magneto rotation. For direction of magneto rotation, see topic, SPECIFICATIONS.

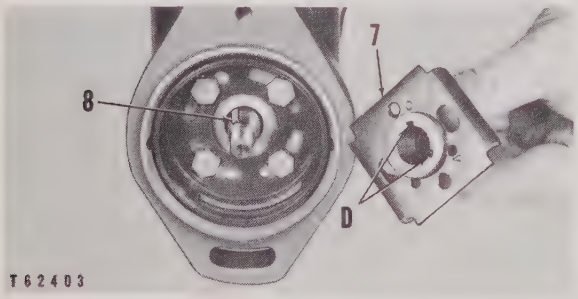

REMOVING HUB
7–Hub. 8–Key. D–Keyslots.

2. Remove hub **(7)** and key **(8)** from shaft.

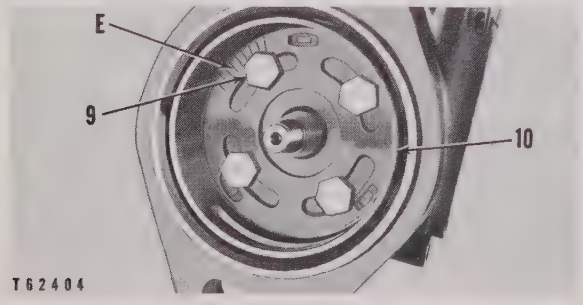

REMOVING PLATE
(40° Lag angle impulse coupling shown)
9–Bolts. 10–Plate. E–Calibrations.

NOTE

Keyslots **(D)** are marked "A" (anti-clockwise) and "C" (clockwise). During assembly, keyslot with the letter denoting direction of magneto rotation must be aligned with key **(8)**. For direction of magneto rotation, see topic, SPECIFICATIONS.

3. Plate **(10)** can be removed, if necessary, by removing bolts **(9)**.

NOTE

Plate **(10)** has calibrations **(E)** at 5° intervals from 0° to 50° for setting lag angle. Before removing plate **(10)** or bolts **(9)**, this setting should be noted to insure proper assembly.

4. Inspect all parts.
5. Assemble in reverse order of disassembly.
6. Tighten nut **(1)** to the torque value listed in the topic, SPECIFICATIONS.

Magneto Cleaning and Inspection

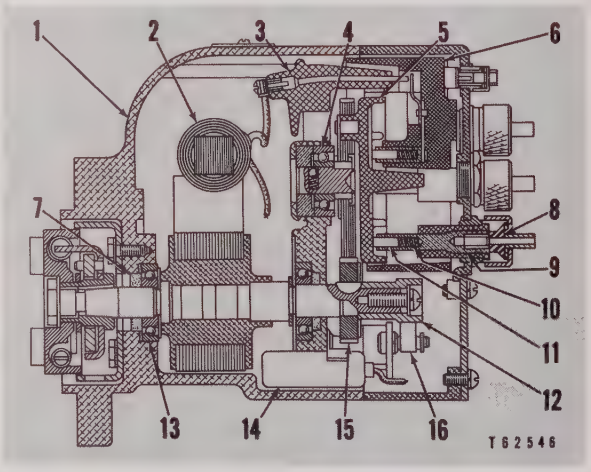

MAGNETO CROSS SECTION
1–Housing. 2–Coil assembly. 3–Low tension conductor. 4–Bearing. 5–Distributor gear and rotor assembly. 6–Insulation ring. 7–Washer. 8–Insulation bushing. 9–Low tension conductor terminal. 10–Spring. 11–Brush. 12–Cam. 13–Bearing. 14–Condenser. 15–Magnet rotor gear. 16–Lever assembly.

All metal parts except distributor gear shaft bearing **(4)** should be cleaned in mineral spirits and dried thoroughly. Bearing **(4)** and all insulated parts such as distributor gear and rotor assembly **(5)**, conductor terminals **(9)**, low tension conductor **(3)**, etc., should be wiped with a clean dry cloth.

VISUAL INSPECTION

Part	Inspect For
Washer **(7)**	Worn or frayed condition — Lubrication.
Ball bearing **(4)**	Wear-roughness. Do not re-lubricate.
Ball bearings **(13)**	Wear-roughness and lubrication.
Ground cable	Loose terminal connection, frayed or worn insulation.
Distributor gear and rotor assembly **(5)**	Wear, cracks, brush tracks, worn or damaged teeth, loose rotor, and lubrication.
Insulation ring **(6)**	Cracks, corroded brass insert, corrosion on and security of contact spring, and cleanliness.
Brush **(11)** and spring **(10)**	Worn brush, damaged spring, cleanliness.
Contact points	Mounds, craters, cleanliness. If necessary, dress with a suitable stone. Do not use sandpaper or a file.
Lever assembly **(16)**	Wear, freedom of movement, and tension of spring. (Contact pressure 16 to 20 ounces).
Breaker lever insulation bushing	Cracks or damage.
Cam wick	Worn, frayed or hardened condition. Do not relubricate, replace if necessary.
Cam **(12)**	Wear.
Condenser **(14)**	Loose cable connections.
Coil assembly **(2)**	Loose wrapping, cleanliness. If wrapping is loose, brush only with air drying insulating varnish requiring an alcohol thinner.
Housing **(1)**	Cleanliness.
Housing ventilators	Cleanliness.
Cables	Frayed or cracked insulation.
Magnet rotor gear **(15)**	Burrs, worn teeth.
Low tension conductor **(3)**	Cracks, damage, cleanliness.
Low tension conductor terminal **(9)**	Cracks, cleanliness.
Insulation bushing **(8)**	Cracks, damage.

ELECTRICAL INSPECTION

Part	Test For
Coil assembly **(2)**	Continuity
Breaker plate assembly	Leakage between the insulated terminal bracket and breaker plate.
Cables	Continuity.
Insulation ring **(6)**	Leakage with a high-voltage spark.
Condenser **(14)**	Leakage, open or short circuit.
Distributor gear and rotor assembly **(5)**	Leakage or short circuit between electrode and shaft with a high-voltage spark.
Low tension conductor **(3)**	Leakage with a high-voltage spark.
Low tension conductor terminal **(9)**	Leakage with a high-voltage spark.

Contact Point Removal and Installation

1. Loosen screw **(4)**.

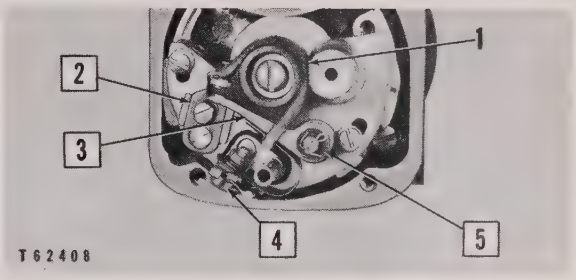

REMOVING CONTACT POINTS

☐ **Remove**

1–Cam wick. 2–Bracket. 3–Lever assembly. 4–Screw. 5–Pin and washer.

2. Cam wick **(1)** can be removed from lever assembly **(3)** after lever assembly has been removed.
3. Inspect cam wick **(1)**. See topic, MAGNETO CLEANING AND INSPECTION.

NOTE

Do not lubricate cam wick. Replace it when necessary. Be sure to remove any lubricant which may reach contact points during cam wick replacement. This is important as one of points is passed through wick when assembling it to breaker lever.

4. Inspect contact points. See topic, MAGNETO CLEANING AND INSPECTION.
5. Install in reverse order of removal.
6. Adjust contact points to proper setting. See topic, ADJUSTING CONTACT POINT OPENING.

Adjusting Contact Point Opening

1. Remove magneto end plate. Rotate magneto until contact point bumper block is on one of highest elevations of cam.
2. Loosen screw **(1)** which holds adjustable contact point bracket.

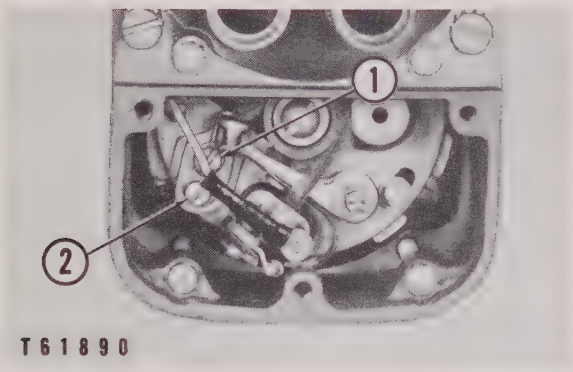

ADJUSTING CONTACT POINTS
1–Screw. 2–Slotted-head eccentric screw.

3. Insert a screwdriver in slotted-head eccentric screw **(2)** and turn until correct point opening is obtained. See topic, SPECIFICATIONS.
4. Tighten screw **(1)** and recheck adjustment.
5. Install magneto end plate.

Magneto Edge Gap

Maximum ignition discharge is obtained by interrupting the primary circuit at the instant the primary circuit reaches its maximum value. This point is reached when the rotor pole shoe is .100" past the housing field. At this point, the contact points should just be beginning to open.

Adjustment:

1. Check contact point adjustment.

NOTE

Edge gap adjustment is independent of contact point adjustment; however, contact points must be set properly prior to edge gap adjustment.

2. Remove adjusting hole screw in bottom of magneto and insert a .100" dia. rod **(A)** in hole as shown. When viewed from driving end, insert rod in left hand hole for anti-clockwise rotation magnetos and in right hand hole for clockwise rotation magnetos.

EDGE GAP ADJUSTMENT OPENINGS
A–.100" dia. rod.

NOTE

The arrow on magneto identification plate (denoting direction of rotation) points to hole to be used.

3. Press rod inward until it contacts rotor shaft.
4. Turn rotor in direction opposite to normal rotation until rod locks tight between rotor pole shoe and housing field.
5. With rotor in this position, loosen support plate adjusting screws **(1)**.

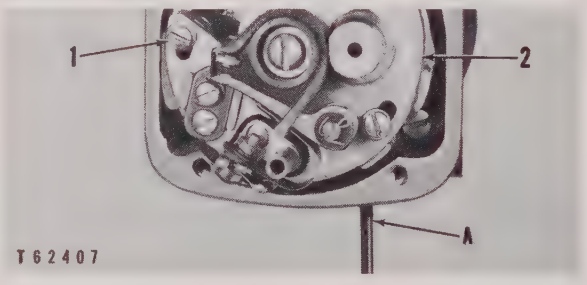

ADJUSTING EDGE GAP
1–Adjusting screws (two). 2–Support plate.
A–.100" dia. rod.

6. Move support plate **(2)** either left or right until contact points just start to open. Tighten support plate adjusting screws **(1)** securely.

NOTE

The point of initial contact point opening can be determined by inserting a thin piece of cellophane between the points, by using a timing light, or by use of a sounding device.

7. Recheck adjustment.
8. Remove rod and replace adjusting hole screw.

Timing Magneto to Engine

1. Remove timing pointer cover from the flywheel housing.
2. Rotate crankshaft in direction of engine rotation until No. 1 piston is coming up on compression stroke.
3. Continue rotating crankshaft until desired timing mark appears directly under flywheel pointer. See topic, SPECIFICATIONS.
4. With magneto off engine, remove end plate to expose breaker points and remove observation hole plug.

NOTE

Magneto point gap should be checked. If it is not within limits of value given in topic, SPECIFICATIONS, it should be adjusted. See topic, ADJUSTING CONTACT POINT OPENING.

5. Rotate coupling until the arrow is in same relative position to No. 1 low tension outlet as shown. Drive tang should be in position shown (as viewed from tower end, through magneto).

NOTE

To avoid engaging impulse weights, rotate coupling so point of arrow, as viewed through observation hole, moves in clockwise direction.

POSITION OF ARROW AND DRIVE TANG

6. With No. 1 piston in proper firing position, magneto drive slot should be in position to mesh with drive tang.

NOTE

If drive slot is not in this position, pull it forward, position it, and engage gear teeth.

7. Install magneto to magneto drive housing, leaving mounting bolts loose. Approximate timing to engine is now obtained.

8. A timing light should be used to obtain exact timing to engine. Mark desired timing marks on flywheel with chalk or white paint to make them more visible under timing light.

9. Connect timing light with the spark plug of No. 1 cylinder.

NOTE

Do not puncture spark plug wire insulation. Use a jumper wire to connect timing light.

10. With engine running, rotate magneto housing on the drive housing to advance or retard the timing.

11. When magneto is properly timed to engine, mark on flywheel will align with pointer as timing light flashes. Tighten mounting bolts securely and recheck timing.

IGNITION TRANSFORMER

Removal and Installation

1. Disconnect wires from terminals **(3)**.

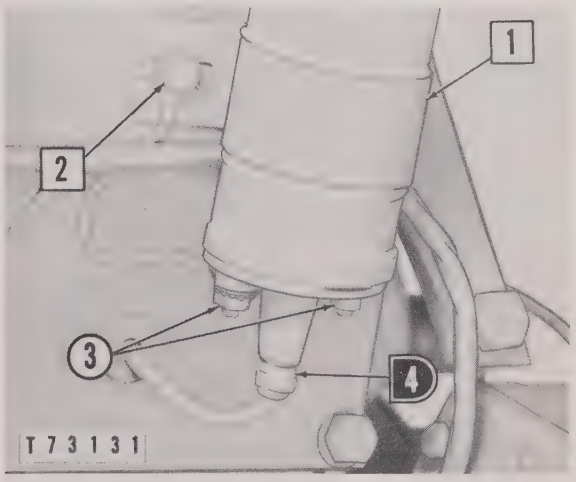

REMOVING IGNITION TRANSFORMERS

☐ Remove ◗ Disconnect

1–Ignition transformer. 2–Bolt (two). 3–Terminals. 4–High tension lead.

NOTE

The remaining transformers are removed in a similar manner.

2. Inspect transformers, connections and terminals for dirt or corrosion and clean as necessary.

3. Measure the resistance of primary and secondary circuits. The value obtained should be compared with that of a transformer that is known to be good. Replace if necessary.

4. Install in reverse order of removal.

NOTE

The negative (−) posts of No's 1, 2, and 3 transformers are grounded, while positive (+) posts of No's 4, 5 and 6 are grounded.

SPARK PLUGS, COVERS AND ADAPTERS

Removal and Installation

Remove cover **(1)** from spark plug **(2)** and adapter **(3)**.

NOTE

Do not peel lip **(A)** from adapter. Grasp cover by handle and pull upward.

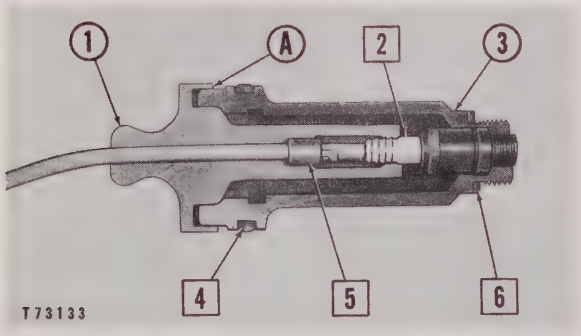

SPARK PLUG, COVER AND ADAPTER
(Cross Section Shown for Better Illustration)
1–Cover. 2–Spark plug. 3–Adapter. 4–Seal. 5–Spacer. 6–Gasket. A–Lip.

Inspect spark plugs for damaged insulation or electrodes and proper gap. See the SPECIFICATIONS.

Coat seal groove of adapter **(3)** and seal **(4)** with liquid soap. Install adapter into cylinder head. Tighten to torque value given in the SPECIFICATIONS.

Ignition System
(Natural Gas Engines)

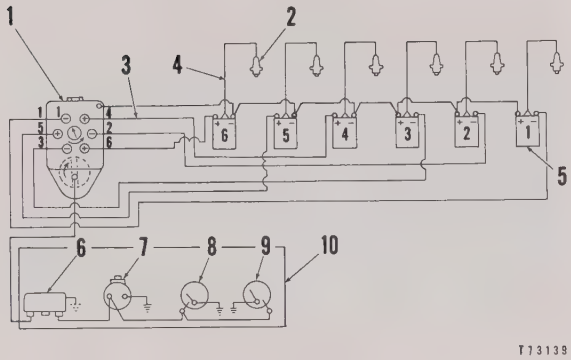

IGNITION SYSTEM
1–Magneto. 2–Spark plugs. 3–Low tension leads. 4–High tension leads. 5–Transformers. 6–Magnetic switch. 7–Manual stop switch. 8–Oil pressure gauge. 9–Water temperature gauge. 10–Instrument panel.

The ignition system consists of a low tension magneto **(1)**, ignition transformers **(5)**, low and high tension leads **(3)** and **(4)**, spark plugs **(2)** and a magnetic shutoff switch **(6)**.

Magneto **(1)** generates primary voltage and delivers it through low tension leads **(3)** to ignition transformers **(5)**. The transformers boost the voltage induced by the magneto and delivers this electrical surge through high tension leads **(4)** to spark plugs **(2)**. The spark plug ignites the air/fuel mixture in the cylinder.

The ground terminal on the magneto is connected to magnetic switch **(6)** on instrument panel **(10)**. Manual stop switch **(7)** and stationary contacts in oil pressure gauge **(8)** and water temperature gauge **(9)** are also connected to magnetic switch **(6)**.

In the event of high water temperature or low oil pressure, the gauge pointer touches the stationary contacts and grounds the magnetic switch and magneto, thereby stopping the engine.

MAGNETO (Fairbanks-Morse)

Removal and Installation

Place identification marks on all leads and disconnect them from magneto.

Inspect for damage.

Install magneto to engine. See topic, TIMING MAGNETO TO ENGINE.

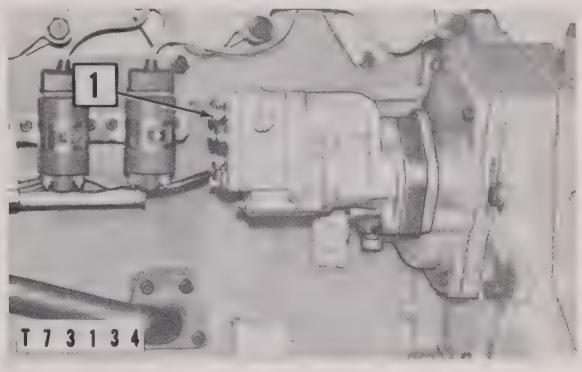

PREPARING TO REMOVE MAGNETO

☐ Remove

1–Magneto.

Disassembly and Assembly

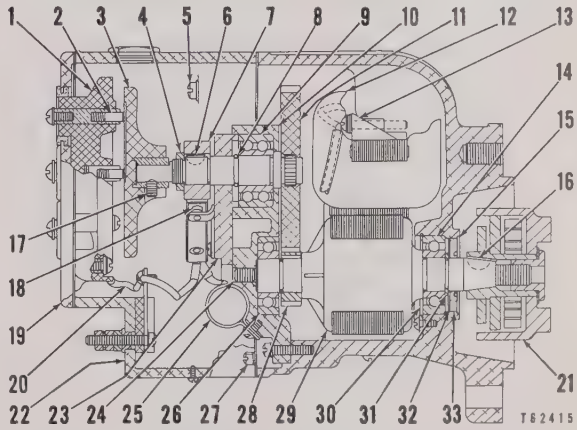

MAGNETO CROSS SECTION
1–Distributor block. 2–Brush and spring assembly. 3–Distributor disc. 4–Nut. 5–Screw. 6–Key. 7–Cam. 8–Lock ring. 9–Bearing. 10–Bearing support. 11–Distributor gear and shaft assembly. 12–Coil. 13–Wedge and screw. 14–Bearing. 15–Outer washer. 16–Key. 17–Setscrew. 18–Contact points. 19–End cap cover. 20–Wire. 21–Impulse coupling. 22–End cap. 23–Support bracket. 24–Setscrew. 25–Condenser. 26–Bearing. 27–Screw. 28–Rotor shaft pinion. 29–Rotor shaft assembly. 30–Washer. 31–Lock ring. 32–Inner washer. 33–Seal.

1. Inspect brush and spring assembly **(2)** in distributor block **(1)**. They should move freely and be under slight spring pressure.
2. Loosen setscrew **(17)** and remove distributor disc **(3)**. Wipe distributor disc with a clean cloth moistened in petroleum solvent.
3. Remove contact points **(18)**.
4. Remove condenser **(25)**. Clean lead wire and cam. Test for open circuit

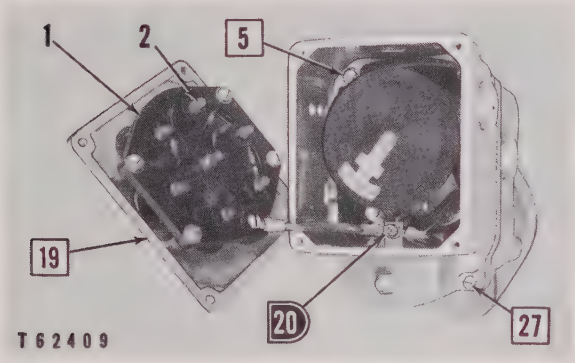

REMOVING END CAP

☐ Remove ◗ Disconnect

1–Distributor block. 2–Brush and spring assembly. 5–Screw (two). 19–End cap cover. 20–Wire. 27–Screw (two).

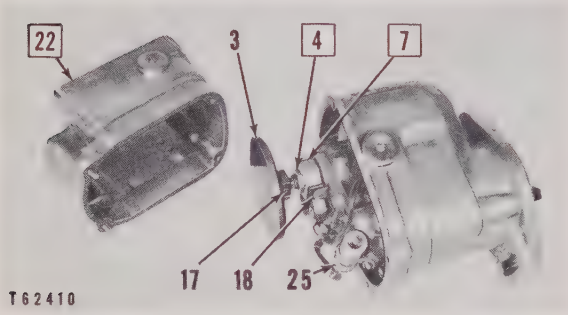

DISASSEMBLING MAGNETO

☐ Remove

3–Distributor disc. 4–Nut. 7–Cam. 17–Setscrew. 18–Contact points. 22–End cap. 25–Condenser.

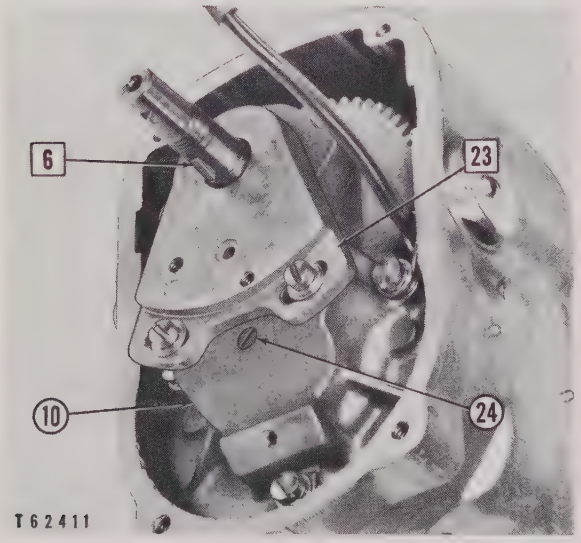

PREPARING TO REMOVE BEARING SUPPORT

☐ Remove

6–Key. 10–Bearing support. 23–Support bracket. 24–Setscrew.

NOTE

Cam **(7)** has two keyslots, one for each direction of magneto rotation. Each keyslot is marked with an arrow denoting direction of rotation. During assembly, engage key **(6)** with proper keyslot in accordance with direction of magneto rotation. For direction of magneto rotation, see topic, SPECIFICATIONS.

5. Remove bearing support screws. Insert a 1/4" - 20 NC forcing screw 1 1/2" long in place of setscrew **(24)** and remove bearing support **(10)**. During assembly, coat threads of setscrew **(24)** with shellac. Turn setscrew in until head is flush with bearing support.

NOTE

Distributor gear and shaft assembly **(11)** has letters "A" (anti-clockwise) and "C" (clockwise) marked on it. During assembly, align the letter denoting direction of magneto rotation with marked tooth **(B)** on rotor shaft pinion **(28)**. For direction of magneto rotation, see topic, SPECIFICATIONS.

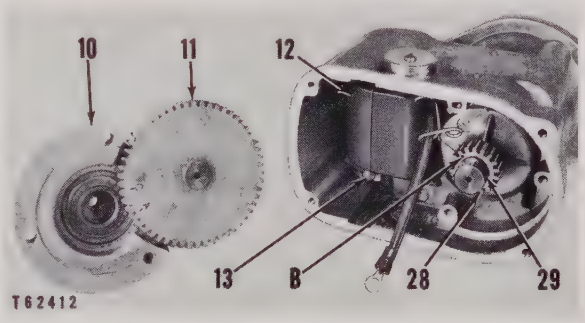

REMOVING BEARING SUPPORT

10–Bearing support. 11–Distributor gear and shaft assembly. 12–Coil. 13–Coil wedge and screw. 28–Rotor shaft pinion. 29–Rotor shaft assembly. B–Marked tooth on rotor shaft pinion.

6. Inspect bearing support **(10)** and bearings **(9)** and **(26)**. If bearing support or either bearing shows signs of wear, the entire bearing support must be replaced.

7. Distributor gear and shaft assembly **(11)** can be removed from bearing support **(10)**. Remove lock ring **(8)** and press from bearing support.

8. Loosen coil wedge and screws **(13)** and turn rotor shaft assembly **(29)** until flux lock is broken. Slide coil **(12)** from housing. Inspect for cleanliness. Test for continuity.

NOTE

Coil **(12)** has two leads. During assembly, shorter lead should be fastened under left coil wedge

screw. Longer lead should be fastened to breaker arm terminal screw.

9. Remove impulse coupling **(21)**.

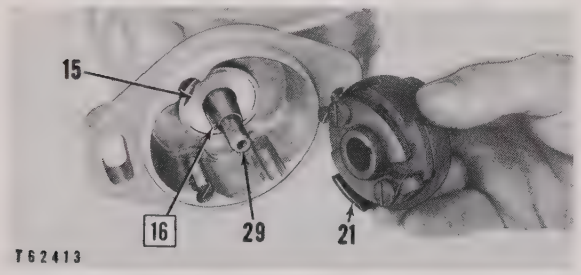

PREPARING TO REMOVE ROTOR SHAFT ASSEMBLY

☐ **Remove**

15–Outer washer. 16–Key. 21–Impulse coupling. 29–Rotor shaft assembly.

10. Remove outer washer **(15)** and seal **(33)** and inner washer **(32)** beneath it.
11. Remove lock ring **(31)** and press rotor shaft assembly from housing.
12. Remove washer **(30)** and press bearing **(14)** from housing.
13. Inspect all parts.
14. Assemble in reverse order of disassembly.
15. To install rotor shaft assembly **(29)**:
    a. Assemble distributor gear and shaft assembly **(11)** to bearing support **(10)**. Install lock ring **(8)**.
    b. Align marked tooth **(B)** on rotor shaft pinion **(28)** with proper tooth on distributor gear and shaft assembly **(11)** for proper direction of magneto rotation. For direction of magneto rotation, see topic, SPECIFICATIONS.
    c. Press rotor shaft assembly **(29)** into bearing support **(10)**.
    d. Install rotor shaft assembly and bearing support as a unit.

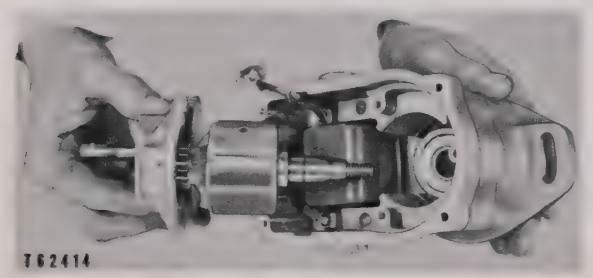

INSTALLING BEARING SUPPORT AND ROTOR SHAFT ASSEMBLY

    e. Press rotor shaft assembly **(29)** into housing and install lock ring **(31)**, seal **(33)**, and washers **(15)** and **(32)**. Do not install impulse coupling **(21)** until edge gap and contact point adjustments have been made.

NOTE

Insert a 3/16″ rod 3″ long in place of setscrew **(24)**. Press against end of rod to install rotor shaft assembly.

16. Adjust contact points. See topic, CONTACT POINTS.
17. Adjust edge gap setting. See topic, EDGE GAP.

Impulse Coupling

The impulse coupling is installed on the rear of the magneto. It provides the means for retarding the spark automatically during the starting period and intensifies the spark at low rotative speeds.

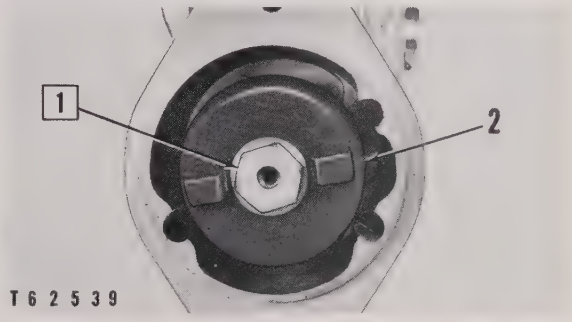

PREPARING TO DISASSEMBLE IMPULSE COUPLING

☐ **Remove**

1–Nut and washer. 2–Coupling shell.

1. Grasp one of drive lugs of coupling shell **(2)** firmly with a pair of pliers. Turn and pull coupling shell at same time until spring **(4)** releases.

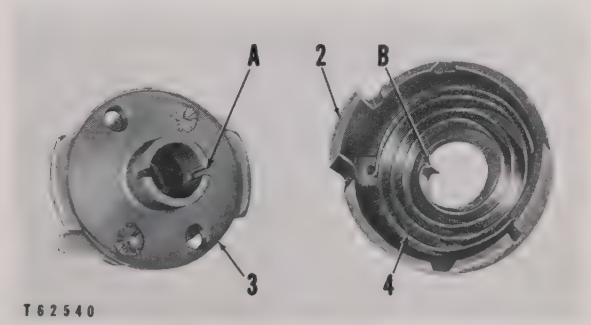

DISASSEMBLING IMPULSE COUPLING
(Clockwise rotation magneto shown)
2–Coupling shell. 3–Hub assembly. 4–Spring. A–Anchor slot. B–Spring end.

NOTE

Do not force coupling shell **(2)** to separate entirely from hub assembly **(3)**. Spring end **(B)** should first be pried out of slot **(A)**.

2. Pull hub assembly **(3)** from shaft.
3. Remove spring **(4)** from coupling shell **(2)**.
4. Inspect all parts.
5. Clean and lubricate before reassembly.
6. Assemble spring **(4)** to coupling shell **(2)**.

NOTE

Spring **(4)** must coil in proper direction for magneto rotation. For clockwise rotation magnetos, spring **(4)** must coil counterclockwise from **(B)**, as shown. For counterclockwise, it must coil clockwise from **(B)**. For direction of magneto rotation, see topic, SPECIFICATIONS.

7. Position spring end **(B)** in anchor slot **(A)**.
8. Wind spring one full turn and push coupling shell **(2)** and hub assembly **(3)** together.
9. Install coupling shell **(2)** and hub assembly **(3)** as a unit to rotor shaft assembly. Install nut and washer **(1)**.

Contact Points

Inspect contact points for mounds, craters, cleanliness, rubbing block or contact wear. Replace if necessary. Points can be cleaned with a petroleum solvent. Oil and grease of any kind must be kept away from the points.

NOTE

The contact points cannot be separated and must be removed and installed as a set.

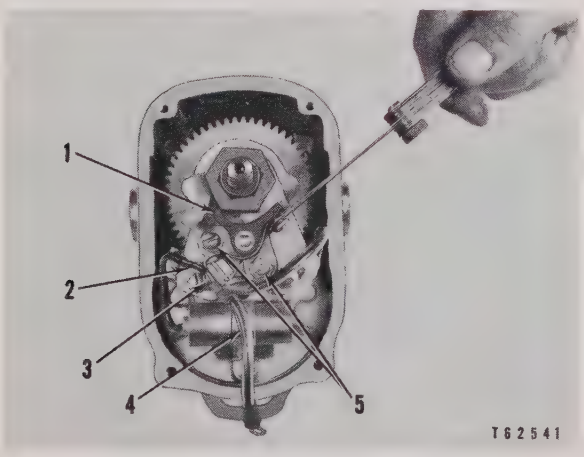

CONTACT POINTS
1–Breaker arm. 2–Wire. 3–Screw. 4–Wire. 5–Screws.

1. Remove contact point set:
   a. Remove screw **(3)**, wire **(2)** and wire **(4)**.
   b. Remove screws **(5)** which secure contact point set to support plate and remove.
2. Install in reverse order of removal.

NOTE

Do not relubricate cam wick. Replace if necessary.

3. Adjust points to proper opening.
   a. Position high point of cam against arm **(1)**.
   b. Loosen screws **(5)**.
   c. Insert a thickness gauge between points as shown. See topic, SPECIFICATIONS, for proper gap opening.
   d. Move point set either left or right to obtain proper setting.
   e. Tighten screws **(5)** and recheck setting.

Magneto Edge Gap

Maximum ignition discharge is obtained by interrupting the primary circuit at the instant the primary circuit reaches its maximum value. This point is reached when the rotor pole shoe is 1/8″ past the housing field. At this point, the contact points should just be beginning to open.

Adjustment:

1. Check contact points and adjust to proper gap.
2. Remove impulse coupling.
3. Turn the rotor shaft so the keyway is up, then turn the shaft approximately 15° in direction of magneto rotation as shown. See topic, SPECIFICATIONS for direction of magneto rotation.

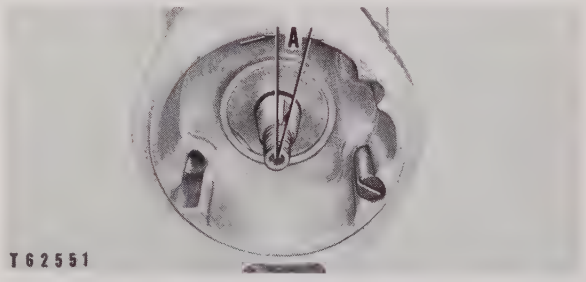

EDGE GAP ADJUSTMENT
(Clockwise rotation magneto shown)
A–15° angle.

4. View magneto from drive end. Remove setscrew and insert an 1/8″ rod **(4)** in timing hole **(3)**. Use right hole for clockwise rotation magnetos and left hole for counterclockwise rotation magnetos. Illustration shows rod **(4)** inserted in proper hole for clockwise rotation magneto.

NOTE

See topic, SPECIFICATIONS, for direction of magneto rotation.

5. Loosen support plate screws **(1)**.

6. Press rod **(4)** inward until it contacts rotor. Turn rotor shaft in direction opposite normal rotation until rod locks tight between the rotor pole shoe and housing field.

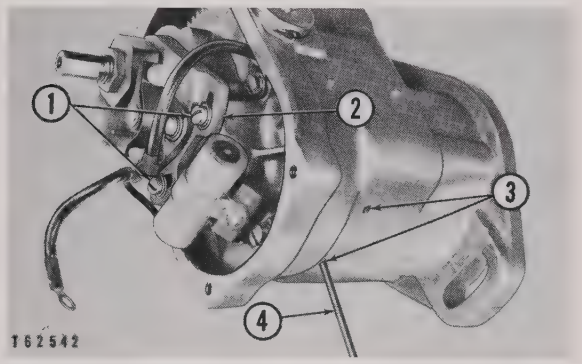

EDGE GAP ADJUSTMENT
(Clockwise rotation magneto shown)
1–Support plate screws. 2–Support plate. 3–Timing holes. 4–Rod.

7. With rotor in this position, move plate **(2)** either left or right until contact points start to open. Tighten support plate screws **(1)** securely.

NOTE

The point of initial contact point opening can be determined by inserting a thin piece of cellophane between the points, by using a timing light, or by using a sounding device.

8. Install impulse coupling.

Timing Magneto to Engine

1. Remove timing pointer cover from flywheel housing.

2. Rotate crankshaft in direction of engine rotation until No. 1 piston is coming up on the compression stroke.

3. Continue rotating crankshaft until desired timing mark appears directly under flywheel pointer. See topic, SPECIFICATIONS.

4. Remove the timing bolt from top of magneto end cap.

5. Turn rotor shaft until timing mark **(2)** is centered in timing window. This indicates that terminal **(1)** is ready to fire.

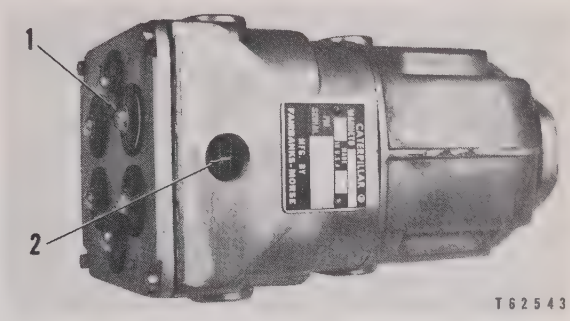

TIMING MARK ON DISTRIBUTOR DISC
1–Terminal. 2–Timing mark.

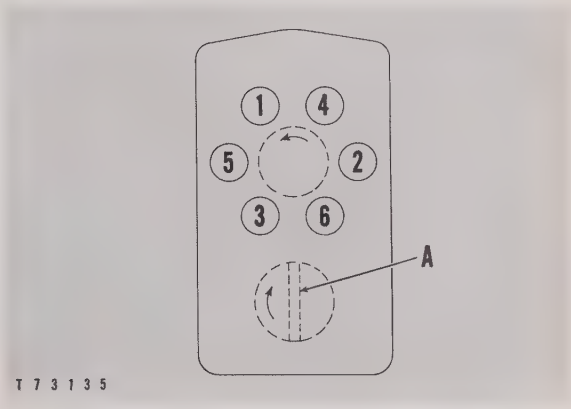

MAGNETO OUTLET NUMBERING DIAGRAM
A–Drive tang.

NOTE

No. 1 terminal is of negative (−) polarity, located in upper left corner of end cap cover and is indicated by a mark on the cover.

6. Drive tang **(A)** should be in position shown, as viewed through magneto from terminal end.

7. With No. 1 piston in proper firing position, drive slot should be in position to mesh with drive tang **(A)**.

NOTE

If drive slot is not in this position, pull drive shaft forward, position it, and engage gear teeth.

8. Install magneto to magneto drive housing, leaving mounting bolts loose. Approximate timing to engine is now obtained.

9. Use a timing light to obtain exact timing to engine. Mark desired timing mark on flywheel with chalk or white paint to make it more visible under timing light.

10. Connect timing light with spark plug of No. 1 cylinder.

NOTE

Do not puncture spark plug wire insulation. Use a jumper wire to connect timing light.

11. With engine operating, rotate magneto housing on the drive housing to advance or retard the timing.
12. When magneto is propely timed to engine, the mark on flywheel will align with pointer as timing light flashes. Tighten mounting bolts securely and recheck timing.

IGNITION TRANSFORMER

Removal and Installation

1. Disconnect wires from terminal **(4)**.

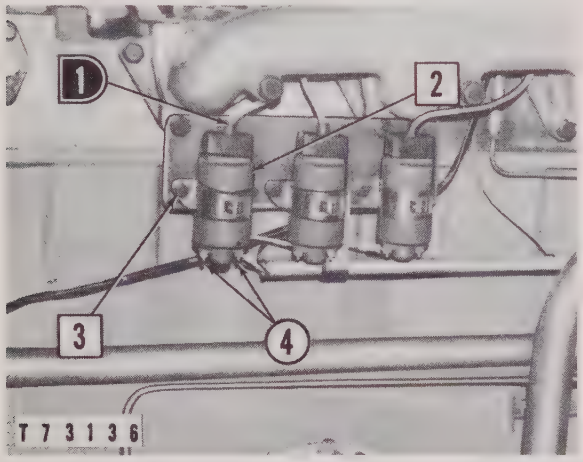

REMOVING IGNITION TRANSFORMER

☐ Remove ◗ Disconnect

1–High tension lead. 2–Ignition transformer. 3–Bolts (two). 4–Terminals.

NOTE

The remaining transformers are removed in a similar manner.

2. Inspect transformers, connections, and terminals for dirt or corrosion. Clean as necessary.
3. Measure resistance of primary and secondary circuits. The value obtained should be compared with that of a transformer that is known to be good.
4. Install in reverse order of removal.

NOTE

The positive (+) posts of No.'s 1, 2 and 3 transformers are grounded, while the negative (−) posts of No's 4, 5 and 6 are grounded.

SPARK PLUGS, COVERS AND ADAPTERS

Removal and Installation

Remove cover **(1)** from spark plug **(2)** and adapter **(3)**.

NOTE

Do not peel lip **(A)** from adapter. Grasp the cover by handle and pull upward.

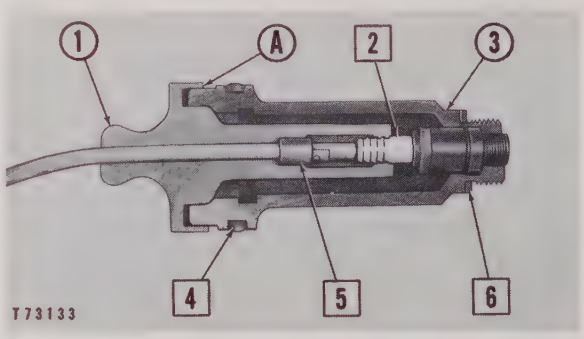

SPARK PLUG, COVER AND ADAPTER
(Cross Section Shown for Better Illustration)

☐ Remove

1–Cover. 2–Spark plug. 3–Adapter. 4–Seal. 5–Spacer. 6–Gasket. A–Lip.

Inspect spark plugs for proper gap and damaged insulation or electrodes. See the SPECIFICATIONS.

Coat seal groove of adapters **(3)** and seal **(4)** with liquid soap. Install adapter into cylinder head. Tighten to torque value given in the SPECIFICATIONS.

Fuel Pump and Governor Drive

REMOVAL AND INSTALLATION OF FUEL PUMP AND GOVERNOR DRIVE HOUSING

1. Remove the fuel supply line **(2)**.
2. Remove the water lines **(4)**.
3. Remove the exhaust pipe **(6)**.

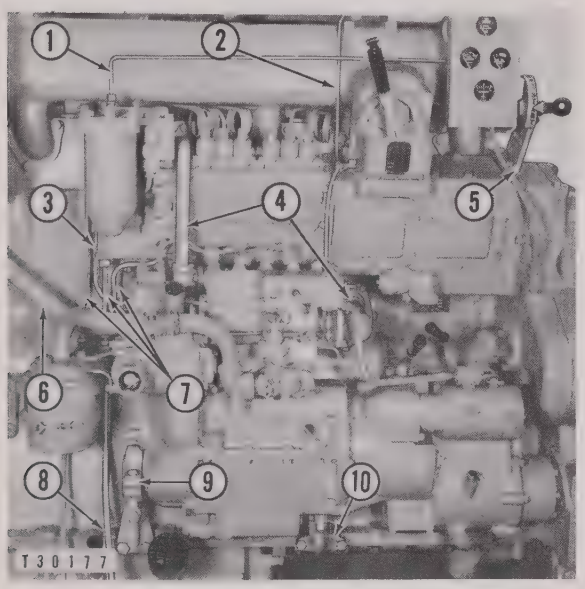

PREPARING TO REMOVE FUEL PUMP AND GOVERNOR DRIVE HOUSING
1–Fuel pressure line. 2–Fuel supply line. 3–Clamp. 4–Water lines. 5–Compression release bracket. 6–Exhaust pipe. 7–Fuel lines. 8–Water overflow line. 9–Front support. 10–Rear support.

4. Disconnect the fuel pressure line **(1)**, the fuel lines **(7)** and the overflow line **(8)**.
5. Remove the bolt securing the clamp **(3)** and the common lubrication line to the transfer pump.
6. Remove the bolts securing the compression release bracket **(5)** to the governor drive housing.
7. Remove the starting engine rear support **(10)**.
8. Loosen the clamping bolt on the starting engine front support **(9)**.
9. Pivot the upper portion of the starting engine away from the diesel engine to provide clearance to remove the fuel pump and governor drive housing.
10. When enough clearance is obtained between the starting engine and the cylinder block, tighten the clamping bolt **(13)** on the starting engine front support.
11. Remove the fuel lines **(11)**. Cover the openings on the fuel lines, injection valves, and the fuel injection pumps.
12. Remove the bolts that secure the drain and bracket **(12)** to the cylinder block.

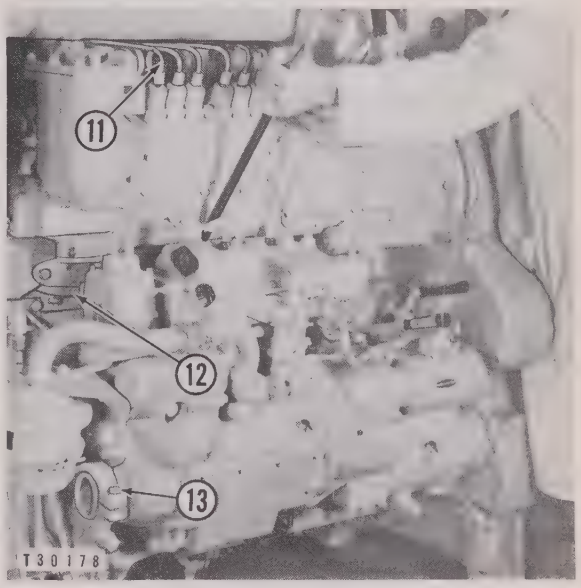

PREPARING TO REMOVE FUEL PUMP AND GOVERNOR DRIVE HOUSING
11–Fuel line. 12–Drain and bracket. 13–Clamping bolt.

13. Remove the cover from the rear side of the fuel pump and governor drive gear **(14)**.
14. Bend the lock and remove the retaining nut from the shaft.
15. Install the 8H700 Puller as illustrated and pull the gear from the shaft.

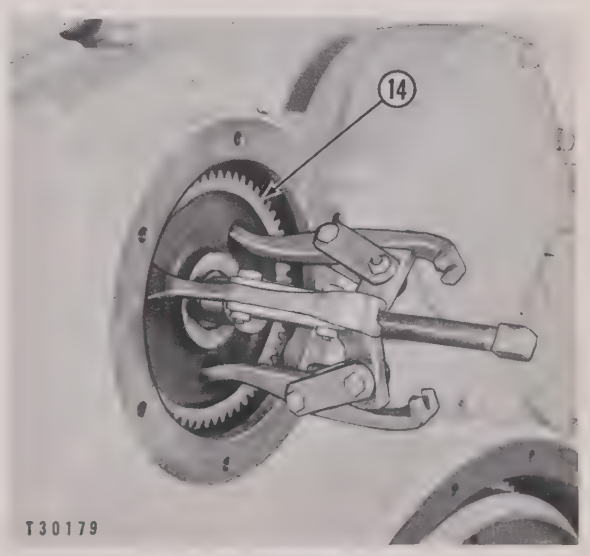

PULLING GEAR FROM SHAFT
14–Fuel pump and governor drive gear.

16. Remove the key from the shaft.
17. Bend the locks **(15)** and remove the bolts **(16)** and the locks.

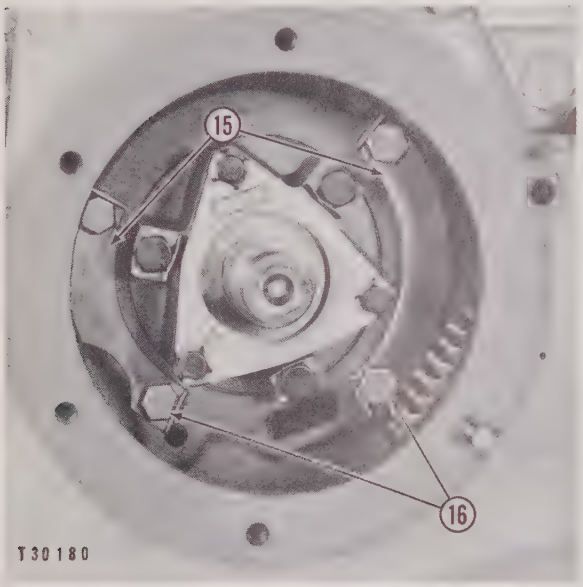

PREPARING TO REMOVE FUEL PUMP AND GOVERNOR DRIVE HOUSING
15–Locks. 16–Bolts.

18. Attach a suitable sling and hoist and support the weight of the assembly.
19. Remove the bolts that secure the fuel pump and governor drive housing **(17)** to the flywheel and timing gear housing **(18)**.
20. Make a final check to determine if all necessary disconnections have been made.

REMOVING FUEL PUMP AND GOVERNOR DRIVE HOUSING
17–Fuel pump and governor drive housing. 18–Flywheel and timing gear housing.

21. Move the entire assembly forward and away from the engine.
22. Install the fuel pump and governor drive housing in the reverse order of removal.
23. See the topic, TIMING THE FUEL INJECTION PUMP CAMSHAFT, for the timing procedure.

DISASSEMBLY AND ASSEMBLY OF FUEL PUMP AND GOVERNOR DRIVE

1. Remove the fuel injection pump housing, governor, service meter and the governor drive pinion. See the covering topics.
2. Remove the shaft **(1)** and the shaft assembly **(4)** from the housing as a unit.

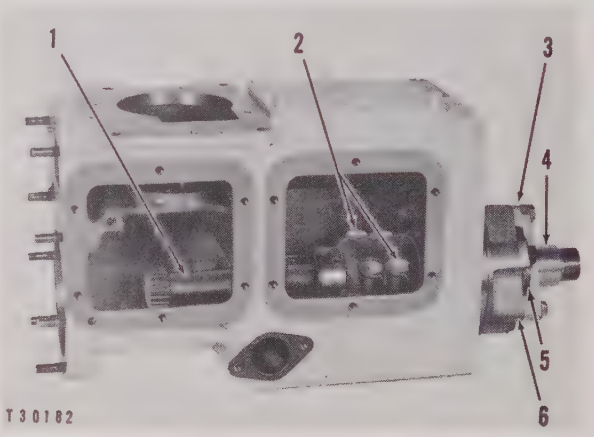

PREPARING TO DISASSEMBLE FUEL PUMP AND GOVERNOR DRIVE
1–Shaft. 2–Bolts. 3–Washer. 4–Shaft assembly. 5–Washer. 6–Cage assembly.

3. Bend the locks and remove the bolts **(2)** that secure the shaft to the shaft assembly. The shafts can then be separated.

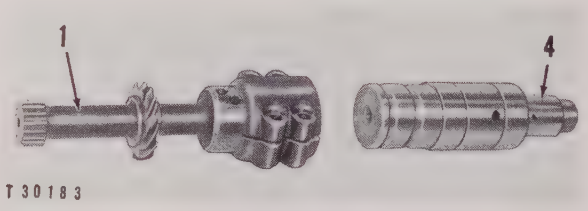

SHAFT AND SHAFT ASSEMBLY SEPARATED
1–Shaft. 4–Shaft assembly.

4. Bend the locks and remove the bolts that secure the washers **(3)** and **(5)** and the cage assembly **(6)** to the housing.
5. Remove the washers and cage assembly.
6. Press the bearings **(7)** and **(8)** from the cage,

if they are worn or damaged and install new ones.

7. Install new washers **(3)** and **(5)** if the end clearance of the shaft **(4)** is too great. See the topic, SPECIFICATIONS.

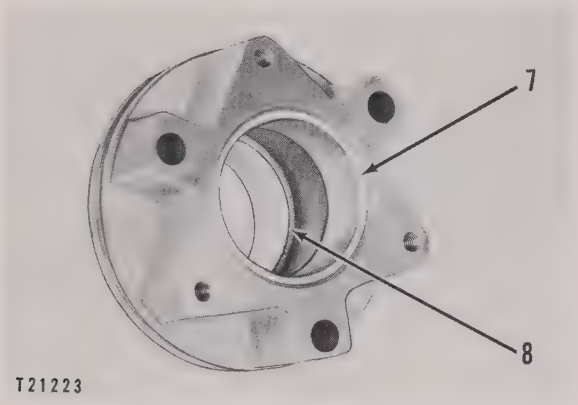

PREPARING TO REMOVE BEARINGS FROM CAGE
7–Bearing. 8–Bearing.

8. Install the cage assembly **(6)** with the oil hole up.
9. Install the shaft **(1)** and the shaft assembly **(4)**, leaving the bolts **(2)** loose to permit timing the fuel injection pump camshaft.
10. Complete the assembly in the reverse order of disassembly.

GOVERNOR

A spring and rotating weight governor is located on the left rear of the engine on top of the fuel pump and governor drive housing. The governor control lever is mounted directly on the governor housing.

Rack settings are carefully set at the factory and should not be changed without specific instructions to do so. An incorrectly adjusted fuel rack affects the operation of the turbocharger. See the topic, ALTITUDE OPERATION.

The governor is sealed with wire and aluminum seals. The governor mounting bolts are also sealed and the seal must be broken to remove the governor from the fuel pump and governor drive housing.

Operation and Lubrication

The operator selects a desired engine speed by moving the governor control lever. The governor maintains this speed nearly constant even though the load varies.

The centrifugal force of the governor weights **(11)**, acting through the sleeve assembly **(15)**, bearing **(9)** and the cage **(7)**, opposes the force created by the compression on the governor spring **(5)**. These forces always tend to balance. These balanced forces hold the fuel pump rack assembly **(12)**, which controls the amount of fuel delivered to the engine, in such a position to make the engine operate at a constant speed.

When the engine encounters a load, the speed decreases. The centrifugal force of the governor weights decreases; the spring, opposed by a lesser force, moves the rack assembly in a direction which gives the engine more fuel which increases the power. The engine speed will then increase until the force of the governor weights again balances the compression of the governor spring.

This sequence is reversed when the load on the engine is decreased.

The adjustment screw **(8)** limits the distance the rack assembly can travel. The stop **(4)** contacts the high idle adjustment screw **(1)** to control the engine high idle speed.

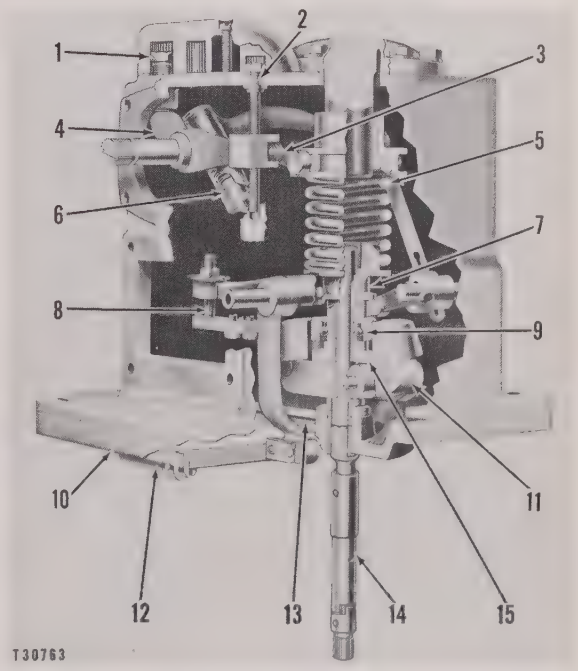

GOVERNOR CUTAWAY VIEW
1–High idle adjustment screw. 2–Low idle adjustment screw. 3–Roller. 4–Stop. 5–Spring. 6–Plunger. 7–Cage. 8–Adjustment screw. 9–Bearing. 10–Governor adapter. 11–Weight. 12–Fuel pump rack assembly. 13–Passage. 14–Flexible spindle. 15–Sleeve assembly.

The flexible governor drive spindle assembly **(14)** provides a cushioned drive for the governor. It consists of a spindle and a shaft joined together by five flat springs. The adjacent ends of the sleeve and collar, which fit over the spindle and shaft respec-

tively, have mating lugs which limit the relative angular movement of the spindle and shaft.

When the governor control lever is moved to the low idle position the plunger **(6)** contacts the lower portion of the roller **(3)**. As the governor control lever is moved still further to decrease the engine speed, the plunger **(6)** compresses the spring, which contacts it, permitting the plunger to move above the roller **(3)**, thus moving the fuel pump rack to the shut-off position to stop the engine.

The governor is lubricated by oil from the engine lubricating system. Oil from a tube in the timing gear compartment supplies oil to a passage in the fuel pump and governor drive housing. The oil is directed through drilled passages to the passage **(13)** in the governor adapter **(10)**. The oil then enters a groove and a drilled passage in the flexible spindle **(14)** and is forced to the upper portion of the spindle where it is released through two cross drilled passages to lubricate the various parts of the governor by splash. The oil falls down upon the governor pinion drive and drains back into the timing gear compartment through an oil return hole at the rear of the fuel pump and governor drive housing.

Governor Seals

The governor idle speed cover **(2)**, the rack adjusting screw cover **(4)** and the governor mounting bolt are sealed with wire and aluminum seals.

To remove the governor from the housing remove the seal **(3)**.

To adjust the high and low idle speeds the seal **(1)** must be removed. In order to adjust the rack setting, the seal **(3)** must be removed.

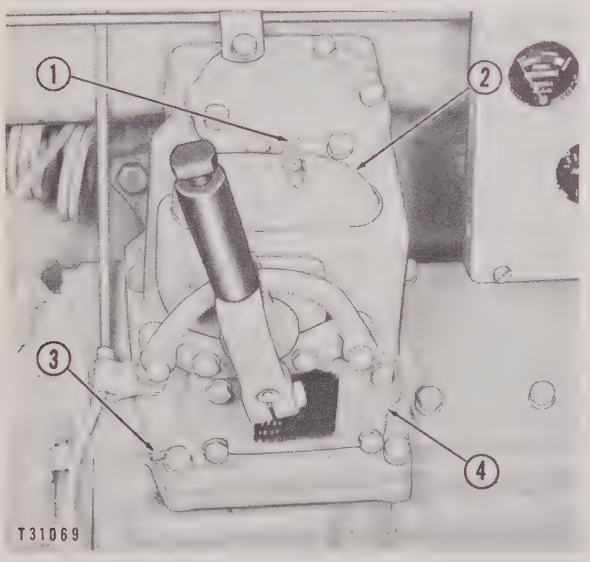

GOVERNOR SEALS
1–Seal. 2–Idle speed cover. 3–Seal. 4–Rack adjusting screw cover.

Rack settings are carefully set at the factory and should not be changed without specific instructions. An incorrectly adjusted fuel rack effects the operation of the turbocharger. See the topic, ALTITUDE OPERATION.

NOTE

Factory installed seals are identified by the letters CT CO. Dealer's 6H4160 Sealing Tool Assembly will impress the letters DLR on the seals.

Removal and Installation

1. Disconnect the fuel line clamp **(2)** from the governor housing.

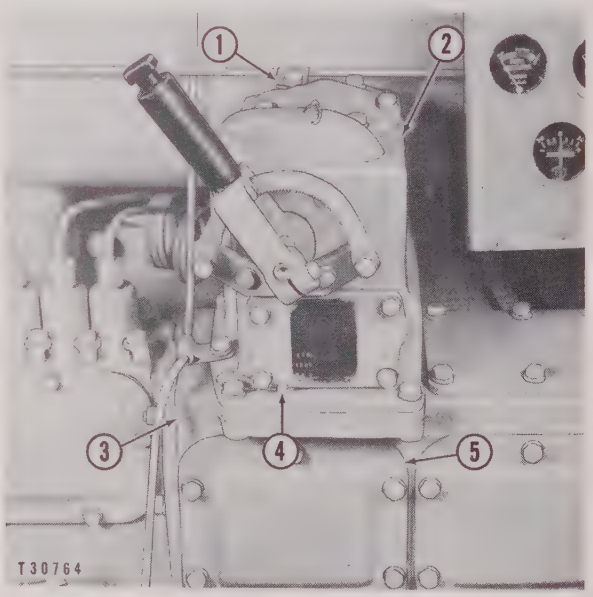

PREPARING TO REMOVE GOVERNOR
1–Clamp. 2–Governor housing. 3–Governor drive housing. 4–Seal. 5–Cover.

2. Break the seal **(4)** and remove the bolts that secure the governor housing **(2)** to the governor drive housing **(3)**.
3. Remove the inspection cover **(5)**.
4. Through the inspection opening, disconnect the spring-loaded pin **(7)** from the fuel rack link.
5. Lift the governor upward and off the engine carefully so as not to damage the splines on the shaft **(6)** and the governor drive pinion **(8)**.
6. Install in the reverse order of removal. See the topic, GOVERNOR SEALS, for sealing the mounting bolt.

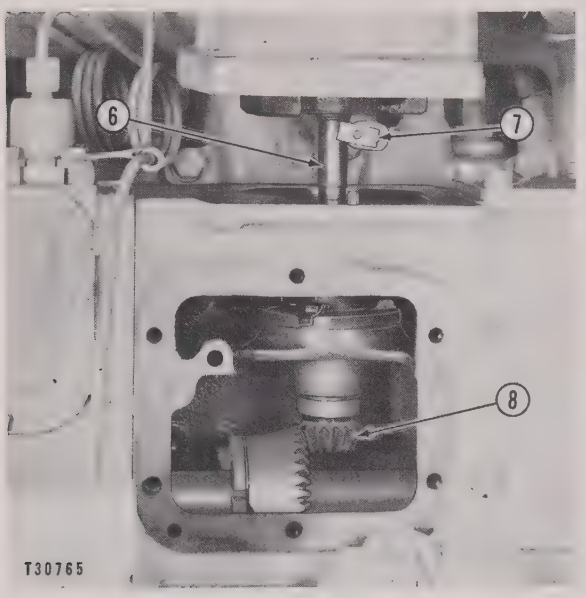

REMOVING THE GOVERNOR
6–Shaft. 7–Spring-loaded pin. 8–Governor drive pinion.

Adapter Removal and Disassembly

Remove the governor from the engine. See the topic, GOVERNOR REMOVAL AND INSTALLATION.

Remove the screws which hold the adapter assembly **(2)** to the housing **(1)** and remove the adapter assembly.

NOTE

The adapter assembly is located by dowels on the housing.

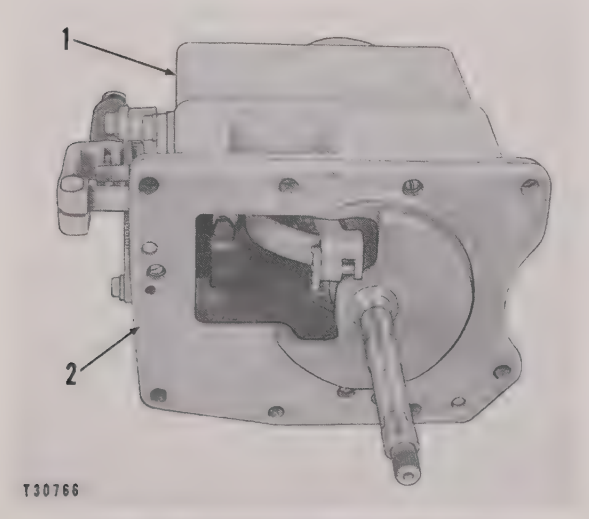

REMOVING THE ADAPTER ASSEMBLY
1–Housing. 2–Adapter.

The bearing **(3)** can be pressed from the adapter and replaced if worn or damaged.

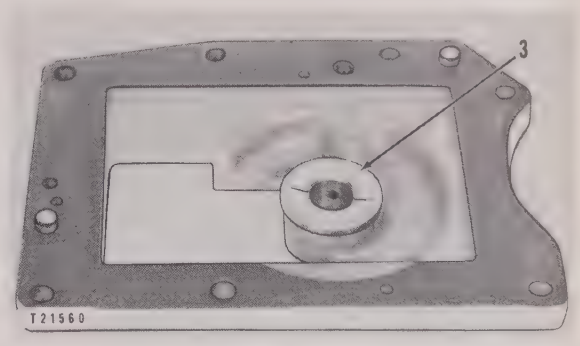

ADAPTER BEARING
3–Bearing.

Spindle Disassembly and Assembly

1. Remove the spindle assembly **(4)** from the housing.

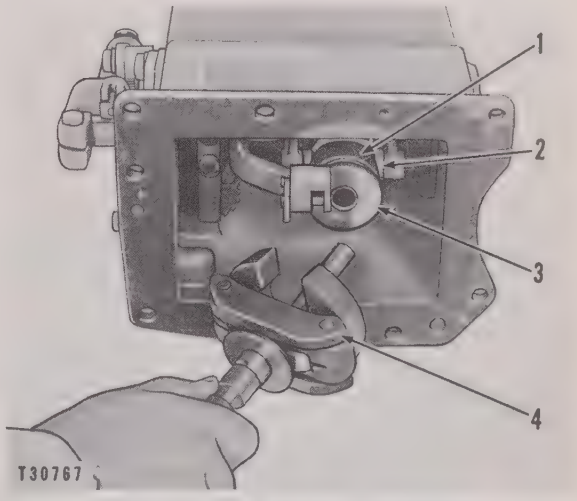

REMOVING THE SPINDLE ASSEMBLY
1–Cage assembly. 2–Block. 3–Sleeve assembly. 4–Spindle assembly.

2. Remove the sleeve assembly **(3)** and cage assembly **(1)** as a unit.

NOTE

The bearing in the cage assembly **(1)** can be replaced by pressing the bearing and sleeve from the cage assembly.

3. Remove the two blocks **(2)**.
4. Drive the dowels **(6)** out of the spindle assembly **(9)** and remove the sleeve **(8)**, the splined shaft **(5)** and springs **(7)**.

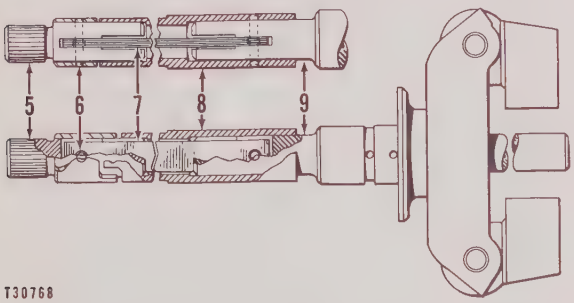

REMOVING SHAFT AND SPRINGS FROM SPINDLE
5–Shaft. 6–Dowel. 7–Springs. 8–Sleeve. 9–Spindle assembly.

NOTE

When assembling the springs to the spindle and shaft, stake both dowels into position in two places on each end.

6. Press the washer **(10)** from the spindle **(9)** using the 8H663 Bearing Pulling Attachment as illustrated.
7. Press out the pins **(11)** and remove the weights **(12)**.
8. Replace the bearings in the weights if worn or damaged.

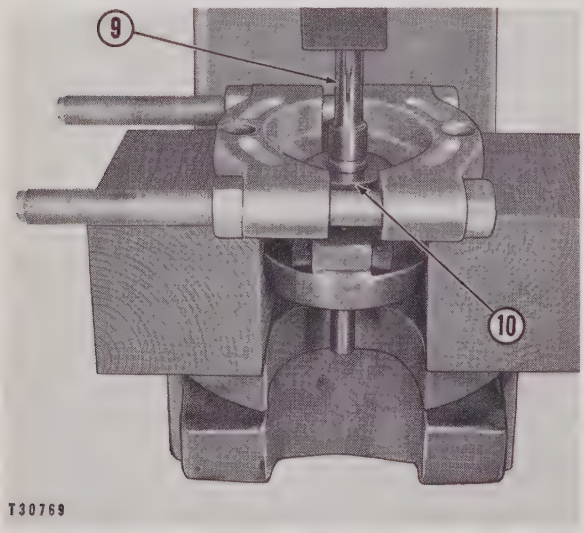

PRESSING WASHER FROM SHAFT
9–Spindle. 10–Washer.

NOTE

A pin in the shaft fits into a groove on the inner diameter of the washer to prevent the washer from turning on the shaft. When installing a new washer, be sure the pin and groove are properly aligned.

9. Place the weights into position and press the pins into place.
10. Use a small diameter punch through the holes **(13)** to stake metal which remains at the bottom of the holes into the grooves in the pins **(11)**.

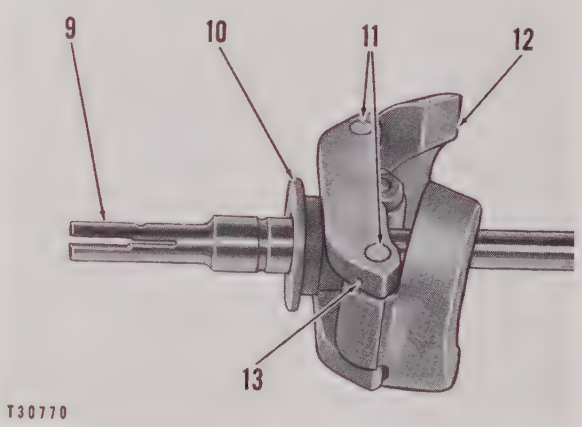

PREPARING TO DISASSEMBLE SPINDLE
9–Spindle. 10–Washer. 11–Pins. 12–Weight. 13–Hole.

NOTE

If the metal is sheared from the bottom of the holes **(13)** when removing the pins, drill a new hole with a 3/32″ drill to a depth sufficient to leave 1/16″ of metal between the bottom of the hole and the pin bore for staking into the pin groove.

Lever and Spring Removal

1. Remove the stop assembly **(1)** and the spring **(5)** from the housing.

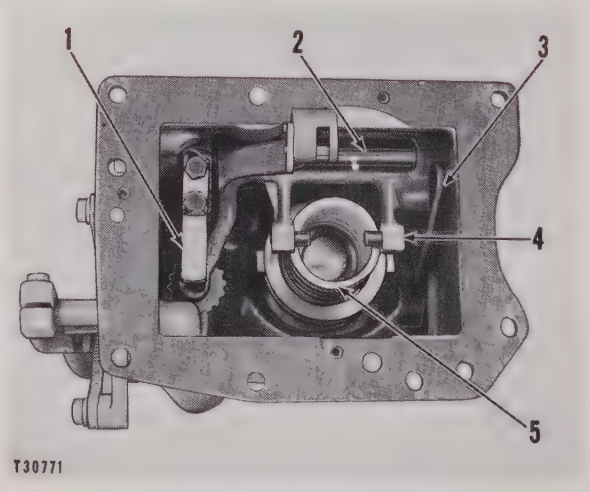

DISASSEMBLY OF GOVERNOR
1–Stop. 2–Shaft. 3–Link. 4–Lever assembly. 5–Spring.

2. Remove the cover from the side of the housing and drive out the shaft **(2)**.
3. Disconnect the link **(3)** from the lever assembly **(4)** and remove the lever assembly.
4. Remove the bearings from the lever assembly and replace them if worn or damaged.

Guide and Blocks Removal

Remove the cover **(1)** from the housing.

Remove the guide assembly **(3)** and blocks **(2)** through the bottom of the housing.

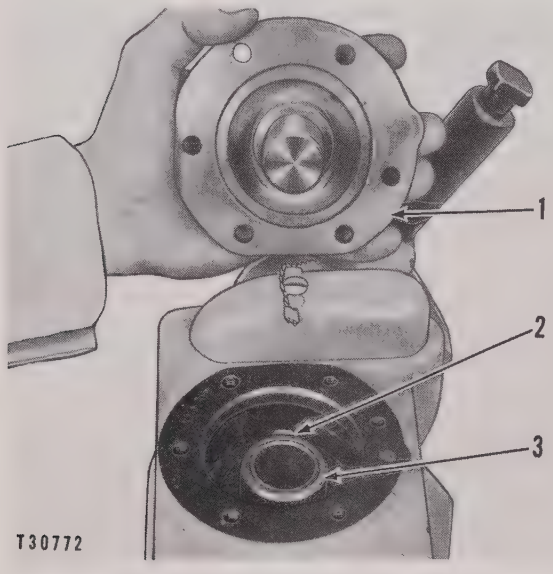

REMOVING THE GUIDE ASSEMBLY
1–Cover. 2–Block. 3–Guide assembly.

Governor Control Removal

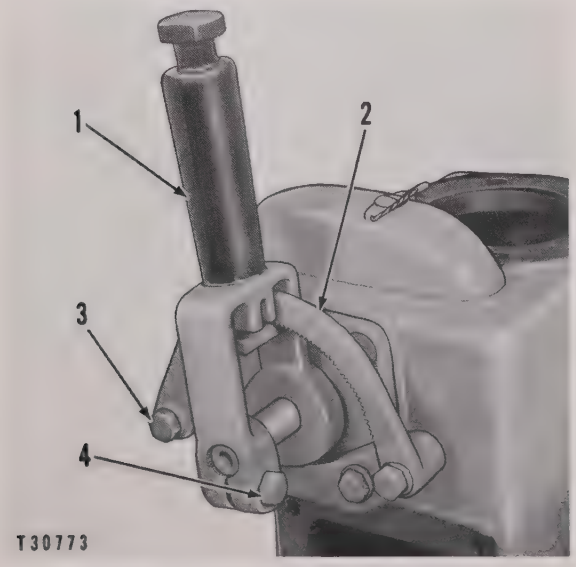

PREPARING TO REMOVE GOVERNOR CONTROL
1–Control handle. 2–Ratchet. 3–Bolt. 4–Bolt.

1. Remove the bolts **(3)** and the ratchet **(2)**.
2. Loosen the clamping bolt **(4)** and pull the handle **(1)** off the shaft.
3. Remove the adapter **(7)** and the support **(5)**.
4. Inspect the seal **(6)** and replace if damaged.
5. Install in the reverse order of removal.

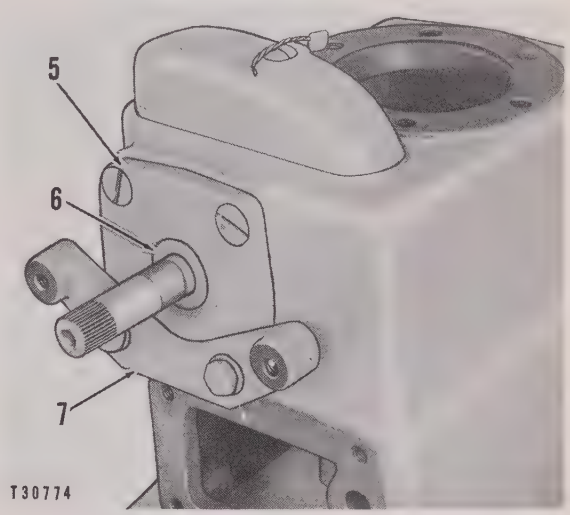

PREPARING TO REMOVE SUPPORT
5–Support. 6–Seal. 7–Adapter.

Lever Assembly Removal and Disassembly

Using a 5/16″-18 (NC) bolt with sufficient threads, a nut, a large washer, and a spacer 1⅝″ long with a ⅝″ inside diameter, pull the guide **(1)** from the housing.

Remove the lever assembly **(2)** from the housing.

Remove the link **(3)** and lever **(4)** from the lever assembly. Inspect the roller **(5)**.

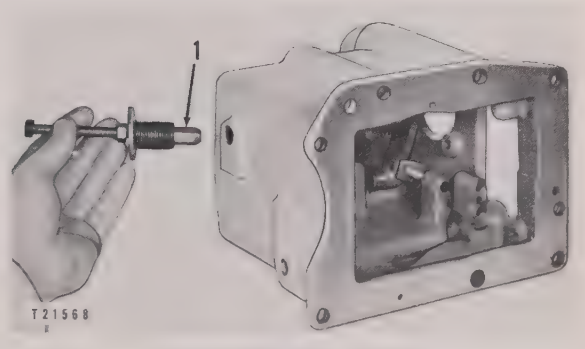

REMOVING THE GUIDE
1–Guide.

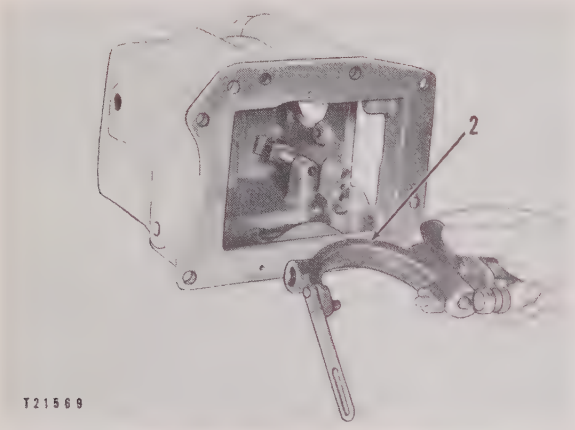

REMOVING THE LEVER ASSEMBLY
2–Lever assembly.

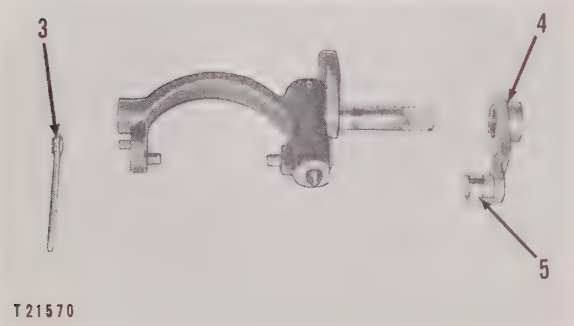

DISASSEMBLY OF LEVER ASSEMBLY
3–Link. 4–Lever. 5–Roller.

Idle Adjusting Screws Removal

NOTE

The cover **(1)** is sealed at the factory. See the topics, ALTITUDE OPERATION and GOVERNOR SEALS.

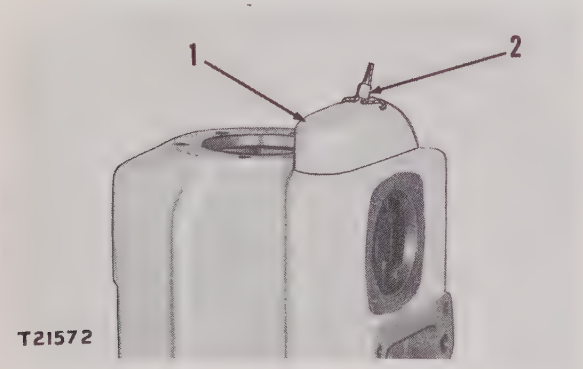

REMOVING THE COVER
1–Cover. 2–Seal.

Break the seal **(2)** and remove the cover **(1)**.

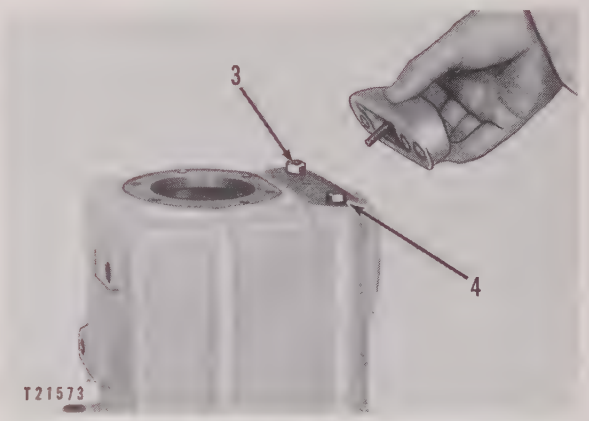

REMOVING THE ADJUSTING SCREWS
3–Low idle adjusting screw. 4–High idle adjusting screw.

Remove the high idle adjusting screw **(4)** and the low idle adjusting screw **(3)**.

NOTE

There is a guide on the low idle screw **(3)** which can be removed from within the housing while removing the screw.

Drive Pinion Removal and Installation

1. Remove the governor. See the covering topic.
2. Bend the locks and remove the bolts that secure the cage assembly **(1)** to the housing.

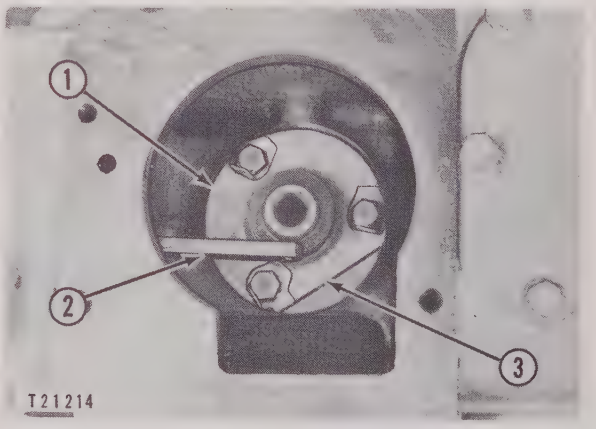

PREPARING TO REMOVE GOVERNOR DRIVE PINION
1–Cage assembly. 2–Fuel rack link. 3–Flat surface on cage assembly.

3. Remove the governor drive pinion assembly by lifting and rotating it slightly to allow the flat surface **(3)** on the cage assembly to clear the fuel rack link **(2)**.

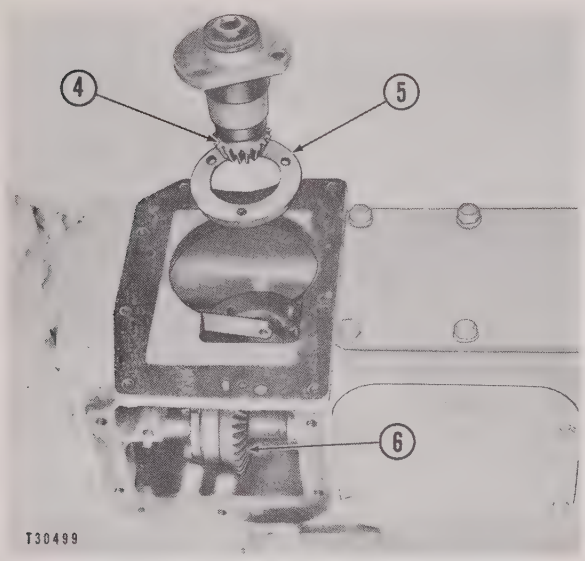

DRIVE PINION AND SHIMS REMOVED
4–Gear. 5–Shim. 6–Gear.

4. Remove the shims **(5)** which are used to provide backlash between the gear **(4)** and the gear **(6)**.
5. At time of installation, install enough shims **(5)** between the cage assembly and the housing to provide .002″ to .006″ backlash between the gear **(4)** and gear **(6)**.
6. The holes in the shims and cage are not equally spaced, making assembly possible in one position only.

Drive Pinion Disassembly and Assembly

1. Using a suitable spacer, press the pinion **(1)** from the cage assembly **(4)** and remove the washer **(2)**.

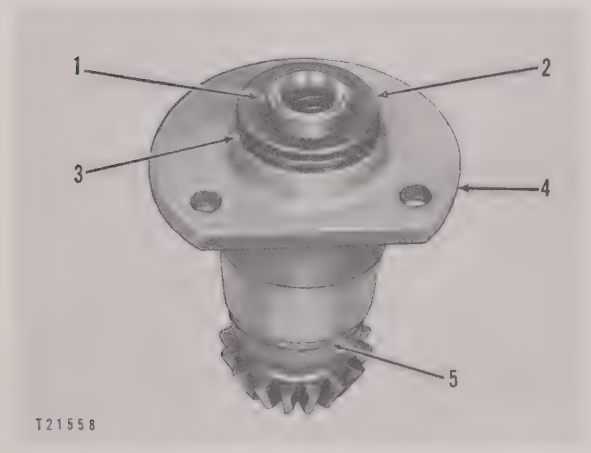

REMOVING THE PINION AND BEARINGS
1–Pinion. 2–Washer. 3–Bearing. 4–Cage assembly. 5–Bearing.

2. Inspect the bearings **(3)** and **(5)** for wear or damage.
3. Install a new cage assembly if the bearings are unfit for further use.
4. Install the pinion and press the washer onto the pinion.

NOTE

With the washer pressed tight against the flange of the bearing **(3)**, the cage assembly must have .002″ to .006″ end clearance.

High and Low Idle Speed

The engine idle speed can be checked at the tachometer drive connection on the service meter. Remove the cap and insert a hand tachometer as shown. The reading observed will be actual engine speed.

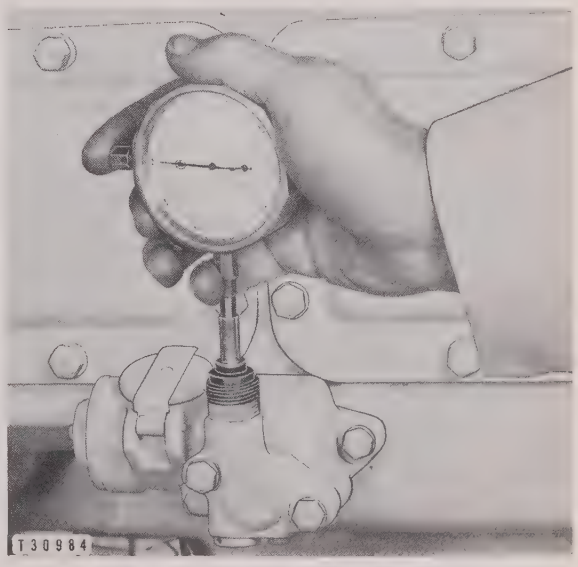

CHECKING ENGINE IDLE SPEED

Without a tachometer drive connection check the engine idle speed at the service meter by removing the cover and applying the hand tachometer directly to the service meter shaft. The reading observed will be one-half actual engine speed.

The high and low idle speeds can be adjusted by removing the cover **(4)** on the top of the governor and turning the adjusting screws **(1)** and **(3)**. The screw **(1)**, which is nearest the front of the governor, adjusts the high idle speed and the screw **(3)** adjusts the low idle speed. The holes **(2)**, in the cover **(4)**,

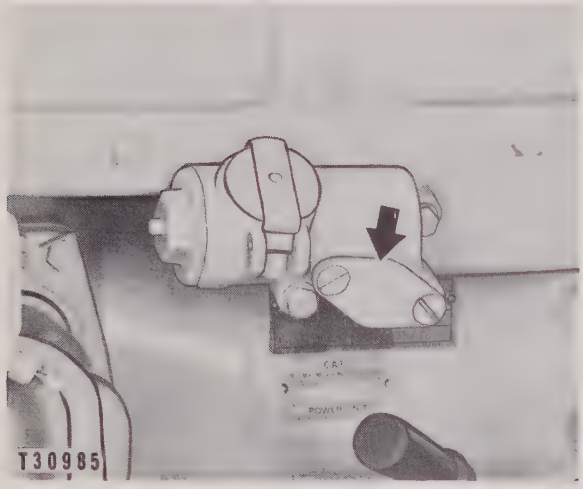

COVER TO BE REMOVED FOR CHECKING ENGINE IDLE SPEED

are shaped to act as retainers to prevent the screws from turning after the adjustment is made.

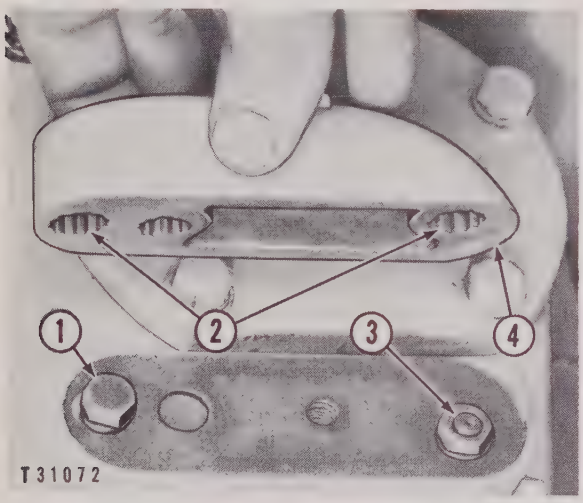

GOVERNOR ADJUSTMENTS
1–Screw. 2–Retainer holes. 3–Screw. 4–Cover.

To adjust the idle speed settings, remove the cover **(4)** and turn the desired adjusting screw. Turning the adjusting screw in a clockwise direction will decrease the idling speed.

After setting the idle speed, move the governor control lever to change the engine speed. Return it to the desired idle position and recheck the idle speed. Repeat this procedure until the desired idle speeds are obtained.

Fuel Rack Setting

The fuel rack setting can be checked and adjusted with the fuel injection pump housing either removed or installed on the engine.

1. Remove the fuel injection pump **(2)**.
2. Break the seal **(4)** and remove the cover **(5)**, exposing the fuel rack adjusting screw.

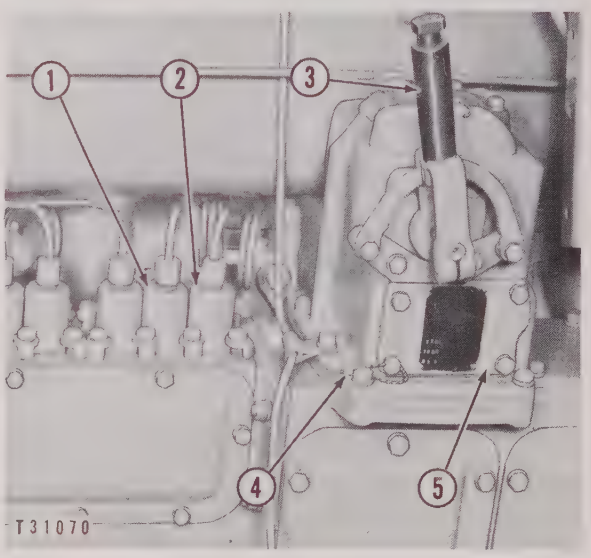

PREPARING TO CHECK FUEL RACK SETTING
1–Fuel injection pump. 2–Fuel injection pump. 3–Governor control lever. 4–Seal. 5–Cover.

3. Install the 3H1690 Fuel Rack Setting Gauge **(6)** on the fuel injection pump housing in the same manner as installing a fuel injection pump.

NOTE

Place the gauge on the dowels with the marked tooth on the gauge aligned with the marked tooth on the fuel rack. Tooth marks are visible through the openings in the gauge dial and body. If the marks are not visible, remove the fuel injection pump **(1)**, and the marks can then be seen through the opening in the fuel injection pump housing.

4. Move the governor control lever **(3)** to the fuel on position.
5. Loosen the locknut **(8)**, raise the lock **(7)** off the lock pin **(10)** and turn the adjusting screw **(9)** clockwise to decrease the rack setting, or counterclockwise to increase the rack setting.
6. Place a thickness gauge, the same thickness as the spacer **(13)**, under the torque spring **(12)**. This will prevent deflection of the spring and an inaccurate reading.

NOTE

If no torque spring is used, turn the adjusting screw until it just touches the block **(11)**.

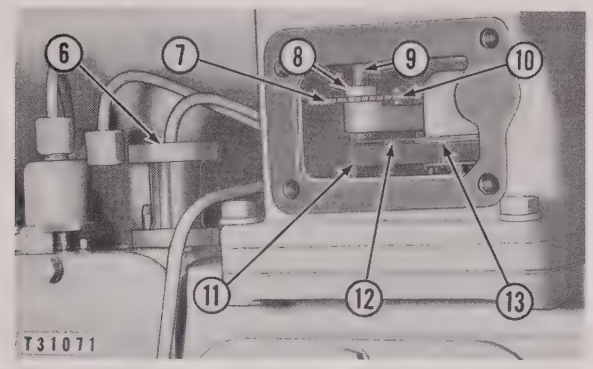

SETTING THE FUEL RACK
6–Fuel rack setting gauge. 7–Lock. 8–Locknut. 9–Adjusting screw. 10–Lock pin. 11–Block. 12–Torque spring. 13–Spacer.

7. When properly adjusted, position the lock with its nearest matching groove over the lock pin and tighten the locknut.

NOTE

See the applicable rack setting chart for correct settings.

8. Remove the thickness gauge and install the remaining parts in the reverse order of removal. See the topic, GOVERNOR SEALS, for sealing the cover.

SERVICE METER

The service meter is located on the side of the fuel pump and governor drive housing and is driven by the diesel engine accessory shaft. It provides an accurate means of determining time periods for lubrication and maintenance.

The drive shaft of the service meter has the end grooved at **(6)** so that a tachometer can be installed after the cover **(7)** has been removed. Engine speed can be checked at this point by using a speed indicator. The drive shaft rotates at one-half engine speed.

1. Remove the retainer assembly **(3)**.
2. The counter retaining spring will come out with the retainer.
3. Remove the counter assembly **(4)**.
4. Slide out the drive shaft **(2)**.
5. After removing the pin, pull the gear with an 8B7547 Puller.
6. Hold the bearing assembly **(1)** and gently tap the housing to remove the bearing assembly.

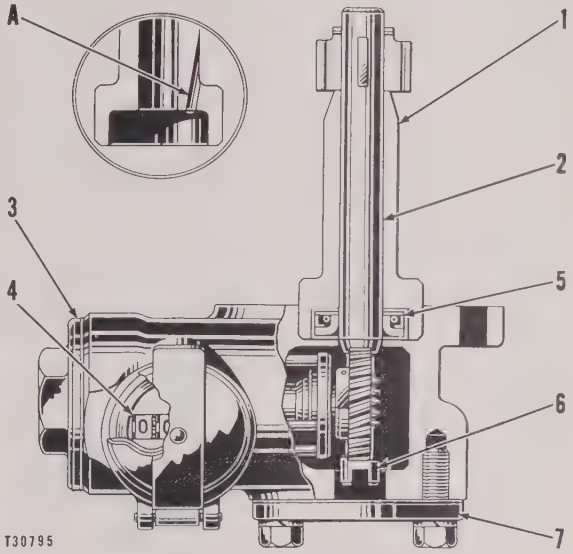

SERVICE METER
1–Bearing assembly. 2–Drive shaft. 3–Retainer assembly. 4–Counter assembly. 5–Oil seal. 6–Grooved end of shaft. 7–Cover. A–Oil return passage.

An oil seal **(5)** keeps oil out of the service meter assembly. If this seal is replaced, the wiping edge should be installed toward the bearing **(1)**. The bearing should be replaced if the clearance exceeds .012". The bearing is lubricated through the holes in the bearing and oil is returned through a drilled passage **(A)** just behind the seal. The drilled passage should be on the bottom when the bearing is installed. When reassembling, place ball and roller bearing lubricant on the counter assembly drive gear. The drive gear and shaft are lubricated by oil from the accessory shaft bearing.

Fuel Pump and Governor Drive

REMOVAL AND INSTALLATION OF FUEL PUMP AND GOVERNOR DRIVE HOUSING

1. Drain the cooling system.

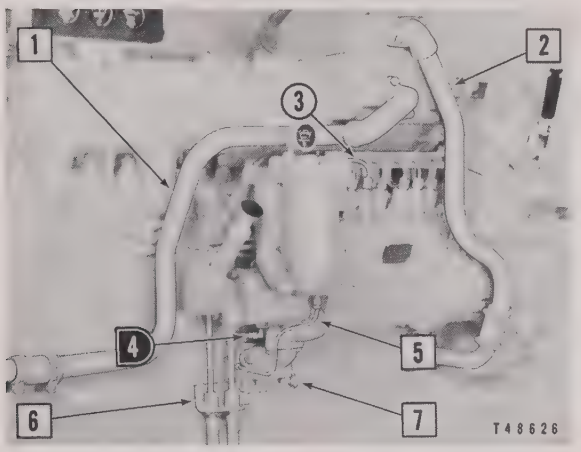

PREPARING TO REMOVE FUEL PUMP AND GOVERNOR DRIVE HOUSING

☐ Remove ◗ Disconnect

1–Water line. 2–Water line. 3–Fuel injection lines (six). 4–Fuel transfer pump drain line. 5–Adapter housing drain line. 6–Fuel lines and bracket assembly. 7–Bolts (four).

2. Remove the fuel lines **(3)**. Cover the openings on the fuel lines, injection valves, and the fuel injection pumps.
3. Remove the cover from the rear side of the fuel pump and governor drive gear **(8)**.
4. Bend the lock and remove the retaining nut from the shaft.

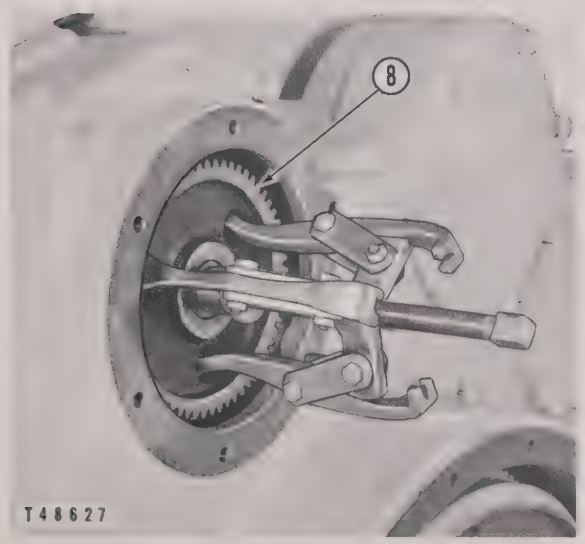

PULLING GEAR FROM SHAFT
8–Fuel pump and governor drive gear.

5. Install the 8H700 Puller as illustrated and pull the gear from the shaft.
6. Remove the key from the shaft.
7. Bend the locks **(9)** and remove the bolts **(10)** and the locks.

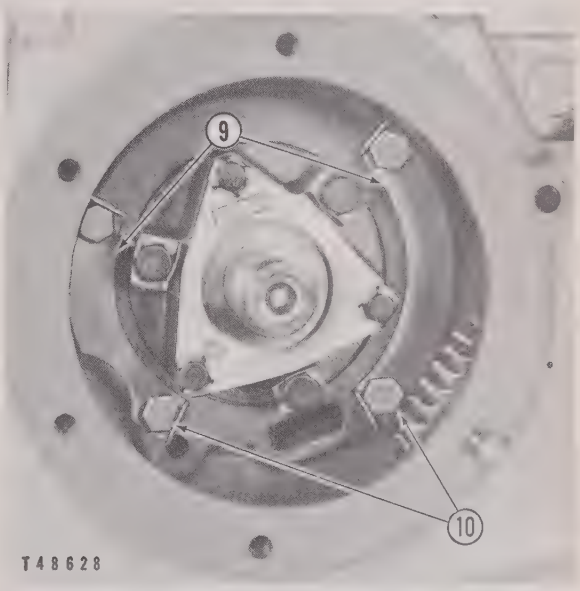

PREPARING TO REMOVE FUEL PUMP AND GOVERNOR DRIVE HOUSING
9–Locks. 10–Bolts.

8. Attach a suitable sling and hoist and support the weight of the assembly.
9. Remove the bolts that secure the fuel pump and governor drive housing **(11)** to the flywheel and timing gear housing **(12)**.
10. Make a final check to determine if all necessary disconnections have been made.

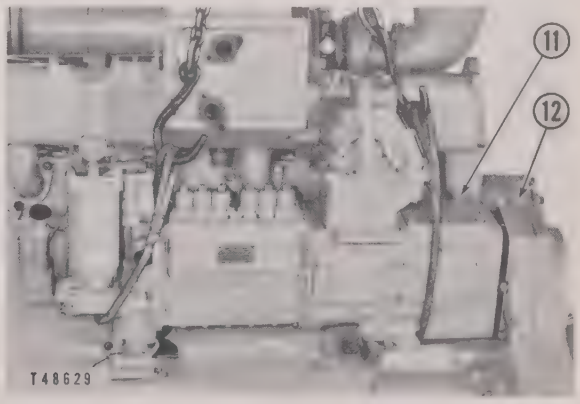

REMOVING FUEL PUMP AND GOVERNOR DRIVE HOUSING
11–Fuel pump and governor drive housing. 12–Flywheel and timing gear housing.

11. Move the entire assembly forward and away from the engine.

12. Install the fuel pump and governor drive housing in the reverse order of removal.

13. See the topic, TIMING THE FUEL INJECTION PUMP CAMSHAFT, for the timing procedure.

DISASSEMBLY AND ASSEMBLY OF FUEL PUMP AND GOVERNOR DRIVE

1. Remove the fuel injection pump housing, governor, service meter and the governor drive pinion. See the covering topics.

2. Remove the shaft **(1)** and the shaft assembly **(4)** from the housing as a unit.

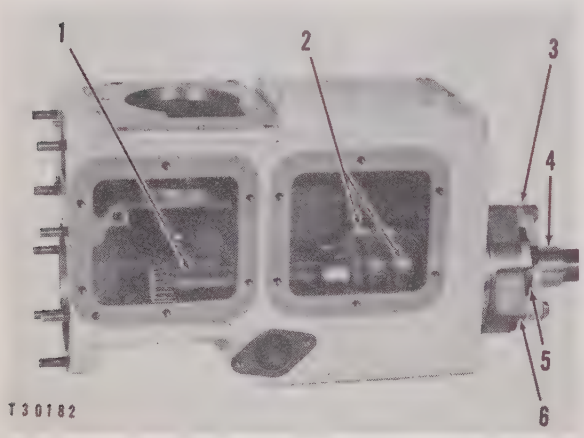

PREPARING TO DISASSEMBLE FUEL PUMP AND GOVERNOR DRIVE
1–Shaft. 2–Bolts. 3–Washer. 4–Shaft assembly. 5–Washer. 6–Cage assembly.

3. Bend the locks and remove the bolts **(2)** that secure the shaft to the shaft assembly. The shafts can then be separated.

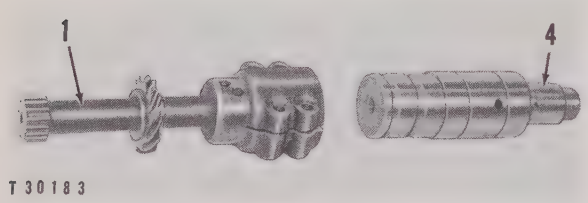

SHAFT AND SHAFT ASSEMBLY SEPARATED
1–Shaft. 4–Shaft assembly.

4. Bend the locks and remove the bolts that secure the washers **(3)** and **(5)** and the cage assembly **(6)** to the housing.

5. Remove the washers and cage assembly.

6. Press the bearings **(7)** and **(8)** from the cage, if they are worn or damaged and install new ones.

7. Install new washers **(3)** and **(5)** if the end clearance of the shaft **(4)** is too great. See the topic, SPECIFICATIONS.

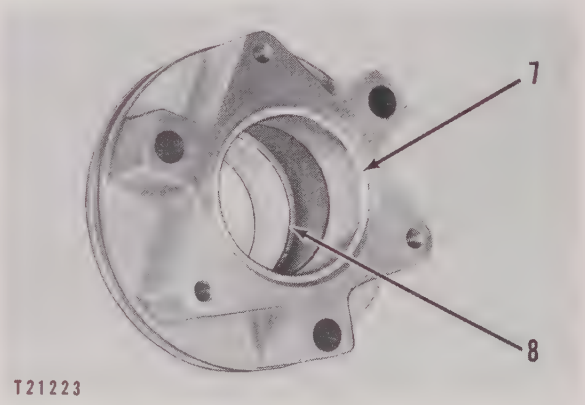

PREPARING TO REMOVE BEARINGS FROM CAGE
7–Bearing. 8–Bearing.

8. Install the cage assembly **(6)** with the oil hole up.

9. Install the shaft **(1)** and shaft assembly **(4)**, leaving the bolts **(2)** loose to permit timing the fuel injection pump camshaft.

10. Complete the assembly in the reverse order of disassembly.

GOVERNOR

A spring and rotating weight governor is located on the left rear of the engine on top of the fuel pump and governor drive housing. The governor control lever is mounted directly on the governor housing.

Rack settings are carefully set at the factory and should not be changed without specific instructions to do so. An incorrectly adjusted fuel rack affects the operation of the turbocharger. See the topic, ALTITUDE OPERATION.

The governor is sealed with wire and aluminum seals. The governor mounting bolts are also sealed and the seal must be broken to remove the governor from the fuel pump and governor drive housing.

Operation and Lubrication

The operator selects a desired engine speed by moving the governor control lever. The governor maintains this speed nearly constant even though the load varies.

The centrifugal force of the governor weights **(10)**, acting through the sleeve assembly **(14)**, bearing

(13) and the cage (12), opposes the force created by the compression on the governor spring (5). These forces always tend to balance. These balanced forces hold the fuel pump rack assembly (15), which controls the amount of fuel delivered to the engine, in such a position to make the engine operate at a constant speed.

When the engine encounters a load, the speed decreases. The centrifugal force of the governor weights decreases; the spring, opposed by a lesser force, moves the rack assembly in a direction which gives the engine more fuel which increases the power. The engine speed will then increase until the force of the governor weights again balances the compression of the governor spring.

This sequence is reversed when the load on the engine is decreased.

The adjustment screw (7) limits the distance the rack assembly can travel. The stop (3) contacts the high idle adjustment screw (1) to control the engine high idle speed.

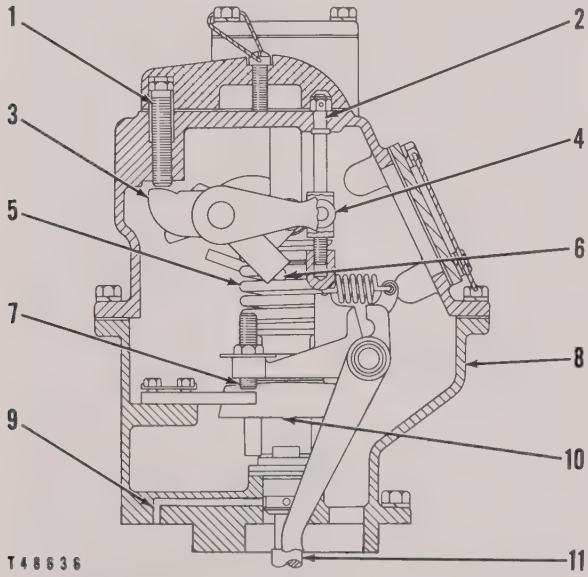

GOVERNOR CROSS SECTION – LEFT SIDE VIEW

1–High idle adjustment screw. 2–Low idle adjustment screw. 3–Stop. 4–Roller. 5–Spring. 6–Plunger. 7–Adjustment screw. 8–Lower housing. 9–Oil passage. 10–Weight. 11–Flexible spindle.

The flexible governor drive spindle assembly (11) provides a cushioned drive for the governor. It consists of a spindle and a shaft joined together by three flat springs. The adjacent ends of the sleeve and collar, which fit over the spindle and shaft respectively, have mating lugs which limit the relative angular movement of the spindle and shaft.

When the governor control lever is moved to the low idle position the plunger (6) contacts the lower portion of the roller (4). As the governor control lever

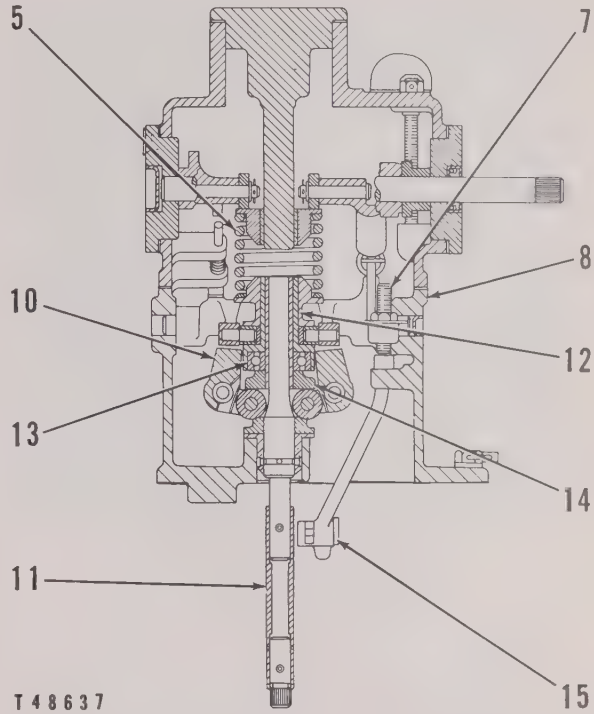

GOVERNOR CROSS SECTION – FRONT VIEW

5–Spring. 7–Adjustment screw. 8–Lower housing. 10–Weight. 11–Flexible spindle. 12–Cage. 13–Bearing. 14–Sleeve assembly. 15–Fuel pump rack assembly.

is moved still further to decrease the engine speed, the plunger (6) compresses the spring, which contacts it, permitting the plunger to move above the roller (4), thus moving the fuel pump rack to the shut-off position to stop the engine.

The governor is lubricated by oil from the engine lubricating system. Oil from a tube in the timing gear compartment supplies oil to a passage in the fuel pump and governor drive housing. The oil is directed through drilled passages to the oil passage (9) in the lower housing (8). The oil then enters a groove and a drilled passage in the flexible spindle (11) and is forced to the upper portion of the spindle where it is released through two cross drilled passages to lubricate the various parts of the governor by splash. The oil falls down upon the governor pinion drive and drains back into the timing gear compartment through an oil return hole at the rear of the fuel pump and governor drive housing.

Governor Seals

The governor idle speed cover (1), the rack adjusting screw cover (3) and the governor mounting bolts are sealed with wire and aluminum seals.

To remove the governor from the housing remove the seal (4).

To adjust the high and low idle speeds the seal (2) must be removed. In order to adjust the rack setting, the seal (5) must be removed.

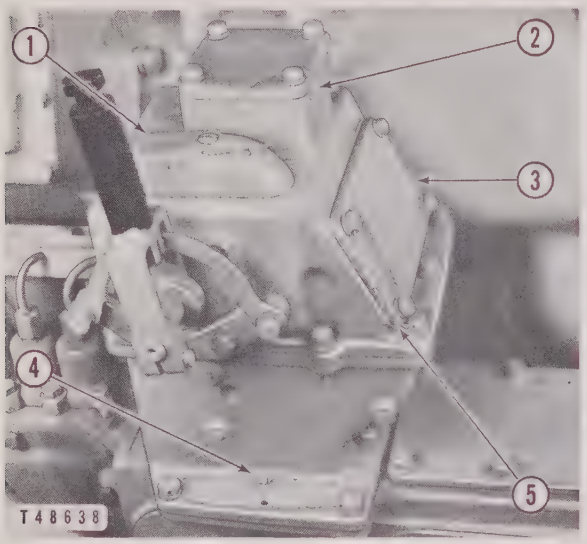

GOVERNOR SEALS
1–Idle speed cover. 2–Seal. 3–Rack adjusting screw cover. 4–Seal. 5–Seal.

Rack settings are carefully set at the factory and should not be changed without specific instructions. An incorrectly adjusted fuel rack affects the operation of the turbocharger. See the topic, ALTITUDE OPERATION.

NOTE

Factory installed seals are identified by the letters CT CO. Dealer's 6H4160 Sealing Tool Assembly will impress the letters DLR on the seals.

Removal and Installation

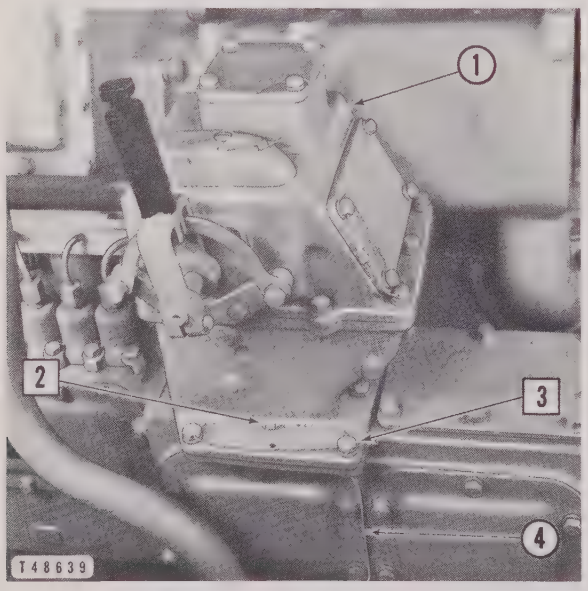

PREPARING TO REMOVE GOVERNOR

☐ Remove

1–Governor. 2–Seal. 3–Bolts (six). 4–Inspection cover.

Remove the inspection cover **(4)** and disconnect the spring-loaded pin **(6)** from the fuel rack link.

Lift the governor **(1)** upward and off the engine carefully so as not to damage the splines on the shaft **(5)** and the governor drive pinion **(7)**.

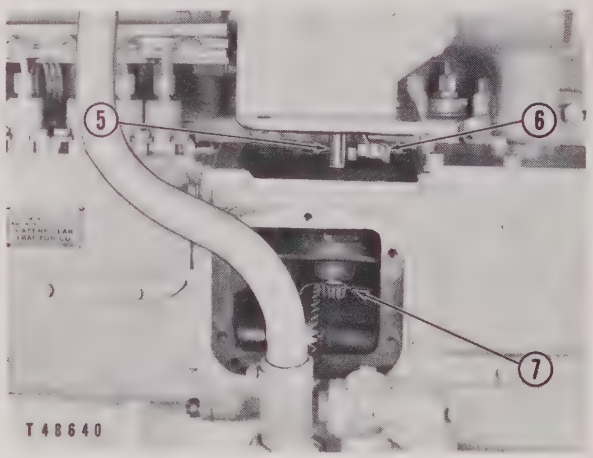

GOVERNOR REMOVAL
5–Shaft. 6–Spring-loaded pin. 7–Governor drive pinion.

Inspect and replace the mounting gasket if necessary and see the topic, GOVERNOR SEALS, for sealing the mounting bolts when installing the governor.

Lower Housing Disassembly and Assembly

1. Separate the lower housing **(3)** from the upper housing **(5)**.

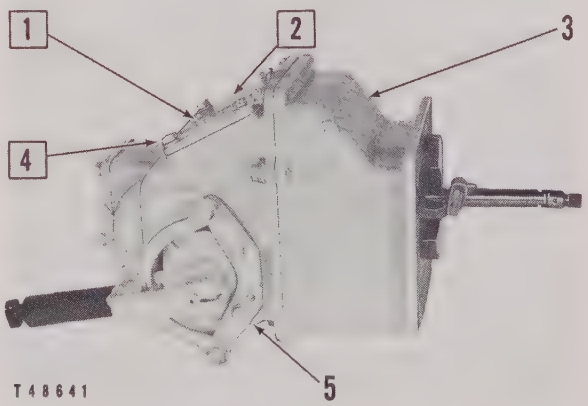

SEPARATING UPPER AND LOWER HOUSINGS

☐ Remove

1–Seal and wire. 2–Cover. 3–Lower housing. 4–Bolts (four). 5–Upper housing.

2. Drive out the lever assembly shaft **(7)** and plug **(6)** as illustrated.

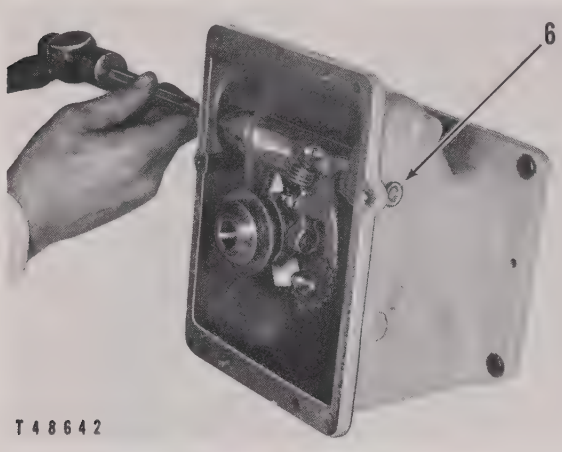

PREPARING TO REMOVE LEVER ASSEMBLIES
6–Plug.

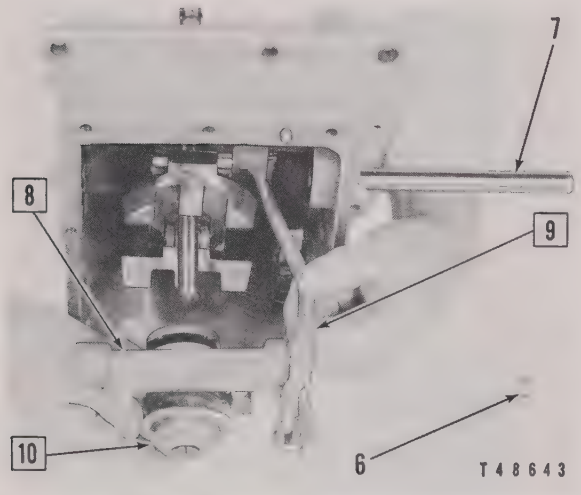

REMOVING CAGE ASSEMBLY AND LEVER ASSEMBLIES

☐ Remove

6–Plug. 7–Shaft. 8–Lever assembly. 9–Lever assembly. 10–Cage assembly.

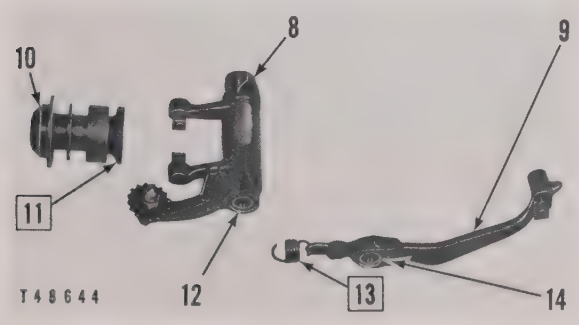

CAGE ASSEMBLY AND LEVER ASSEMBLIES

☐ Remove

8–Lever assembly. 9–Lever assembly. 10–Cage assembly. 11–Sleeve assembly. 12–Bearings (two). 13–Spring. 14–Bearing.

3. Inspect the cage assembly **(10)**, sleeve assembly **(11)** and the bearings **(12)** and **(14)**. Replace if necessary.

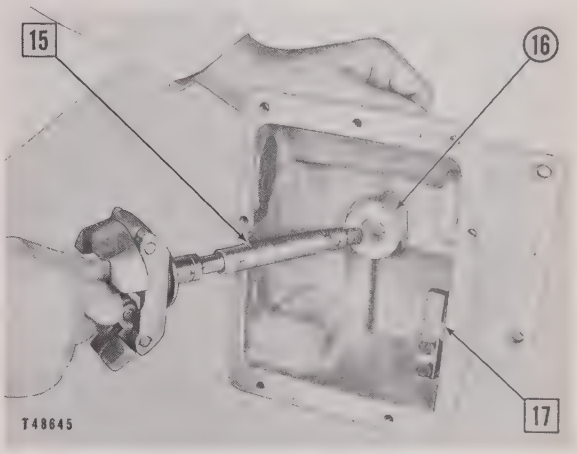

SPINDLE ASSEMBLY REMOVAL

☐ Remove

15–Spindle assembly. 16–Bearing. 17–Torque bar.

4. Inspect the bearing **(16)** and replace if worn or damaged.

Spindle Disassembly and Assembly

1. Drive the dowels **(2)** out of the spindle assembly **(5)** and remove the sleeve **(4)**, the splined shaft **(1)** and springs **(3)**.

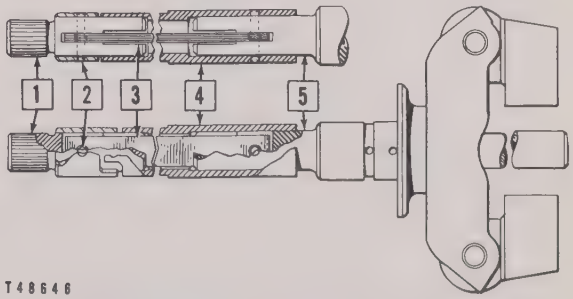

REMOVING SHAFT AND SPRINGS FROM SPINDLE

☐ Remove

1–Shaft. 2–Dowel. 3–Springs. 4–Sleeve. 5–Spindle assembly.

NOTE

When assembling the springs to the spindle and shaft, stake both dowels into position in two places on each end.

2. Press the washer **(6)** from the spindle **(5)** using the 8H663 Bearing Pulling Attachment as illustrated.

3. Press out the pins **(7)** and remove the weights **(8)**.

4. Replace the bearings in the weights if worn or damaged.

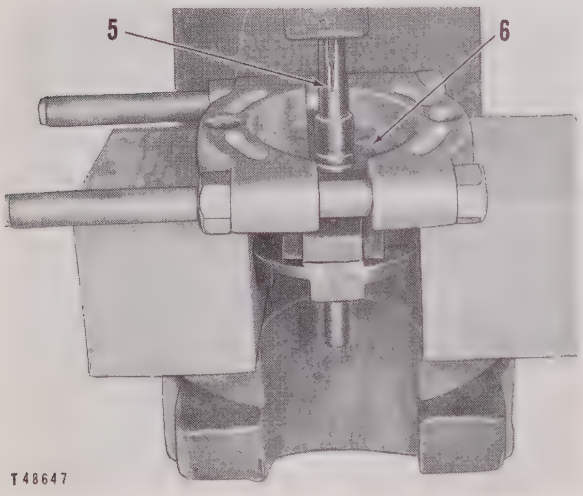

PRESSING WASHER FROM SHAFT
5–Spindle. 6–Washer.

NOTE

A pin in the shaft fits into groove on the inner diameter of the washer to prevent the washer from turning on the shaft. When installing a new washer, be sure the pin and groove are properly aligned.

5. Place the weights into position and press the pins into place.

6. Use a small diameter punch through the holes **(9)** to stake metal which remains at the bottom of the holes into the grooves in the pins **(7)**.

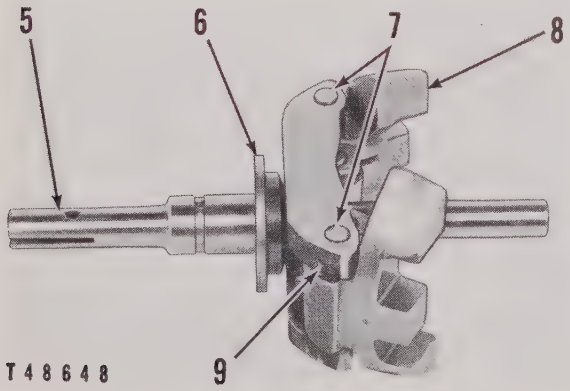

PREPARING TO DISASSEMBLE SPINDLE
5–Spindle. 6–Washer. 7–Pins. 8–Weight. 9–Hole.

NOTE

If the metal is sheared from the bottom of the holes **(9)** when removing the pins, drill a new hole with a 3/32″ drill to a depth sufficient to leave 1/16″ of metal between the bottom of the hole and the pin bore for staking into the pin groove.

Upper Housing Disassembly and Assembly

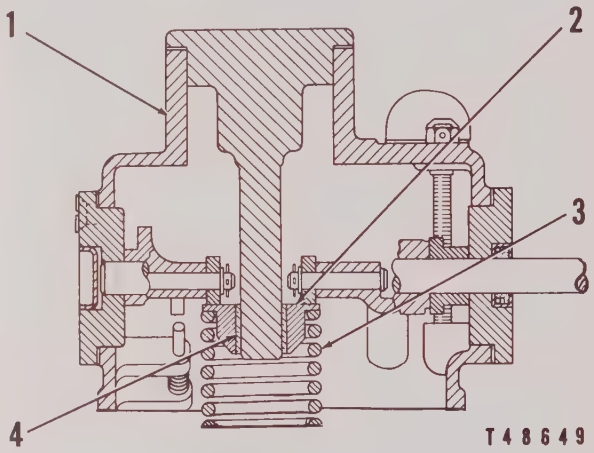

UPPER HOUSING – CROSS SECTION
1–Upper housing. 2–Retainer. 3–Spring. 4–Bearing.

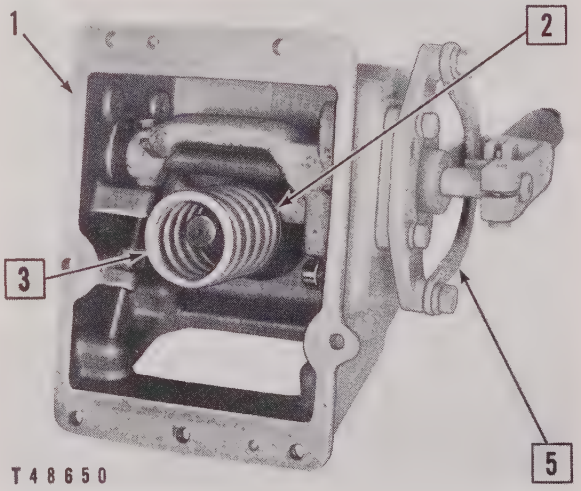

PREPARING TO DISASSEMBLE UPPER HOUSING

☐ **Remove**

1–Upper housing. 2–Retainer. 3–Spring. 5–Governor control.

1. Inspect the bearing **(4)** in the retainer **(2)** and replace if worn or damaged.

2. Remove the shaft **(9)** slowly so the spring **(12)** does not fly out of the lever assembly since the shaft retains the spring and plunger **(11)** in place.

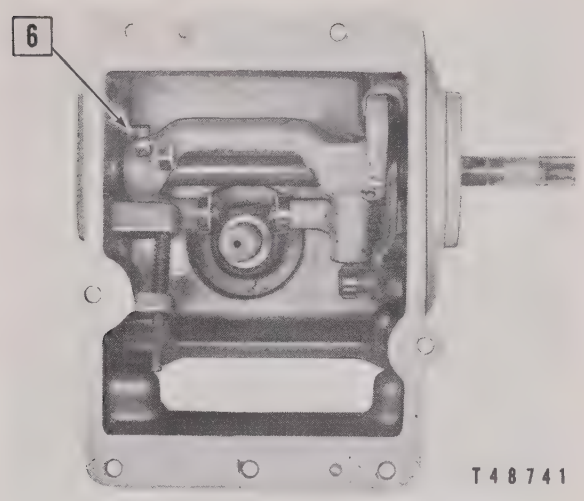

PREPARING TO REMOVE LEVER ASSEMBLIES

☐ Remove

6–Bolt and lock.

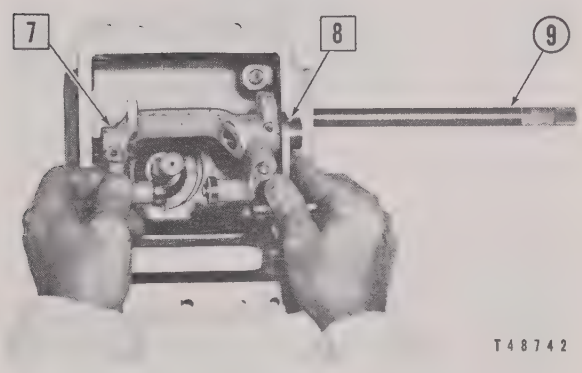

REMOVING LEVER ASSEMBLIES

☐ Remove

7–Lever assembly. 8–Lever assembly. 9–Shaft.

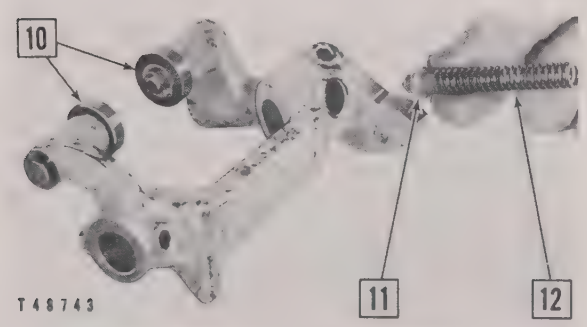

DISASSEMBLY OF LEVER ASSEMBLY

☐ Remove

10–Cotter pins, washers and rollers.
11–Plunger. 12–Spring.

3. Break the seal **(16)** and remove the bolts which secure the cover **(15)** to the housing and remove the cover.

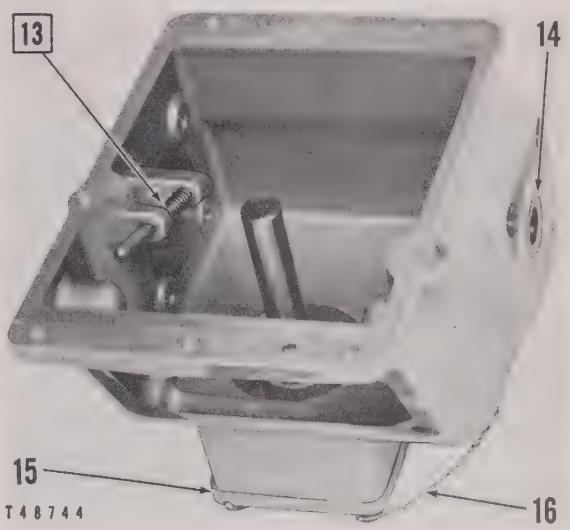

UPPER HOUSING DISASSEMBLY

☐ Remove

13–Snap ring, spring and pin. 14–Seal.
15–Cover. 16–Seal.

4. Inspect the seal **(14)** and replace, if damaged, with the lip of the seal facing the inside of the housing.

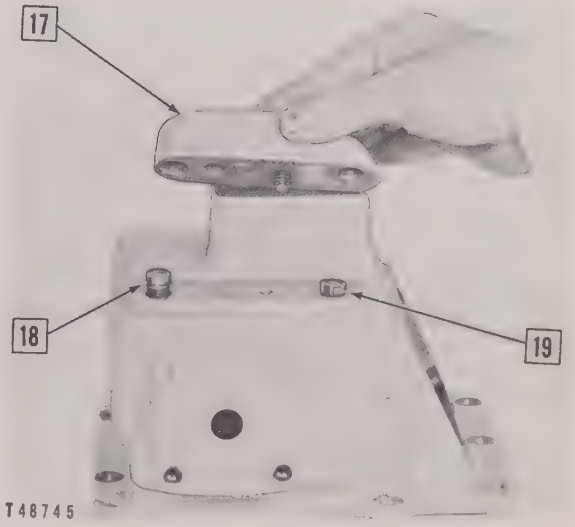

UPPER HOUSING DISASSEMBLY

☐ Remove

17–Cover. 18–High idle adjusting screw.
19–Low idle adjusting screw.

NOTE

The guide on the low idle adjusting screw can be removed from inside the housing while removing the adjusting screw.

Drive Pinion Removal and Installation

1. Remove the governor. See the covering topic.

2. Bend the locks and remove the bolts that secure the cage assembly **(1)** to the housing.

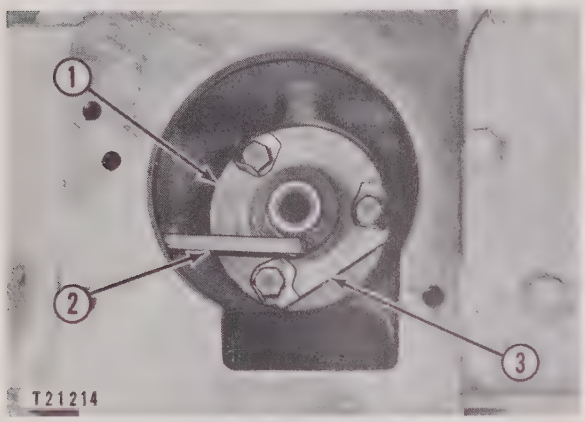

PREPARING TO REMOVE GOVERNOR DRIVE PINION
1–Cage assembly. 2–Fuel rack link. 3–Flat surface on cage assembly.

3. Remove the governor drive pinion assembly by lifting and rotating it slightly to allow the flat surface **(3)** on the cage assembly to clear the fuel rack link **(2)**.

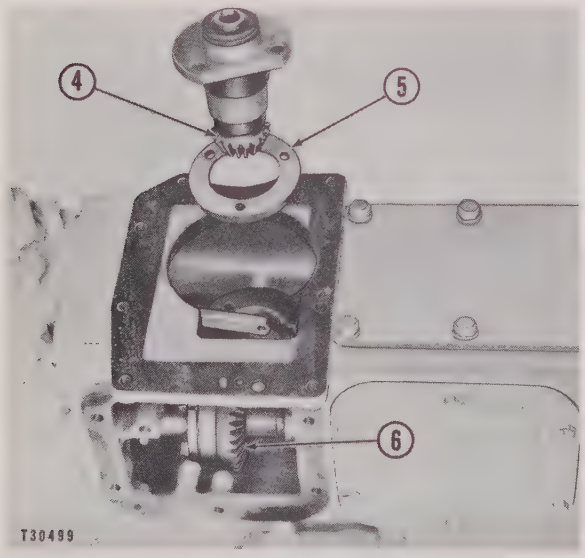

DRIVE PINION AND SHIMS REMOVED
4–Gear. 5–Shim. 6–Gear.

4. Remove the shims **(5)** and the gear **(6)**.
5. At time of installation, install enough shims **(5)** between the cage assembly and the housing to correctly align the gear **(4)** and gear **(6)**.
6. The holes in the shims and cages are not equally spaced, making assembly possible in one position only.
7. Check the backlash between the gears **(4)** and **(6)** with the gear **(6)** pushed toward the front of the engine. See the topic, SPECIFICATIONS, for the correct backlash.
8. Adjust the backlash as necessary by removing or adding shims from in front of the gear **(6)**.

Drive Pinion Disassembly and Assembly

1. Using a suitable spacer, press the pinion **(1)** from the cage assembly **(4)** and remove the washer **(2)**.

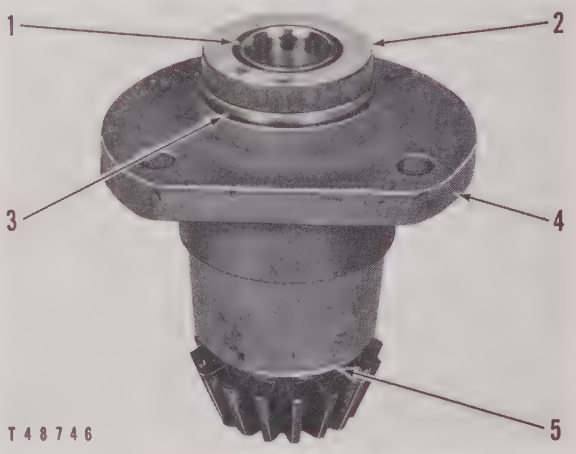

REMOVING THE PINION AND BEARINGS
1–Pinion. 2–Washer. 3–Bearing. 4–Cage assembly. 5–Bearing.

2. Remove the bearings **(3)** and **(5)** from the cage, and replace if worn or damaged.
3. Install the bearings into the cage until they seat tightly on the shoulders of the cage.
4. Install the pinion and press the washer onto the pinion.

NOTE

With the washer pressed tight against the flange of the bearing **(3)**, the cage assembly must have the correct end clearance. See the topic, SPECIFICATIONS.

High and Low Idle Speed

The engine idle speed can be checked at the tachometer drive connection on the service meter. Remove the cap and insert a hand tachometer as shown. The reading observed will be actual engine speed.

Without a tachometer drive connection check the engine idle speed at the service meter by removing the cover and applying the hand tachometer directly to the service meter shaft. The reading observed will be one-half actual engine speed.

The high and low idle speeds can be adjusted by removing the cover **(4)** on the top of the governor and turning the adjusting screws **(1)** and **(3)**. The screw **(1)**, which is nearest the front of the governor,

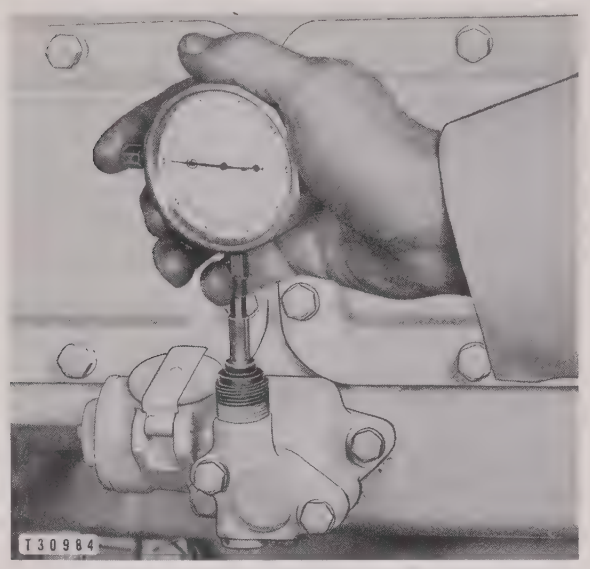

CHECKING ENGINE IDLE SPEED

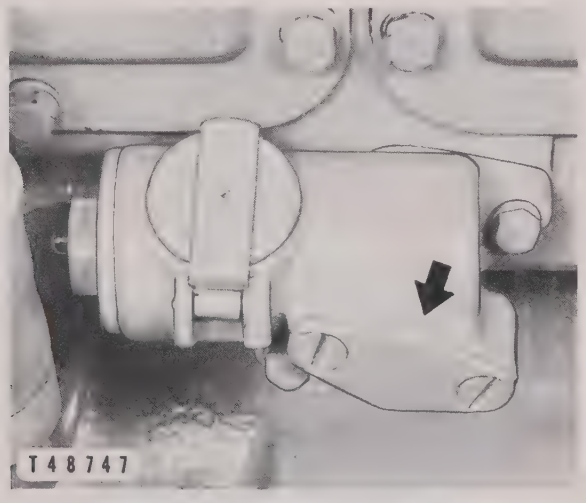

COVER TO BE REMOVED FOR CHECKING ENGINE IDLE SPEED

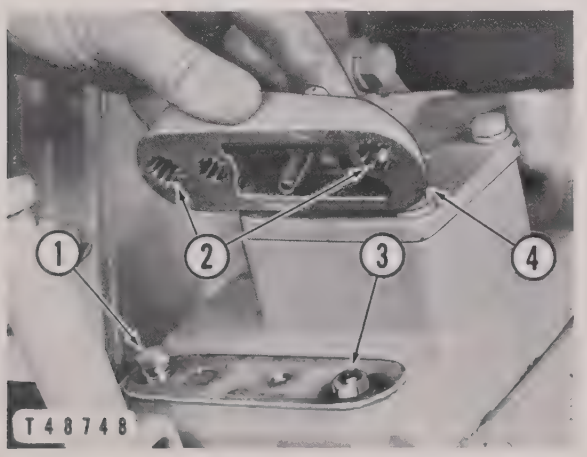

GOVERNOR ADJUSTMENTS
1–Screw. 2–Retainer holes. 3–Screw. 4–Cover.

adjusts the high idle speed and the screw **(3)** adjusts the low idle speed. The holes **(2)**, in the cover **(4)**, are shaped to act as retainers to prevent the screws from turning after the adjustment is made.

To adjust the idle speed settings, remove the cover **(4)** and turn the desired adjusting screw. Turning the adjusting screw in a clockwise direction will decrease the idling speed.

After setting the idle speed, move the governor control lever to change the engine speed. Return it to the desired idle position and recheck the idle speed. Repeat this procedure until the desired idle speeds are obtained.

Fuel Rack Setting

The fuel rack setting can be checked and adjusted with the fuel injection pump housing either removed or installed on the engine.

1. Remove the fuel injection pump **(2)**.
2. Break the seal **(4)** and remove the cover **(5)**, exposing the fuel rack adjusting screw.

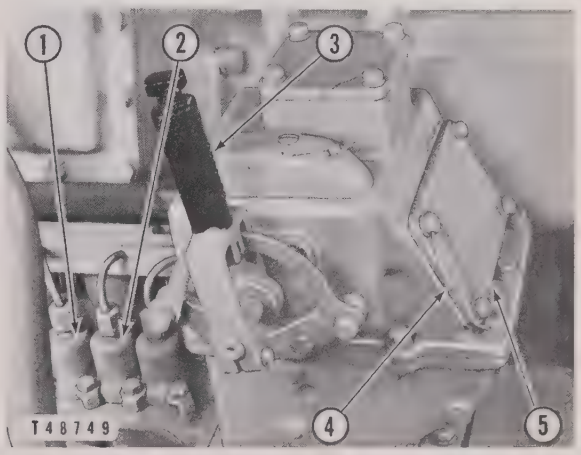

PREPARING TO CHECK FUEL RACK SETTING
1–Fuel injection pump. 2–Fuel injection pump. 3–Governor control lever. 4–Seal. 5–Cover.

3. Install the 3H1690 Fuel Rack Setting Gauge **(6)** on the fuel injection pump housing in the same manner as installing a fuel injection pump.

NOTE

Place the gauge on the dowels with the marked tooth on the gauge aligned with the marked tooth on the fuel rack. Tooth marks are visible through the openings in the gauge dial and body. If the marks are not visible, remove the fuel injection pump **(1)**, and the marks can then be seen through the opening in the fuel injection pump housing.

4. Move the governor control lever **(3)** to the fuel on position.

5. Loosen the locknut **(8)**, raise the lock **(7)** off the lock pin **(10)** and turn the adjusting screw **(9)** clockwise to decrease the rack setting, or counterclockwise to increase the rack setting.

6. Turn the adjusting screw until it just touches the torque bar.

NOTE

If a torque spring and spacers are used, place a thickness gauge the same thickness as the spacer under the torque spring. This will prevent deflection of the spring and an inaccurate reading.

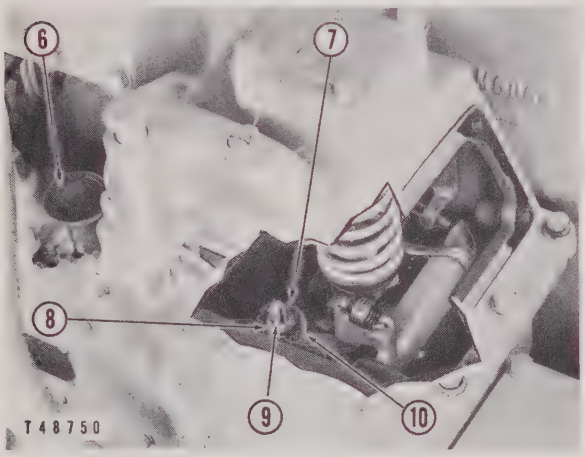

SETTING THE FUEL RACK
6–Fuel rack setting gauge. 7–Lock. 8–Locknut. 9–Adjusting screw. 10–Lock pin.

7. When properly adjusted, position the lock with its nearest matching groove over the lock pin and tighten the locknut.

NOTE

See the applicable rack setting chart for correct settings.

8. Remove the thickness gauge and install the remaining parts in the reverse order of removal. See the topic, GOVERNOR SEALS, for sealing the cover.

SERVICE METER

The service meter is located on the side of the fuel pump and governor drive housing and is driven by the diesel engine accessory shaft. It provides an accurate means of determining time periods for lubrication and maintenance.

The drive shaft of the service meter has the end grooved at **(6)** so that a tachometer can be installed after the cover **(7)** has been removed. Engine speed can be checked at this point by using a speed indicator. The drive shaft rotates at one-half engine speed.

1. Remove the retainer assembly **(3)**.

2. The counter retaining spring will come out with the retainer.

3. Remove the counter assembly **(4)**.

4. Slide out the drive shaft **(2)**.

5. After removing the pin, pull the gear with an 8H695 Puller.

6. Hold the bearings assembly **(1)** and gently tap the housing to remove the bearing assembly.

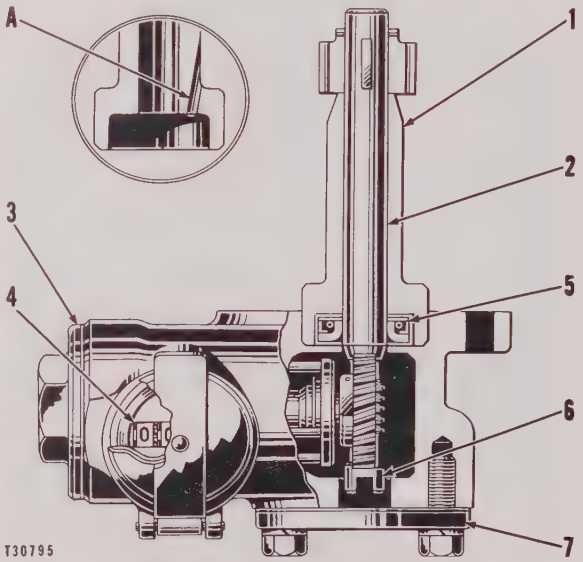

SERVICE METER
1–Bearing assembly. 2–Drive shaft. 3–Retainer assembly. 4–Counter assembly. 5–Oil seal. 6–Grooved end of shaft. 7–Cover. A–Oil return passage.

An oil seal **(5)** keeps oil out of the service meter assembly. If this seal is replaced, the wiping edge should be installed toward the bearing **(1)**. The bearing should be replaced if the clearance exceeds the value given in the topic, SPECIFICATIONS. The bearing is lubricated through the holes in the bearing and oil is returned through a drilled passage **(A)** just behind the seal. The drilled passage should be on the bottom when the bearing is installed. When reassembling, place ball and roller bearing lubricant on the counter assembly drive gear. The drive gear and shaft are lubricated by oil from the accessory shaft bearing.

Governor

A spring and rotating weight governor is located on the left rear of the engine on top of the governor drive housing. It is connected to the carburetor through linkage. The governor regulates the amount of fuel supplied to the engine during engine operation.

The governor spring force attempts to keep the throttle open, while the force generated by the governor weights attempts to close the throttle.

Governor weight force varies with engine speed and spring force is varied according to the governor hand control lever setting.

GOVERNOR SEALS

The governor idle speed cover, inspection cover and the governor mounting bolts are sealed with wire and aluminum seals.

NOTE

Factory installed seals are identified by the letters CT CO. Dealer's 6H4160 Sealing Tool Assembly will impress the letters DLR on the seals.

REMOVAL AND INSTALLATION

See the topic, MAGNETO AND GOVERNOR DRIVE, for removal procedure.

Inspect and replace the mounting gasket if necessary and see the topic, GOVERNOR SEALS, for sealing the mounting bolts when installing the governor.

LOWER HOUSING DISASSEMBLY AND ASSEMBLY

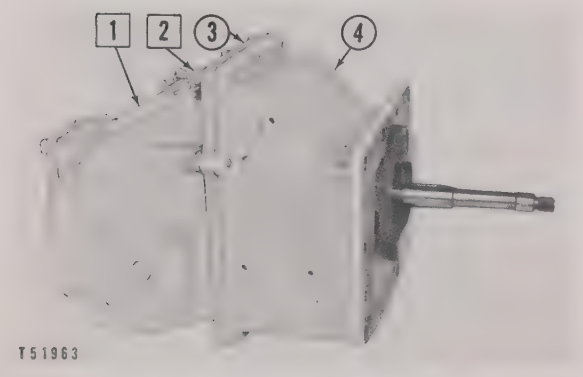

PREPARING TO SEPARATE UPPER AND LOWER GOVERNOR HOUSING ASSEMBLIES

☐ Remove

1–Cover. 2–Bolts (six). 3–Upper housing assembly. 4–Lower housing assembly.

NOTE

The housing assemblies **(3)** and **(4)** are located by the dowels **(7)**.

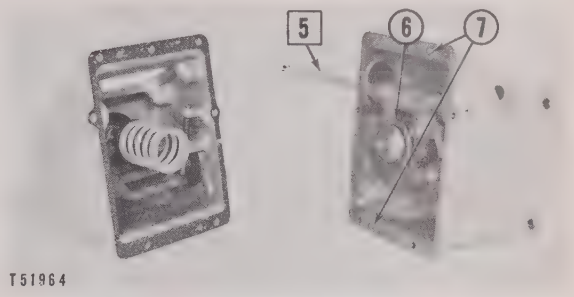

HOUSING ASSEMBLIES SEPARATED

☐ Remove

5–Lever. 6–Cage and sleeve assembly. 7–Dowels.

1. Remove the bolt which secures the lever assembly **(10)** to the shaft **(8)** and remove both.

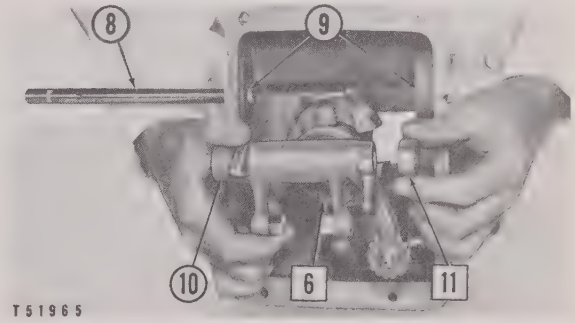

GOVERNOR DISASSEMBLY

☐ Remove

6–Cage and sleeve assembly. 8–Shaft. 9–Bearings (two). 10–Lever assembly. 11–Spacer.

2. Inspect the carburetor control shaft **(8)** and bearings **(9)**. See the topic, SPECIFICATIONS.

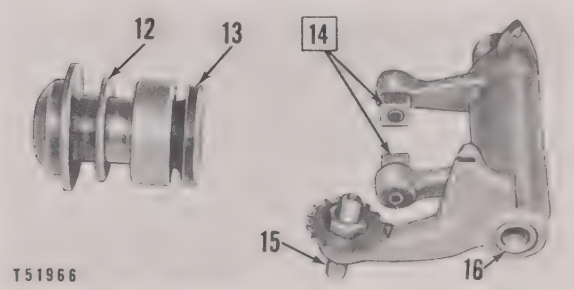

GOVERNOR DISASSEMBLY

☐ Remove

12–Cage assembly. 13–Sleeve assembly. 14–Blocks. 15–Governor full load speed adjusting screw. 16–Bearings (two).

3. Inspect the lever assembly bearings **(16)**. See the topic, SPECIFICATIONS.

NOTE

If the governor full load speed adjusting screw **(15)** is to be removed, it should be marked before removal so it can be installed in the same position.

4. By using a suitable press, the sleeve assembly **(13)** can be removed from the cage assembly **(12)**. Inspect the cage assembly ball bearing.

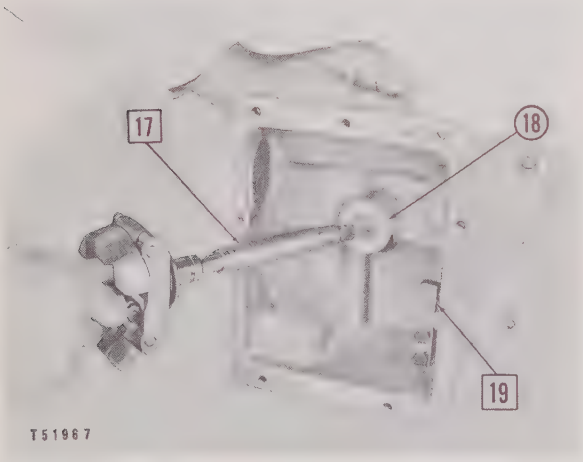

REMOVING SPINDLE ASSEMBLY

☐ **Remove**

17–Spindle assembly. 18–Spindle assembly bearing. 19–Torque bar.

5. Inspect the spindle assembly bearing **(18)**. See the topic, SPECIFICATIONS.

SPINDLE DISASSEMBLY AND ASSEMBLY

1. Drive the dowels **(2)** out of the spindle assembly **(5)** and remove the sleeve **(4)**, the splined shaft **(1)** and springs **(3)**.

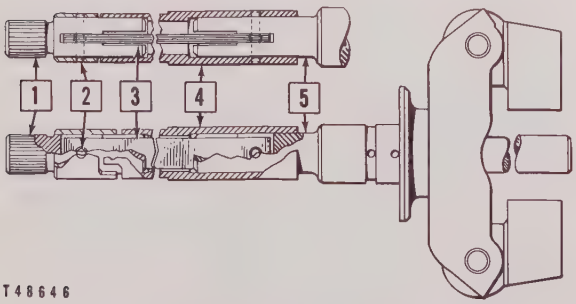

REMOVING SHAFT AND SPRINGS FROM SPINDLE

☐ **Remove**

1–Shaft. 2–Dowel. 3–Springs. 4–Sleeve. 5–Spindle assembly.

NOTE

When assembling the springs to the spindle and shaft, stake both dowels into position in two places on each end.

2. Press the washer **(6)** from the spindle **(5)** using the 8H663 Bearing Pulling Attachment as illustrated.
3. Press out the pins **(7)** and remove the weights **(8)**.
4. Replace the bearings in the weights if worn or damaged.

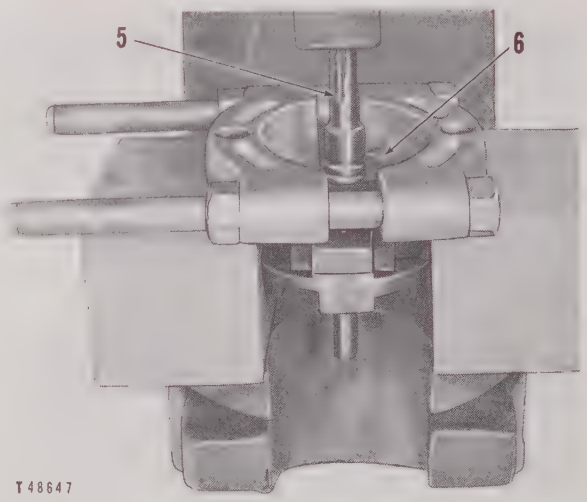

PRESSING WASHER FROM SHAFT
5–Spindle. 6–Washer.

NOTE

A pin in the shaft fits into a groove on the inner diameter of the washer to prevent the washer from turning on the shaft. When installing a new washer, be sure the pin and groove are properly aligned.

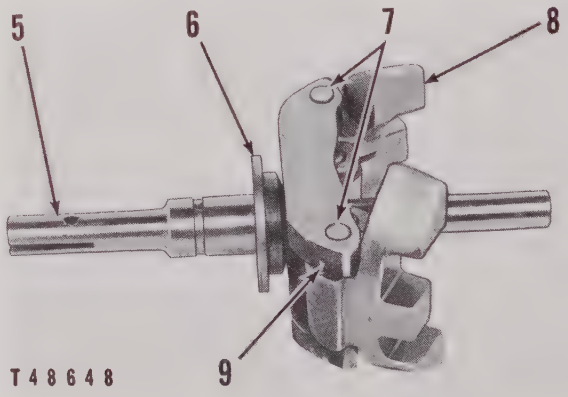

PREPARING TO DISASSEMBLE SPINDLE
5–Spindle. 6–Washer. 7–Pins. 8–Weight. 9–Hole.

5. Place the weights into position and press the pins into place.

6. Use a small diameter punch through the holes **(9)** to stake metal which remains at the bottom of the holes into the grooves in the pins **(7)**.

NOTE

If the metal is sheared from the bottom of the holes **(9)** when removing the pins, drill a new hole with a 3/32" drill to a depth sufficient to leave 1/16" of metal between the bottom of the hole and the pin bore for staking into the pin groove.

UPPER HOUSING DISASSEMBLY AND ASSEMBLY

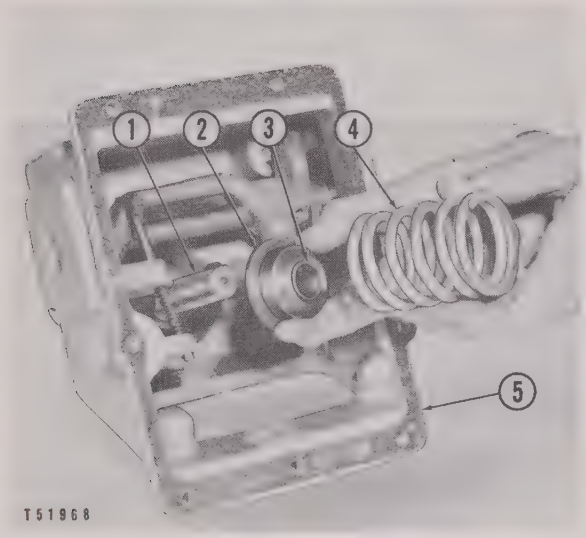

GOVERNOR DISASSEMBLY

1–Shaft. 2–Retainer assembly. 3–Bearing. 4–Spring. 5–Housing.

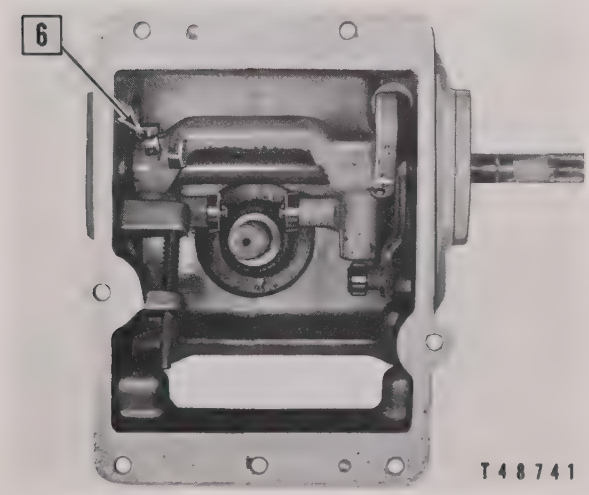

PREPARING TO REMOVE LEVER ASSEMBLIES

☐ **Remove**

6–Bolt and lock.

1. Inspect the shaft **(1)** and retainer bearing **(3)**. See the topic, SPECIFICATIONS.
2. Remove the spring **(4)** and retainer assembly **(2)** from the upper housing **(5)**.

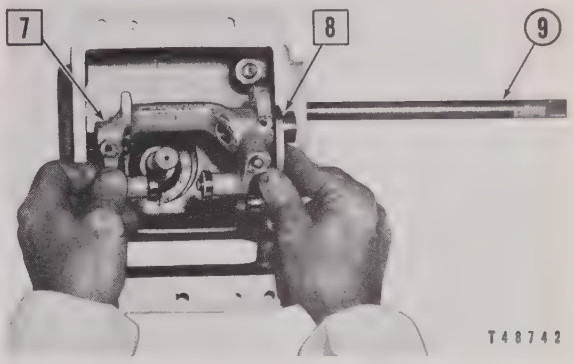

REMOVING LEVER ASSEMBLIES

☐ **Remove**

7–Lever assembly. 8–Lever assembly. 9–Shaft.

3. Remove the shaft **(9)** slowly so the spring **(12)** does not fly out of the lever assembly, since the shaft retains the spring and plunger **(11)** in place.

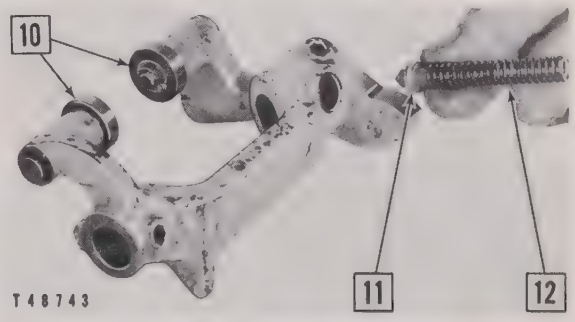

DISASSEMBLY OF LEVER ASSEMBLY

☐ **Remove**

10–Cotter pins, washers and rollers. 11–Plunger. 12–Spring.

4. Break the seal **(16)** and remove the bolts which secure the cover **(15)** to the housing and remove the cover.
5. Inspect the seal **(14)** and replace, if damaged, with the lip of the seal facing the inside of the housing.

NOTE

The guide on the low idle adjusting screw can be removed from inside the housing while removing the adjusting screw.

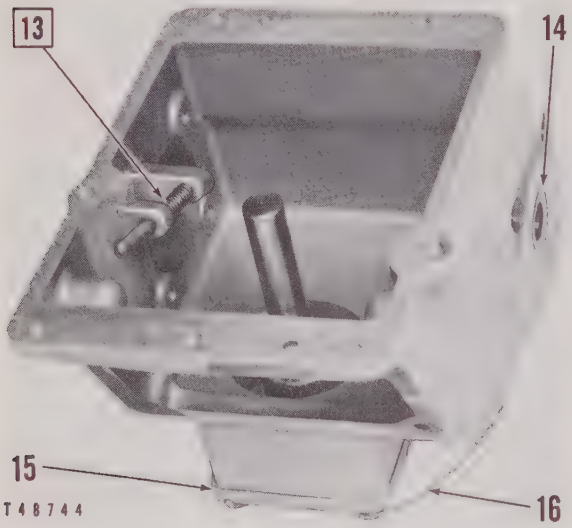

UPPER HOUSING DISASSEMBLY

☐ Remove

13–Snap ring, spring and pin. 14–Seal.
15–Cover. 16–Seal.

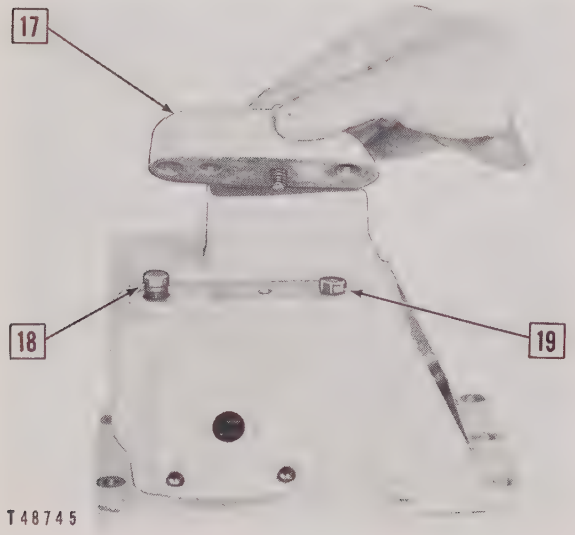

UPPER HOUSING DISASSEMBLY

☐ Remove

17–Cover. 18–High idle adjusting screw.
19–Low idle adjusting screw.

IDLE SPEED ADJUSTMENT

The engine high and low idle speeds can be checked with a hand tachometer as shown. The reading observed will be one-half engine speed.

To adjust the high and low idle speed, remove the cover **(4)** on the top of the governor. The screw **(1)** adjusts the high idle speed and the nut **(3)** adjusts the low idle speed. Turning the adjusting screw or nut in a clockwise direction will decrease the idling speed.

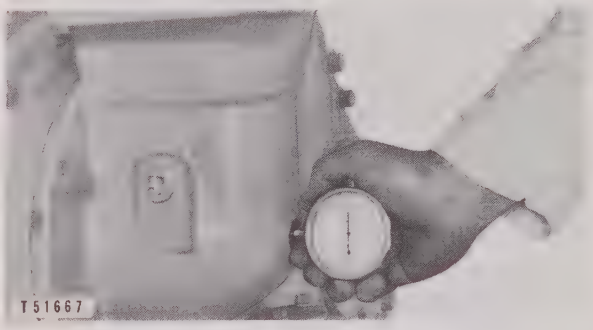

CHECKING ENGINE IDLE SPEED

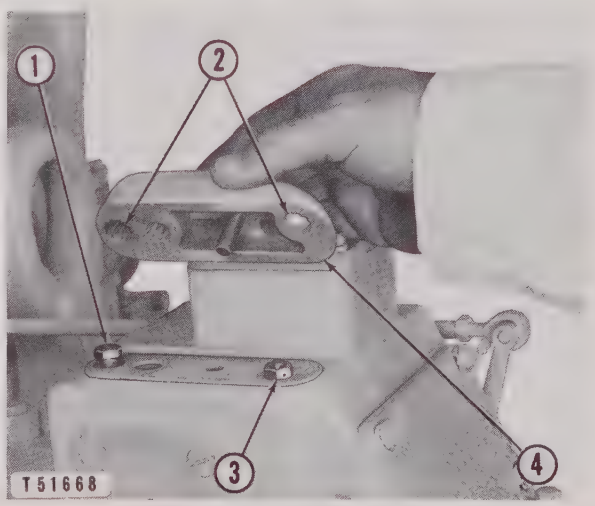

GOVERNOR ADJUSTMENT
1–Screw. 2–Retainer holes. 3–Nut. 4–Cover.

After adjustment, move the governor control lever to change the engine speed. Recheck the idle speed and reset, if necessary.

Magneto and Governor Drive

The magneto and governor drive is the drive assembly used to drive the magneto, governor and service meter.

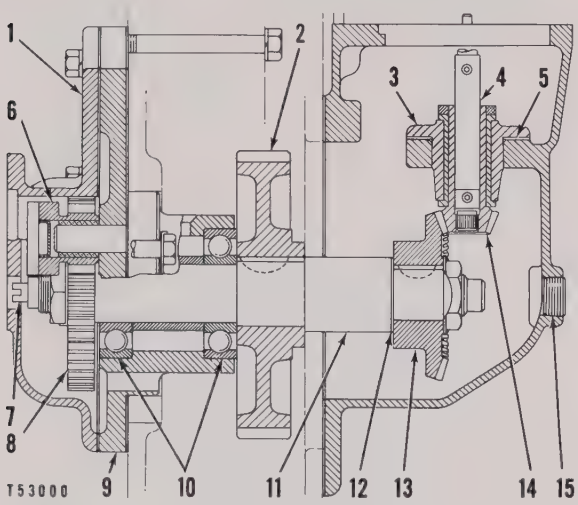

MAGNETO AND GOVERNOR DRIVE CROSS SECTION

1–Magneto drive housing.
2–Gear.
3–Cage assembly.
4–Governor drive spindle assembly.
5–Tooth contact adjustment shims.
6–Magneto gear.
7–Service meter drive dowel.
8–Magneto drive gear.
9–Cage.
10–Ball bearings.
11–Drive shaft.
12–Backlash adjustment shims.
13–Bevel gear.
14–Pinion gear.
15–Opening for hand tachometer.

REMOVAL AND INSTALLATION

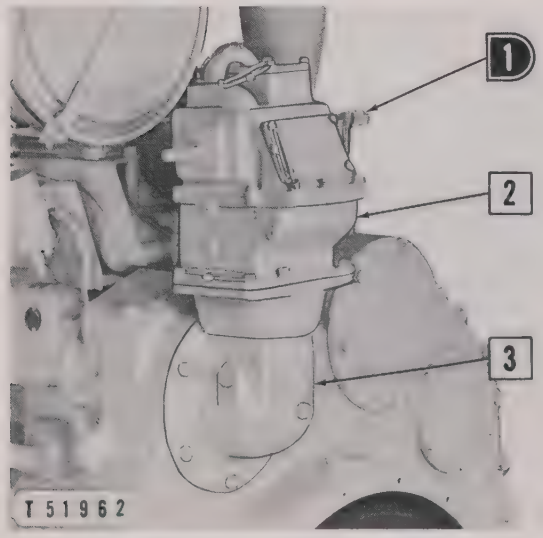

PREPARING TO REMOVE GOVERNOR AND GOVERNOR DRIVE HOUSINGS

☐ Remove ◗ Disconnect

1–Linkage. 2–Governor housing. 3–Governor drive housing.

1. Remove magneto **(4)**. See covering topic.
2. Remove Service Meter. Inspect gasket and seal.

NOTE

Intermediate engines use spacer **(6)** to relocate magneto to permit installation of tachometer drive **(5)**. In later engines, housing **(7)** was changed to include a longer neck, eliminating the need for the spacer.

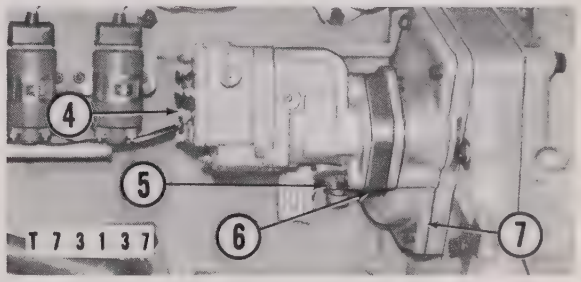

MAGNETO DRIVE
(Intermediate Engine Illustrated)

☐ Remove

4–Magneto. 5–Tachometer drive. 6–Spacer. 7–Housing.

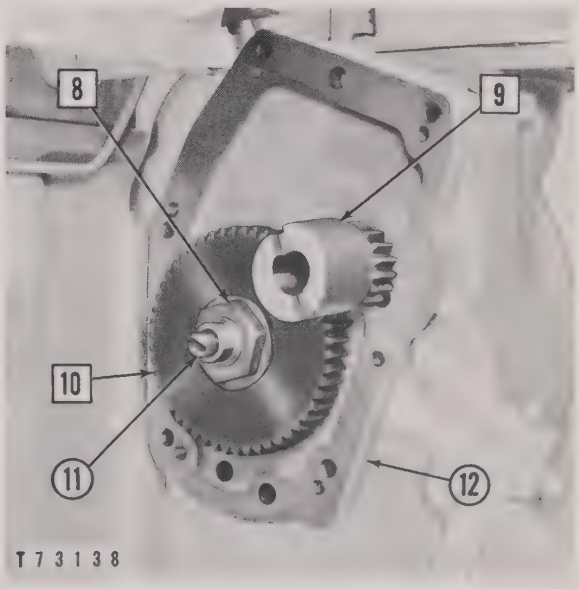

REMOVING MAGNETO DRIVE GEAR
(Later Type Illustrated)

☐ Remove

8–Nut. 9–Magneto drive. 10–Magneto drive gear. 11–Drive shaft. 12–Cage.

3. The cage **(12)** can be removed after magneto drive **(9)** has been removed.
4. Remove the key which holds gear **(10)** in position on shaft **(11)**.
5. Slide the drive shaft **(11)** out of the bearings and spacer **(13)** as shown.

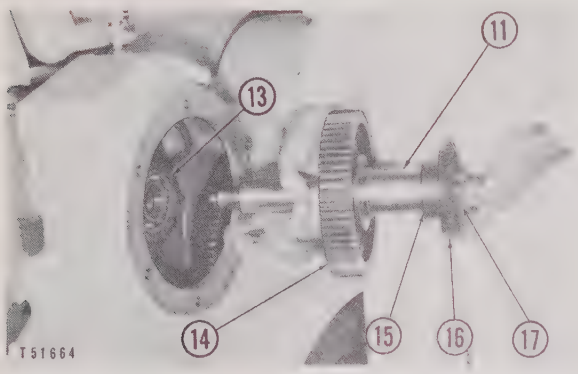

REMOVING DRIVE SHAFT
11–Drive shaft. 13–Bearings and spacer. 14–Gear. 15–Shims. 16–Bevel gear. 17–Nut and lock.

6. Remove the nut and lock **(17)** and, using a suitable puller, remove the bevel gear **(16)**. Remove the key which positions the bevel gear on the drive shaft, and the shims **(15)**.
7. Using a suitable press, remove the gear **(14)** and the key which positions the gear.
8. The shims **(15)** adjust the amount of backlash between the bevel gear and governor drive pinion. For instructions on proper backlash adjustment, see the topic, TOOTH CONTACT AND BACKLASH ADJUSTMENT.
9. Check and replace, if necessary, all gaskets, and seals and install in reverse order of removal.

GOVERNOR DRIVE PINION

Removal and Installation

Remove the governor and governor drive housing as described in the covering topic.

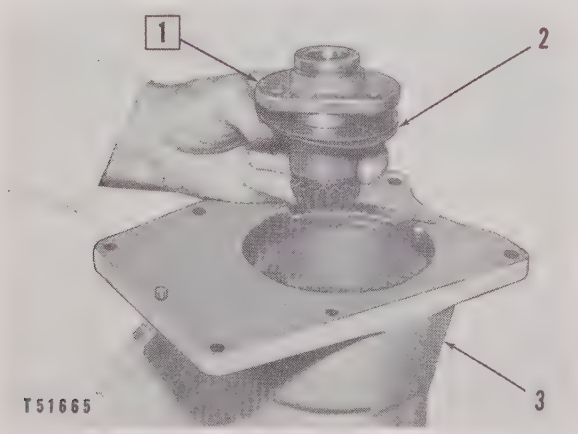

REMOVING GOVERNOR DRIVE PINION
☐ Remove
1–Pinion cage assembly. 2–Shims. 3–Governor drive housing.

Remove the three bolts securing the pinion cage **(1)** to the governor drive housing **(3)**, and remove the pinion cage as shown.

At the time of installation, install enough shims **(2)** to provide the correct tooth contact. See the topic, TOOTH CONTACT AND BACKLASH ADJUSTMENT.

Disassembly and Assembly

1. Using a suitable spacer, press the pinion **(1)** from the cage assembly **(4)** and remove the washer **(2)**.

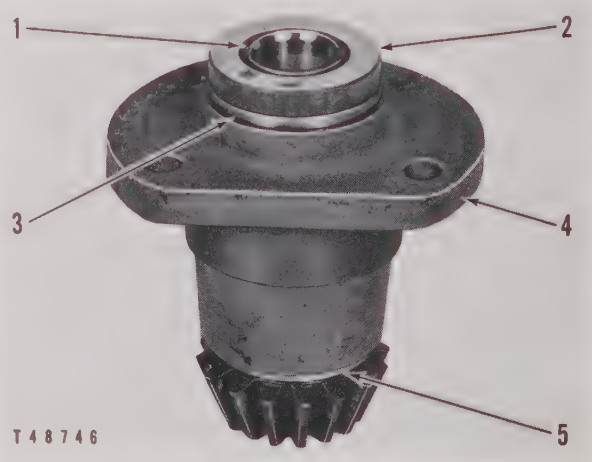

REMOVING PINION AND BEARINGS
1–Pinion. 2–Washer. 3–Bearing. 4–Cage assembly. 5–Bearing.

2. Inspect the bearings **(3)** and **(5)** for wear and damage. See the topic, SPECIFICATIONS.
3. Install a new cage assembly if the bearings are unfit for further use.
4. Install the pinion and press the washer onto the pinion.

NOTE

With the washer pressed tight against the flange of the bearing **(3)**, the cage assembly must have .002″ to .006″ end clearance.

Tooth Contact and Backlash Adjustment

The proper tooth contact between the pinion gear **(4)** and the bevel gear **(1)** exists when the heels of the gears are aligned. Proper tooth contact is achieved by placing the correct amount of shims **(2)** under the pinion flange.

Place shims **(3)** between the drive shaft and the bevel gear **(1)** to provide the proper amount of backlash. See the topic, SPECIFICATIONS, for correct backlash.

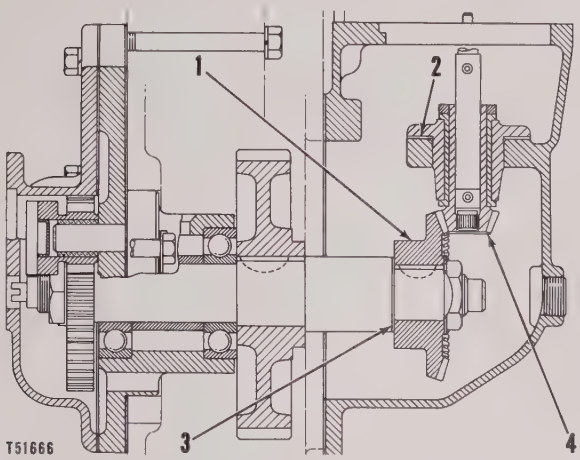

MAGNETO AND GOVERNOR DRIVE
1–Bevel gear. 2–Shims. 3–Shims. 4–Pinion gear.

SERVICE METER

The service meter is located on the magneto drive housing, and is driven by the magneto and governor drive shaft. It provides a means of determining time periods for lubrication and maintenance.

A slotted dowel at the end of the magneto and governor drive shaft drives the service meter. A tachometer drive group can be installed between the service meter and the magneto drive housing. Speed checked at this point will be one-half engine speed.

To remove the service meter, remove the bolts which secure the service meter to the magneto drive housing. Replace the gasket if necessary.

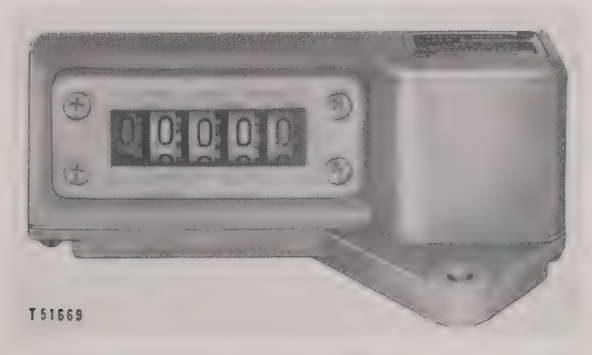

SERVICE METER

INTRODUCTION

A line pressure regulator is required on turbocharged and aftercooled engines. In addition, naturally aspirated engines with a gas supply pressure exceeding the inlet pressure differential between the gas and air must use a regulator.

OPERATION

Gas flows through inlet **(12)** (Fig.1), orifice **(6)**, past valve disc **(5)** and through outlet **(4)**. Lower chamber **(8)** senses outlet pressure.

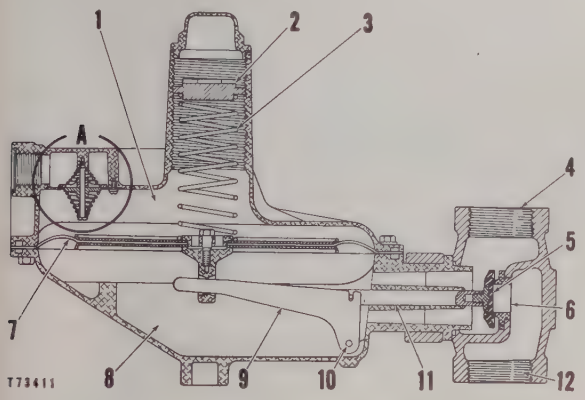

FIG. 1. REGULATOR OPERATION
1–Upper chamber. 2–Adjusting screw. 3–Spring. 4–Outlet. 5–Valve disc. 6–Orifice. 7–Diaphragm assembly. 8–Lower chamber. 9–Lever. 10–Pin. 11–Valve stem. 12–Inlet. A–Vent valve.

As gas pressure in lower chamber increases to a value higher than the force of spring **(3)** and air pressure in upper chamber **(1)** (atmosphere on naturally aspirated engines and turbocharger boost on turbocharged engines), diaphragm assembly **(7)** is forced upward. This pivots lever **(9)** about pin **(10)** and causes valve stem **(11)** to move valve disc **(5)** to close inlet orifice **(6)**.

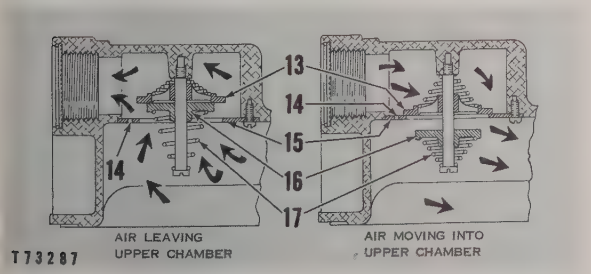

FIG. 2. DETAIL A—VENT VALVE OPERATION
13–Upper flapper. 14–Orifice. 15–Orifice plate. 16–Lower flapper. 17–Springs (two).

As diaphragm assembly **(7)** is forced upward, air is expelled from the upper chamber (Fig. 2). This movement of air forces lower flapper **(16)** upward, carrying upper flapper **(13)** with it. The trapped air is permitted to escape. This is accomplished quickly enough to prevent any lag in the main diaphragm assembly movement due to air compression.

With orifice **(6)** closed (Fig. 1), gas is pulled from lower chamber **(8)** through outlet **(4)**. This reduces the pressure in the lower chamber. As this pressure becomes less than that in the upper chamber, spring **(3)** and the air pressure in the upper chamber forces diaphragm assembly downward. This opens orifice **(6)** and allows additional gas flow to the regulator.

As diaphragm assembly **(7)** moves downward, air rushes inward to fill the partial vacuum created in the upper chamber (Fig. 2). This forces upper flapper **(13)** down against orifice plate **(15)**. Air going through webs in upper flapper opens lower flapper **(16)** and fills upper chamber.

When the pressures above and below the diaphragm assembly are equal, the regulator supplies gas to the carburetor at a constant pressure differential above the incoming air. Orifice **(14)** allows passage of air when pressure changes on either side of diaphragm assembly are not sufficient to overcome spring **(17)**. The regulator is adjusted by turning adjusting screw **(2)**. See the topic, AIR INDUCTION AND EXHAUST SYSTEM.

DISASSEMBLY AND ASSEMBLY

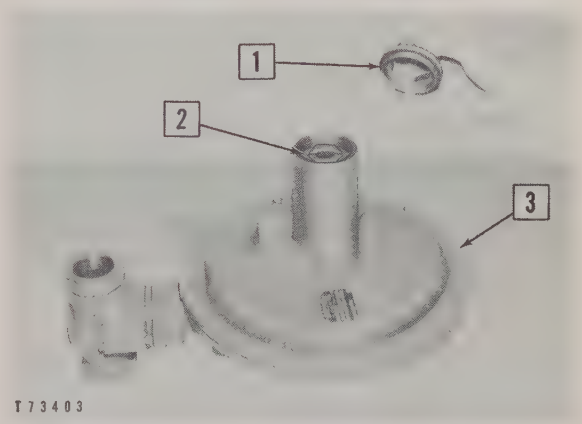

PREPARING TO DISASSEMBLE REGULATOR
1–Cap. 2–Adjusting screw. 3–Spring casing.

NOTE

Later regulators use a solid adjusting screw **(2)** (that is, no center hole).

NOTE

Later regulators have two plates **(6)**, one on each side of diaphragm **(4)**.

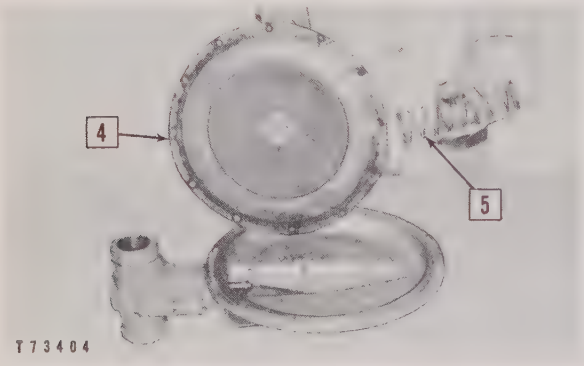

REMOVING DIAPHRAGM
4–Diaphragm. 5–Spring.

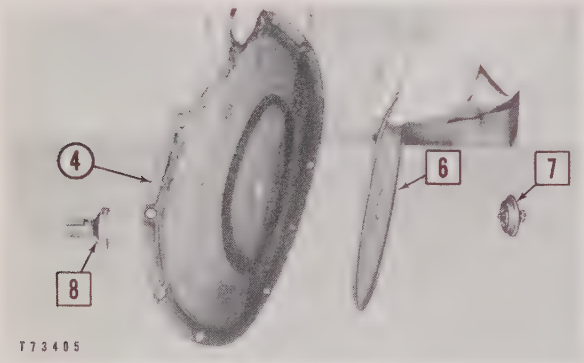

DISASSEMBLING DIAPHRAGM
4–Diaphragm. 6–Plate. 7–Spring seat and bolt. 8–Post.

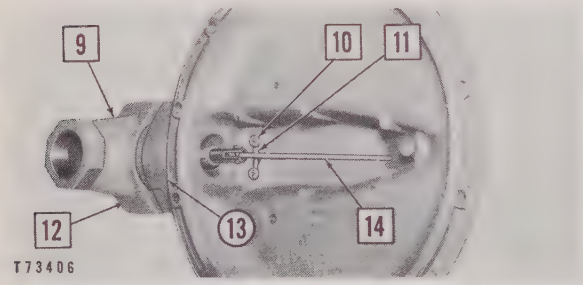

DISASSEMBLING DIAPHRAGM CASING
9–Valve body. 10–Screws (two). 11–Pin. 12–Bolts (two).
13–Rotating flange. 14–Lever.

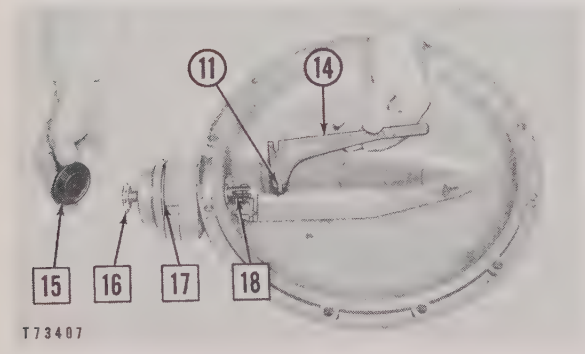

DISASSEMBLING DIAPHRAGM CASING
11–Pin. 14–Lever. 15–Valve disc. 16–Valve disc holder.
17–Seal. 18–Valve stem.

NOTE

During assembly, the casing can be rotated to any position relative to valve body **(9)**. Install bolts **(12)** through valve body into rotating flange **(13)**. Position casing and tighten bolts.

NOTE

Valve disc holder **(16)** is threaded into valve stem **(18)**.

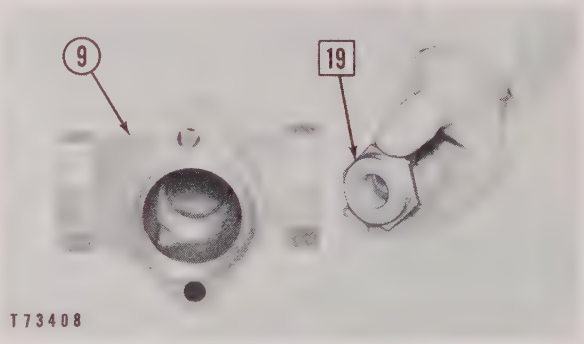

REMOVING ORIFICE
9–Valve body. 19–Orifice.

NOTE

Orifice **(19)** and valve disc **(15)** can be replaced without removing valve body **(9)** from the line or breaking any pipe connections.

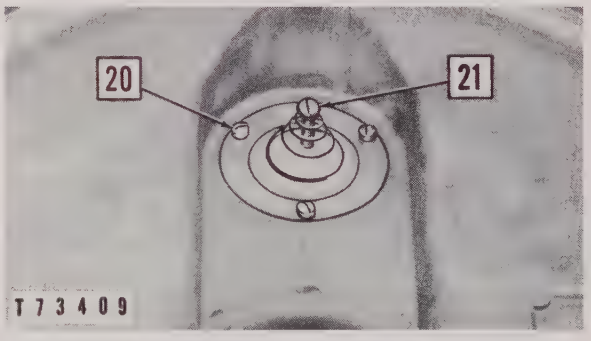

DISASSEMBLING SPRING CASING
20–Screws (three). 21–Screw.

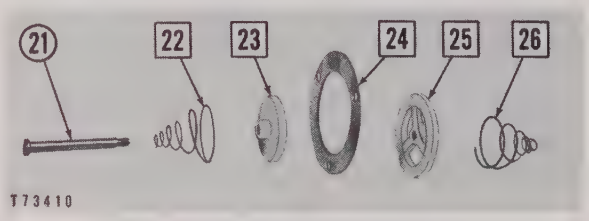

DISASSEMBLING VENT VALVE
21–Screw. 22–Spring. 23–Lower flapper. 24–Orifice plate.
25–Upper flapper. 26–Spring.

Inspect all parts.

Air Induction and Exhaust System

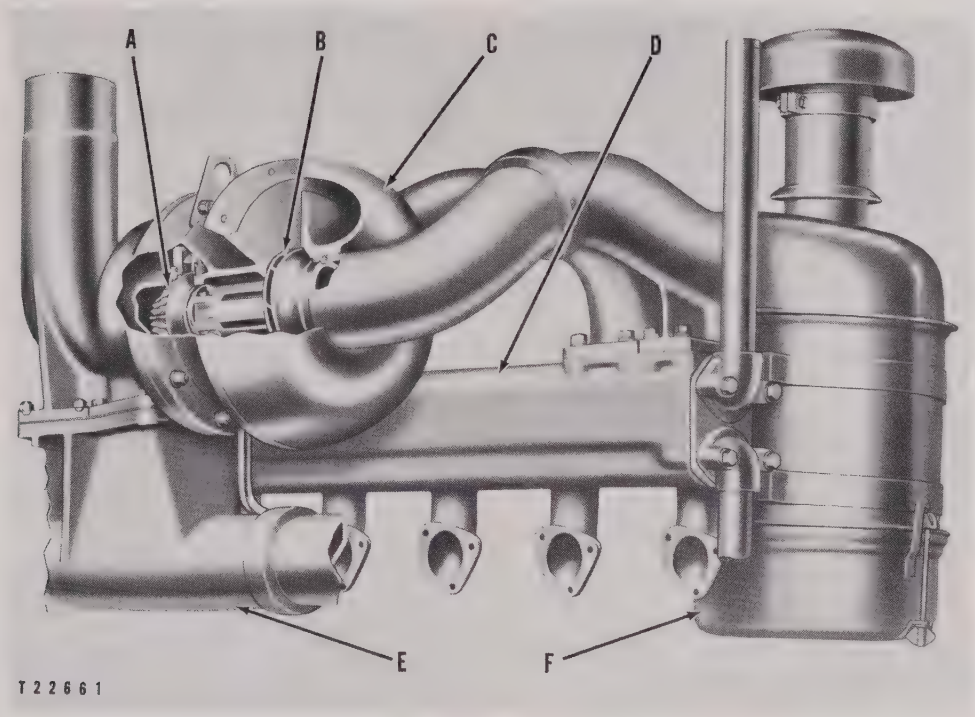

CUTAWAY VIEW
A–Turbine wheel. B–Impeller. C–Turbocharger. D–Inlet manifold. E–Exhaust manifold. F–Air cleaner.

OPERATION

This engine incorporates the use of an exhaust gas driven turbocharger. Energy which ordinarily would be lost from the diesel engine exhaust gases is used to drive the turbocharger.

As the diesel engine starts, the flow of exhaust gases from the diesel engine exhaust manifold **(1)** is directed to the turbine wheel **(6)** through vanes on the nozzle. Since the turbine wheel and impeller **(5)** are mounted on a common shaft, the exhaust gases pass over the turbine wheel forcing it to rotate and in turn the impeller to rotate. The exhaust gases pass out the turbocharger exhaust elbow **(7)** and out the exhaust stack. Incoming air from the air cleaner enters the center of the impeller through the elbow **(4)**. The rotating impeller compresses the air and forces it into the inlet manifold **(2)** and on to the engine cylinder **(3)**.

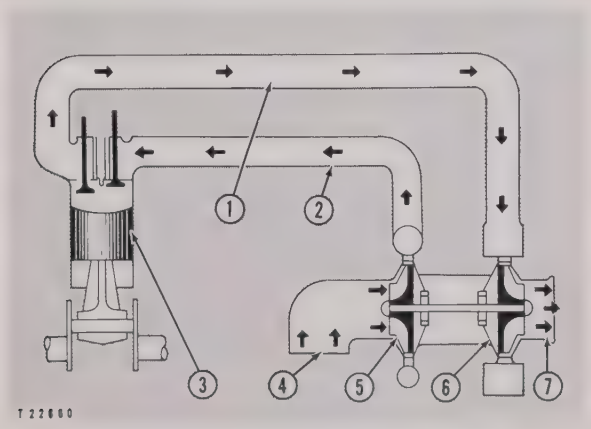

AIR INDUCTION AND EXHAUST SYSTEM
1–Exhaust manifold. 2–Inlet manifold. 3–Engine cylinder. 4–Elbow. 5–Impeller. 6–Turbine wheel. 7–Turbocharger exhaust elbow.

Speed of the rotating parts increases as the engine load increases. Increasing turbocharger speed increases the flow of air into the engine.

INLET MANIFOLD

The inlet manifold **(3)** is located on the left side of the engine and has a three-bolt flange at each cylinder port **(6)**. To aid in initial starting of the diesel engine, the inlet manifold has a two-pass inlet air heater tube assembly **(7)** passing through it. The exhaust gases leaving the starting engine exhaust tube **(5)** enter at the front and pass through the tube assembly heating the incoming air from the turbocharger pipe **(2)** and then pass out the front of the manifold to the starting engine exhaust pipe **(1)**.

The tube assembly is supported at the rear by a cover assembly **(4)** which has a sliding pin arrangement which permits the tube to expand and contract when heating and cooling. The pin angles downward to compensate for the greater expansion of the lower tube.

The pipe and elbow between the inlet manifold and turbocharger incorporates a double O-ring seal arrangement so there are no solid connections between the turbocharger and the inlet manifold.

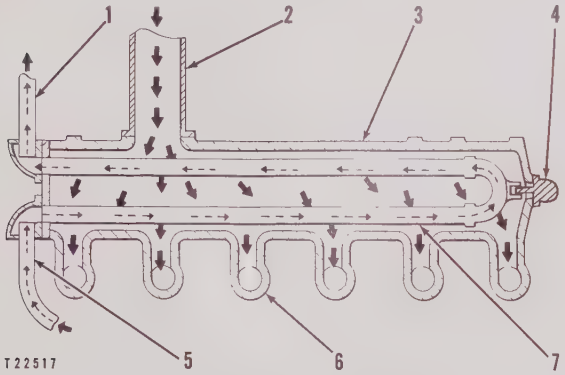

DIESEL ENGINE INLET MANIFOLD (CROSS-SECTION)
1–Exhaust pipe. 2–Turbocharger pipe. 3–Inlet manifold. 4–Cover assembly. 5–Exhaust tube. 6–Cylinder port. 7–Air heater tube assembly.

Removal and Installation

1. Disconnect the control panel bracket **(7)**.
2. Remove the elbow **(2)**, the air cleaner **(1)** and the starting engine exhaust tube **(5)**.

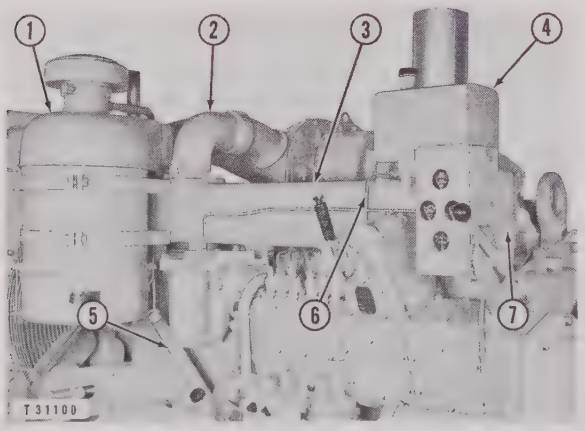

INLET MANIFOLD REMOVAL AND INSTALLATION
1–Air cleaner. 2–Elbow. 3–Inlet manifold. 4–Fuel tank. 5–Starting engine exhaust tube. 6–Fuel line. 7–Control panel bracket.

3. Remove the fuel line **(6)** and fuel tank **(4)**.
4. Attach a suitable hoist and remove the bolts from the manifold flanges.
5. Remove the inlet manifold **(3)**.
6. Install in the reverse order of removal, replacing worn or damaged gaskets.

Disassembly and Assembly

1. Remove the cover assembly **(3)**. This cover assembly pilots into the end of the tube assembly **(4)**.
2. Remove the starting engine exhaust pipe **(1)**.
3. Remove the tube assembly from the inlet manifold **(2)**.
4. Assemble in the reverse roder of disassembly, replacing all worn or damaged gaskets.

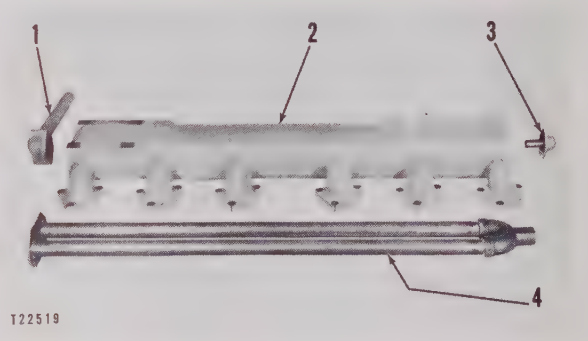

INLET MANIFOLD ASSEMBLY
1–Starting engine exhaust pipe. 2–Inlet manifold. 3–Cover assembly. 4–Air heater tube assembly.

REMOVING THE TURBOCHARGER

1. Remove the exhaust elbow **(1)** from the center section of the exhaust manifold by removing the bolts on the base of the elbow.

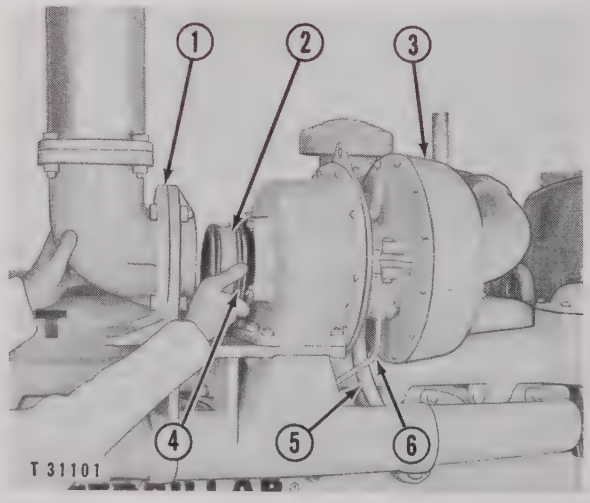

PREPARING TO REMOVE TURBOCHARGER
1–Elbow. 2–Retainer. 3–Turbocharger. 4–Ring. 5–Oil line. 6–Oil line.

NOTE

The exhaust elbow **(1)** when in position, is connected to the turbocharger **(3)** through the retainer **(2)**. The rings **(4)** are used to seal the connections. The retainer eliminates vibration between the turbocharger and the elbow and prevents the weight of the exhaust elbow and added piping from being transferred to the turbine housing.

2. Disconnect the oil lines **(5)** and **(6)** from the bottom of the turbocharger.
3. Remove the nuts from the turbocharger base **(10)** and loosen the air discharge pipe **(7)** from the engine inlet manifold **(9)**.
4. Lift the turbocharger as illustrated only high enough so that the air discharge pipe elbow can be removed from the turbocharger, being careful to avoid damaging the O-ring seals.

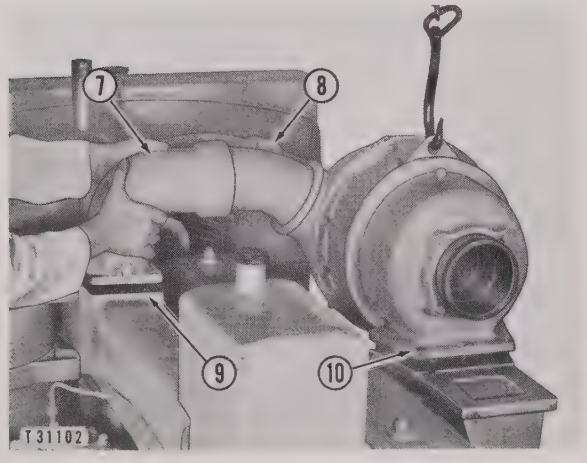

REMOVING TURBOCHARGER
7–Pipe. 8–Pipe. 9–Manifold. 10–Base.

5. With the turbocharger suspended just enough to clear the studs on the exhaust manifold, turn the turbocharger slightly until the inlet pipe **(8)** slips off the turbocharger inlet elbow.

NOTE

Keep O-ring seals clean and inspect for leaks.

INSTALLING THE TURBOCHARGER

1. Before installation, lubricate the turbocharger shaft with crankcase lubricating oil through the hole **(1)** and turn the shaft a few times by hand. This is necessary to prevent the bearings from overheating before the engine oil can be pumped to the turbocharger shaft during **the initial starting period.**

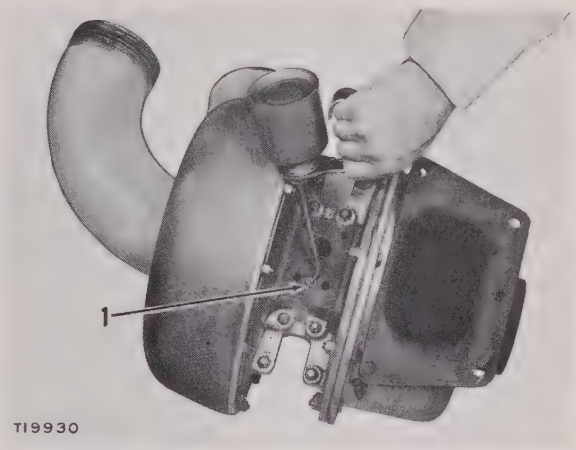

PREPARING TO INSTALL TURBOCHARGER
1–Oil hole.

2. Install the turbocharger in the reverse order of removal, being certain that the oil and manifold connections are tight.
3. The turbocharger requires no special test procedure. However, observe the turbocharger for the initial one-half hour of operation to determine that the unit is secure and that no lubrication leaks develop. Thereafter frequent periodic checks should be made as outlined in the Operation and Maintenance Instructions.

EXHAUST MANIFOLD

The exhaust manifold is located on the right side of the engine and is of a three-piece design utilizing ring seals on the two end portions. The center exhaust section supports the turbocharger and also has a pad for mounting the turbocharger exhaust pipe to prevent the weight of the exhaust pipe from resting on the turbocharger.

Removal and Installation

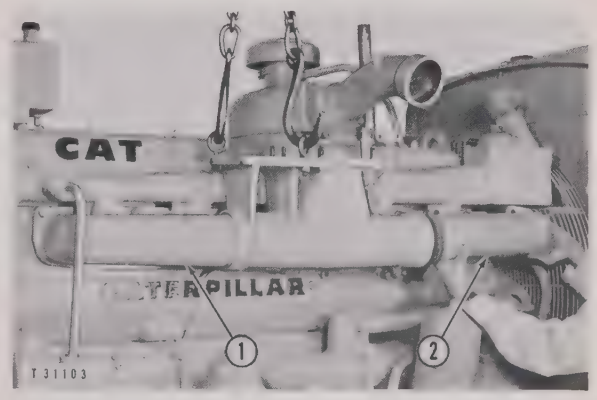

EXHAUST MANIFOLD REMOVAL AND INSTALLATION
1–End section. 2–End section.

1. Remove the turbocharger. See the covering topic.
2. Attach a suitable hoist as illustrated and remove the nuts holding the exhaust manifold.
3. Slide the manifold off the studs and remove the end sections **(1)** and **(2)** before lowering, since these may fall out of the center section.
4. Replace all exhaust manifold gaskets and install in the reverse order of removal.

AIR CLEANER

The single air cleaner used on this engine is mounted near the forward end of the inlet manifold near the left side of the engine in order to keep the transfer pipe length at a minimum. The transfer pipe and elbow between the air cleaner and the turbocharger, which is on the opposite side of the engine, are flexibly connected with double O-ring seals.

The cleaner is a tray-type and consists of a series of fixed screens **(1)**, removable tray assembly **(6)** and a cup assembly.

The removable tray assembly consists of a series of removable screens, a housing assembly and a ring assembly.

The cup assembly has no holes for oil transfer between the inner cup **(5)** and the outer cup **(4)** which allows a quantity of oil to remain undisturbed in the outer cup where dirt can settle out. The design of the baffle and outer oil cup prevents the oil from being carried high onto the upper screen. Reduction of oil "carry over" is an important factor, since the air-oil mixture contains a minute quantity of dirt.

Sealing between the cup assembly and the air cleaner body prevents the entrance of air into the bottom of the air cleaner which could disturb the oil washing action. In addition, sealing prevents oil from leaking to the outside on steep slopes or in very rough terrain. The sealing arrangement consists of O-ring seals **(3)** between the outer rim of the tray assembly and the oil cup between the air cleaner body and tray assembly.

During operation of the air cleaner, air travels down the center tube **(2)** into the inner cup **(5)**. The air carries oil from the inner cup up through the removable screens in the tray assembly. As the dirt-ladened air passes through the oil-covered screens, the dirt clings to the oil droplets and returns to the cups. Part of this oil is carried by the air into the outer cup through the openings between the ledge on the inner cup and the tray assembly. Oil carried into the outer cup is held there relatively undisturbed while the dirt settles to the bottom. The air continues through the fixed screens where further cleaning action takes place and then passes into the tube and elbow to the turbocharger.

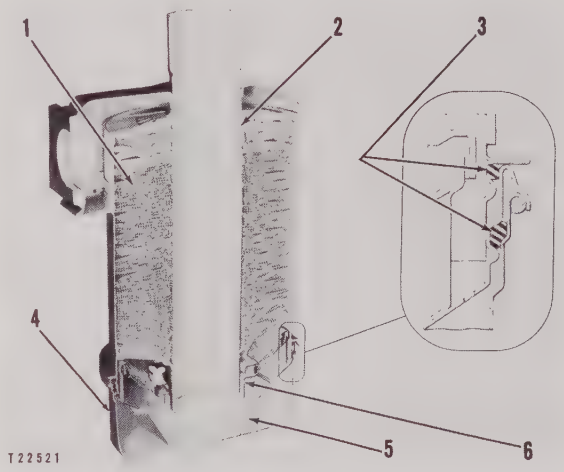

AIR CLEANER (CROSS-SECTION)
1–Fixed screens. 2–Center tube. 3–O-ring seals. 4–Outer cup. 5–Inner cup. 6–Removable tray.

Removal and Installation

1. Disconnect the fumes disposal pipe **(2)**.
2. Disconnect the pipe **(3)** from the air cleaner.
3. Remove the bolts securing the bands **(1)** around the air cleaner and remove the air cleaner by lifting vertically until the two bands are cleared.
4. Install in the reverse order of removal.

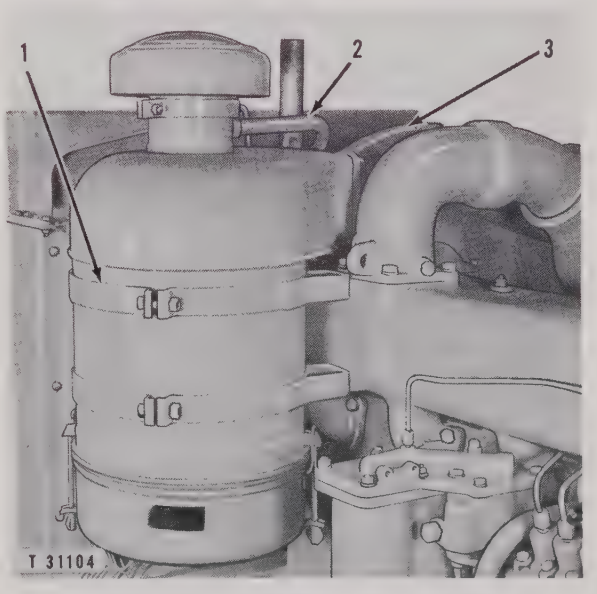

PREPARING TO REMOVE AIR CLEANER
1–Band. 2–Pipe. 3–Pipe.

Air Induction and Exhaust System

(Water-cooled Exhaust Manifold)

OPERATION

This engine incorporates the use of an exhaust gas driven turbocharger. Energy from the diesel engine exhaust gases, which ordinarily would be lost, is used to drive the turbocharger.

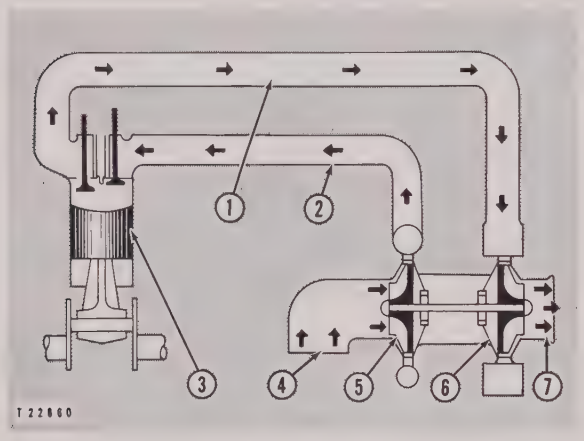

AIR INDUCTION AND EXHAUST SYSTEM
1–Exhaust manifold. 2–Inlet manifold. 3–Engine cylinder. 4–Elbow. 5–Impeller. 6–Turbine wheel. 7–Turbocharger exhaust elbow.

As the diesel engine starts, the flow of exhaust gases from the diesel engine exhaust manifold **(1)** is directed to the turbine wheel **(6)** through vanes on the nozzle. Since the turbine wheel and impeller **(5)** are mounted on a common shaft, the exhaust gases pass over the turbine wheel forcing it to rotate and in turn the impeller to rotate. The exhaust gases pass out the turbocharger exhaust elbow **(7)** and out the exhaust stack. Incoming air from the air cleaner enters the center of the impeller through the elbow **(4)**. The rotating impeller compresses the air and forces it into the inlet manifold **(2)** and on to the engine cylinders **(3)**.

Speed of the rotating parts increases as the engine load increases. Increasing turbocharger speed increases the flow of air into the engine.

INLET MANIFOLD

The inlet manifold **(3)** is located on the left side of the engine and has a three bolt flange at each cylinder port. On engines equipped with a gasoline starting engine the inlet manifold has a two-pass inlet air heater tube assembly **(7)** passing through it. The exhaust gases leaving the starting engine exhaust tube **(5)** enter at the front and pass through the tube assembly heating the incoming air from the turbocharger pipe **(2)** and then pass out the front of the manifold to the starting engine exhaust pipe **(1)**.

The tube assembly is supported at the rear by a cover assembly **(4)** which has a sliding pin arrangement which permits the tube to expand and contract when heating and cooling. The pin angles downward to compensate for the greater expansion of the lower tube.

The pipe and elbow between the inlet manifold and turbocharger incorporate a double O-ring seal arrangement so there are no solid connections between the turbocharger and the inlet manifold.

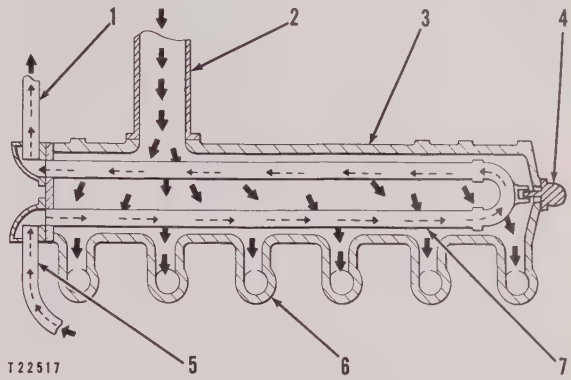

DIESEL ENGINE INLET MANIFOLD (CROSS-SECTION)
1–Exhaust pipe. 2–Turbocharger pipe. 3–Inlet manifold. 4–Cover assembly. 5–Exhaust tube. 6–Cylinder port. 7–Air heater tube assembly.

Removal and Installation

1. Disconnect the control panel bracket **(4)**.
2. Remove the elbow **(2)**, the air cleaner **(1)** and the starting engine exhaust tube.

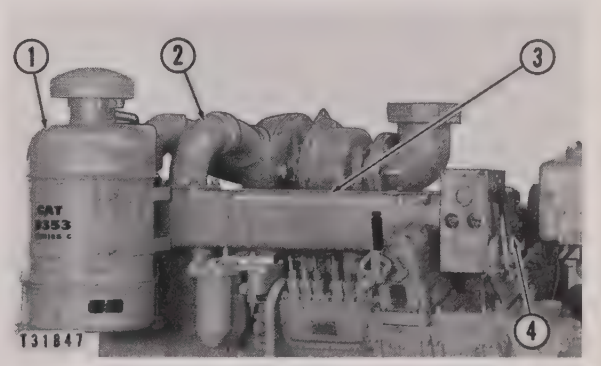

INLET MANIFOLD REMOVAL AND INSTALLATION
1–Air cleaner. 2–Elbow. 3–Inlet manifold. 4–Control panel bracket.

3. Attach a suitable hoist and remove the bolts from the manifold flanges.

4. Remove the inlet manifold **(3)**.
5. Install in the reverse order of removal, replacing any damaged gaskets.

Disassembly and Assembly

1. Remove the cover assembly **(3)**. This cover assembly pilots into the end of the tube assembly **(4)**.
2. Remove the starting engine exhaust pipe **(1)**.
3. Remove the tube assembly from the inlet manifold **(2)**.
4. Assemble in the reverse order of disassembly, replacing any damaged gaskets.

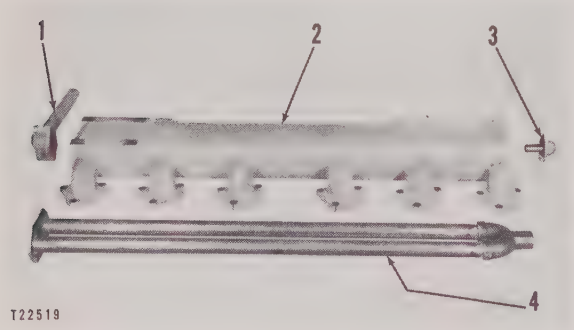

INLET MANIFOLD ASSEMBLY
1–Starting engine exhaust pipe. 2–Inlet manifold. 3–Cover assembly. 4–Air heater tube assembly.

REMOVING THE TURBOCHARGER

1. Remove the exhaust elbow **(3)** from the exhaust manifold by removing the bolts on the base of the elbow.

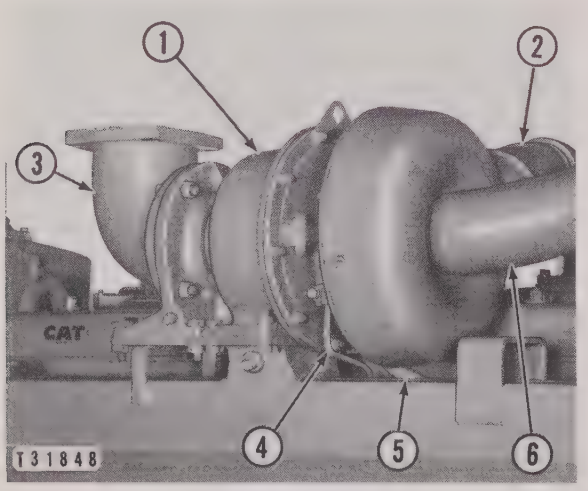

PREPARING TO REMOVE TURBOCHARGER
1–Turbocharger. 2–Pipe. 3–Elbow. 4–Supply oil line. 5–Return oil line. 6–Pipe.

NOTE

The exhaust elbow **(3)** when in position, is connected to the turbocharger **(1)** through a retainer. O-rings are used to seal the connections. The retainer eliminates vibration between the turbocharger and the elbow and prevents the weight of the exhaust elbow and added piping from being transferred to the turbine housing.

2. Disconnect the oil lines **(4)** and **(5)** from the bottom of the turbocharger.

NOTE

A small strainer assembly is located beneath the oil supply line flange. Care should be taken not to damage the strainer assembly.

3. Remove the nuts from the turbocharger base and loosen the air discharge pipe **(2)** from the engine inlet manifold.
4. Lift the turbocharger only high enough so the air discharge pipe elbow can be removed from the turbocharger, being careful to avoid damaging the O-ring seals.
5. With the turbocharger suspended just enough to clear the studs on the exhaust manifold, turn the turbocharger slightly until the inlet pipe **(6)** slips off the turbocharger inlet elbow.

NOTE

Keep O-ring seals clean and inspect for leaks.

INSTALLING THE TURBOCHARGER

1. Before installation, lubricate the turbocharger shaft with crankcase lubricating oil through the hole **(1)** and turn the shaft a few times by hand.

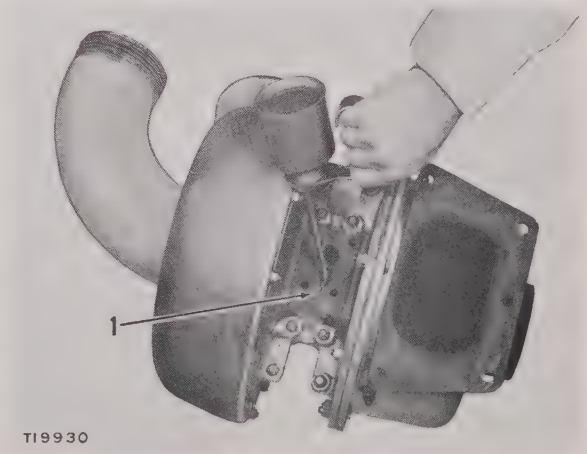

PREPARING TO INSTALL TURBOCHARGER
1–Oil hole.

This is necessary to prevent the bearings from overheating before the engine oil can be pumped to the turbocharger shaft during **the initial starting period.**

2. Install the turbocharger in the reverse order of removal, being certain that the oil and manifold connections are tight.

3. The turbocharger requires no special test procedure. However, observe the turbocharger for the initial one-half hour of operation to determine that the unit is secure and that no lubrication leaks develop. Thereafter frequent periodic checks should be made as outlined in the Operation and Maintenance Instructions.

EXHAUST MANIFOLD
(Water-cooled)

The internal construction of the water-cooled exhaust manifold is similar to the three-piece dry-type exhaust manifold. The water-cooled exhaust manifold differs in that it is of one piece construction and has a water jacket surrounding the exhaust gases passage.

Removal and Installation

1. Drain the coolant from the engine.

2. Remove the water line **(3)** and disconnect the tube **(2)**.

3. Remove the turbocharger **(1)** as described in the covering topic.

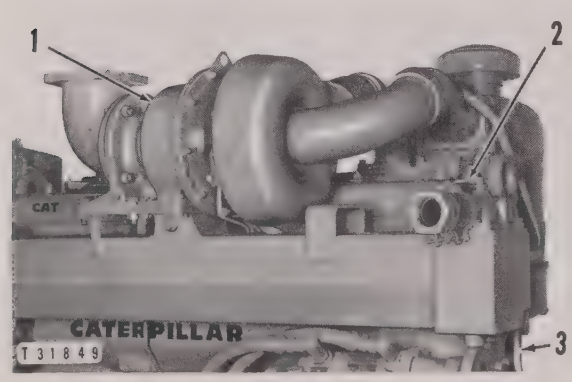

PREPARING TO REMOVE EXHAUST MANIFOLD
1–Turbocharger. 2–Tube. 3–Water line.

4. Remove the water line **(8)** and the elbow **(7)**.

5. Disconnect the heat indicator tube **(6)**.

6. Disconnect the water elbow **(4)** at the cylinder head.

7. Remove the nuts and bolts which hold the manifold **(5)** to the cylinder head, and remove the manifold as illustrated.

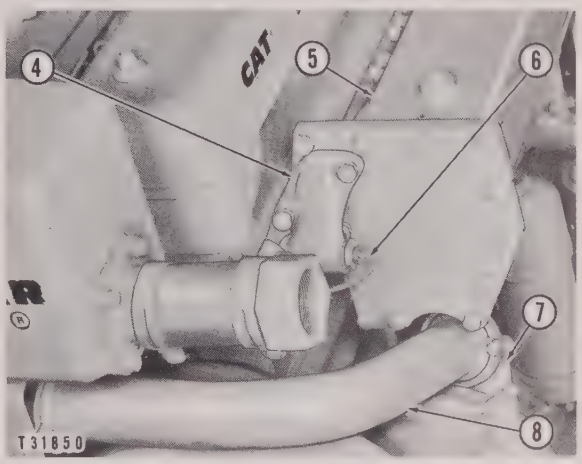

EXHAUST MANIFOLD REMOVAL
4–Water elbow. 5–Manifold. 6–Heat indicator tube. 7–Elbow. 8–Water line.

8. Install in the reverse order of removal, using new gaskets and seals as needed.

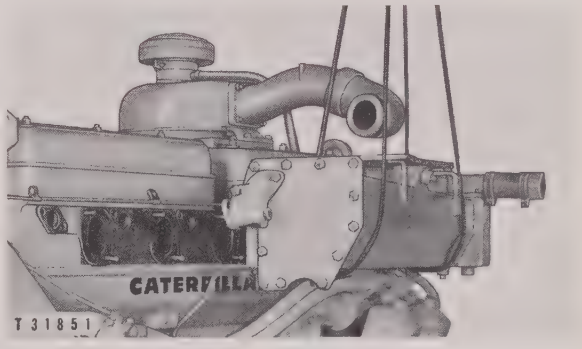

REMOVING THE MANIFOLD

AIR CLEANER

The single air cleaner used on this engine is mounted near the forward end of the inlet manifold on the left side of the engine in order to keep the transfer pipe length at a minimum. The transfer pipe and elbow between the air cleaner and the turbocharger, which is on the opposite side of the engine, are flexibly connected with double O-ring seals.

The cleaner is a tray-type and consists of a series of fixed screens **(1)**, removable tray assembly **(6)** and a cup assembly.

The removable tray assembly consists of a series of removable screens, a housing assembly and a ring assembly.

The cup assembly has no holes for oil transfer be-

tween the inner cup **(5)** and the outer cup **(4)** which allows a quantity of oil to remain undisturbed in the outer cup where dirt can settle out. The design of the baffle and outer oil cup prevents the oil from being carried high onto the upper screen. Reduction of oil "carry over" is an important factor, since the air-oil mixture contains a minute quantity of dirt.

Sealing between the cup assembly and the air cleaner body prevents the entrance of air into the bottom of the air cleaner which could disturb the oil washing action. In addition, sealing prevents oil from leaking to the outside on steep slopes or in very rough terrain. The sealing arrangement consists of O-ring seals **(3)** between the outer rim of the tray assembly and the oil cup between the air cleaner body and tray assembly.

During operation of the air cleaner, air travels down the center tube **(2)** into the inner cup **(5)**. The air carries oil from the inner cup up through the removable screens in the tray assembly. As the dirt-ladened air passes through the oil-covered screens, the dirt clings to the oil droplets and returns to the cups. Part of this oil is carried by the air into the outer cup through the openings between the ledge on the inner cup and the tray assembly. Oil carried into the outer cup is held there relatively undisturbed while the dirt settles to the bottom. The air continues through the fixed screens where further cleaning action takes place and then passes into the tube and elbow to the turbocharger.

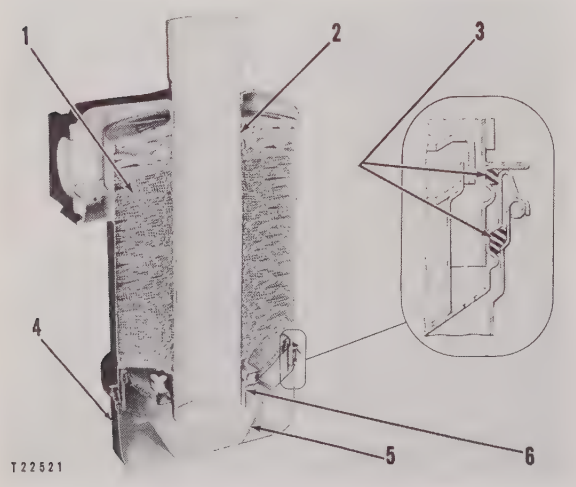

AIR CLEANER (CROSS-SECTION)
1–Fixed screens. 2–Center tube. 3–O-ring seals. 4–Outer cup. 5–Inner cup. 6–Removable tray.

Removal and Installation

1. Disconnect the fumes disposal tube **(2)**.
2. Disconnect the pipe **(3)** from the air cleaner.
3. Remove the bolts securing the bands **(1)** around the air cleaner and remove the air cleaner by lifting vertically until the two bands are cleared.
4. Install in the reverse order of removal.

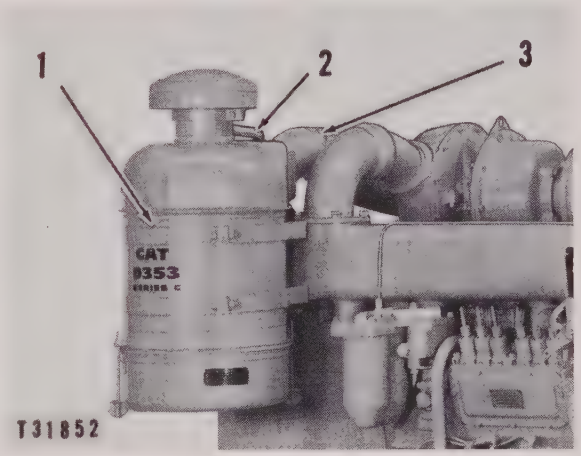

PREPARING TO REMOVE AIR CLEANER
1–Band. 2–Tube. 3–Pipe.

Air Induction and Exhaust System

OPERATION

This engine incorporates the use of an exhaust gas driven turbocharger. Energy which ordinarily would be lost from the diesel engine exhaust gases is used to drive the turbocharger.

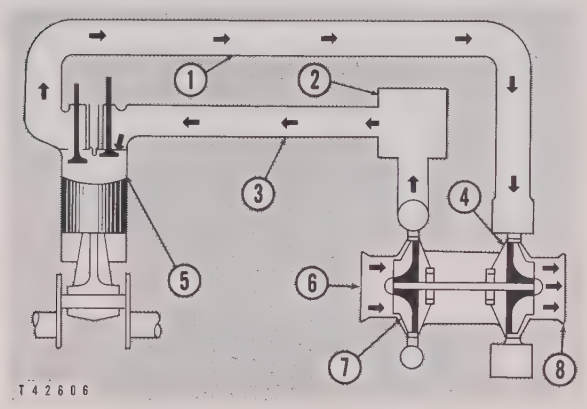

AIR INDUCTION AND EXHAUST SYSTEM
1–Exhaust manifold. 2–Aftercooler. 3–Inlet manifold. 4–Turbine wheel. 5–Engine cylinder. 6–Inlet opening. 7–Impeller. 8–Outlet opening.

As the diesel engine starts, the flow of exhaust gases from the diesel engine exhaust manifold **(1)** is directed to the turbine wheel **(4)** through vanes on the nozzle. The turbine wheel and impeller **(7)** are mounted on a common shaft. The exhaust gases pass over the turbine wheel forcing it and the impeller to rotate. The exhaust gases then pass through the outlet opening **(8)** and out the exhaust stack.

Incoming air from the air cleaner enters around the center of the impeller through the inlet opening **(6)**. The rotating impeller compresses the air and forces it through the aftercooler **(2)**, to the inlet manifold **(3)** and into the engine cylinder **(5)**.

Speed of the rotating parts increases as the engine load increases. Increasing turbocharger speed increases the flow of air into the engine.

INLET MANIFOLD

The inlet manifold is located on the left side of the engine and has a three bolt flange at each cylinder port. The manifold consists of three sections which are bolted together. The center section serves as the aftercooler housing while the front section contains a two-pass inlet air heater which is used in conjunction with a gasoline starting engine. The end of the front section is covered when the gasoline starting engine is not used.

Removal and Installation

1. Drain the coolant from the engine.

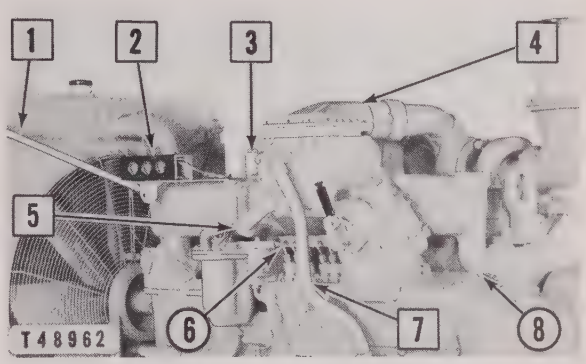

PREPARING TO REMOVE INLET MANIFOLD

☐ **Remove**

1–Radiator brace. 2–Gauge panel group. 3–Vent line. 4–Aftercooler cover. 5–Water line. 6–Fuel injection lines (six). 7–Water line. 8–Inlet manifold.

2. Remove the fuel injection lines **(6)** and cover all openings to prevent the entry of dirt into the fuel system.

NOTE

If the engine is equipped with a gasoline starting engine, remove the exhaust pipe between the starting engine and the front end of the manifold **(8)**.

3. Install two eyebolts **(9)** and **(10)**, attach a suitable hoist and remove the manifold **(8)** as illustrated.
4. Replace all damaged gaskets.

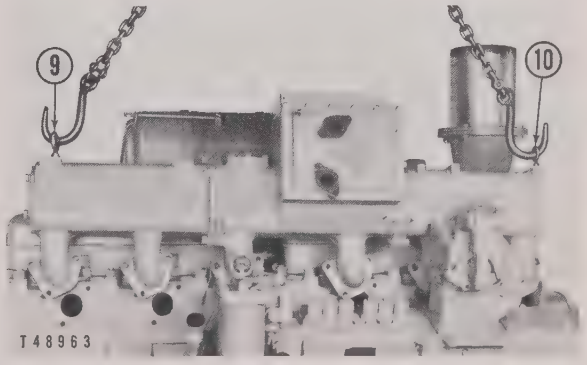

INLET MANIFOLD REMOVAL
9–1/2" - 13 (NC) eyebolt. 10–3/8" - 16 (NC) eyebolt.

Disassembly and Assembly

NOTE

On models not equipped with a gasoline starting engine the exhaust pipe **(1)** and the air

heater tube assembly **(2)** are not used and the end of the manifold is covered.

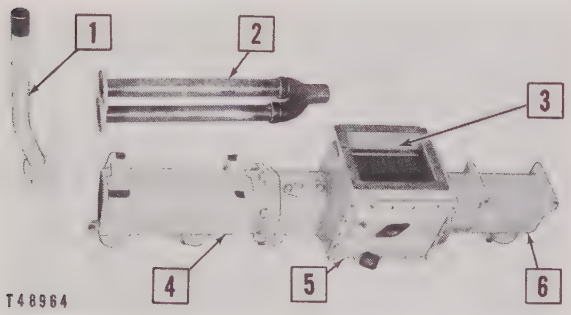

MANIFOLD DISASSEMBLY

☐ **Remove**

1–Exhaust pipe. 2–Air heater tube assembly. 3–Aftercooler case. 4–Front section. 5–Cover. 6–Rear section.

Replace all damaged gaskets.

AFTERCOOLER

The center section of the inlet manifold serves as the housing for the aftercooler core.

Removal and Installation

Drain the coolant from the engine.

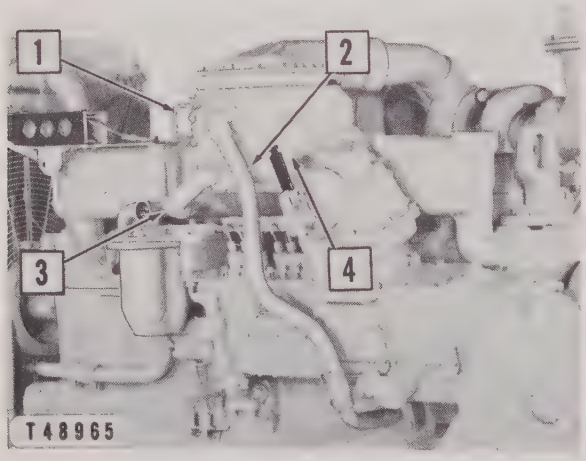

PREPARING TO REMOVE AFTERCOOLER CORE

☐ **Remove**

1–Vent tube. 2–Water line. 3–Water line. 4–Cover.

Remove the aftercooler core as shown.

Replace all damaged gaskets.

NOTE

A pilot pin on the back of the core fits into a hole in the housing to align the core and for added support.

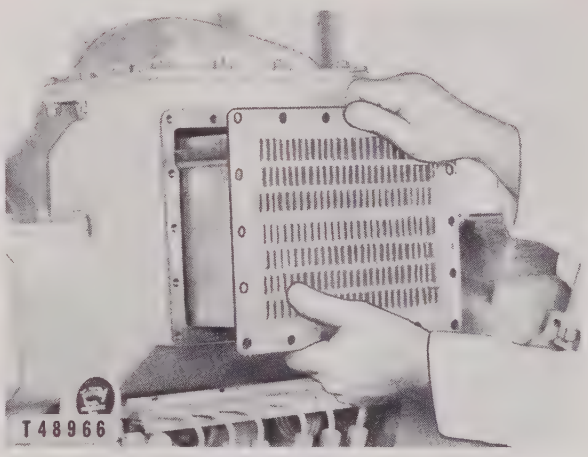

CORE REMOVAL

Cleaning

Clean the water passages with a piece of strap iron 5/8″ wide by .035″ thick as shown.

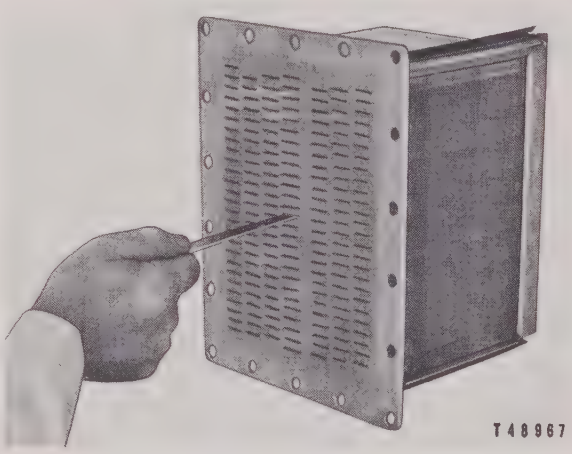

CLEANING THE CORE

Blow out both the water passages and the air side of the core with compressed air.

REMOVING THE TURBOCHARGER

1. Remove the air cleaner **(7)**. See the covering topic.
2. Disconnect the turbocharger oil drain line **(6)** at the turbocharger.
3. Attach a suitable sling to the turbocharger, remove the mounting bolts and tip the turbocharger back to remove the pipe **(4)**.
4. Remove the turbocharger as illustrated.

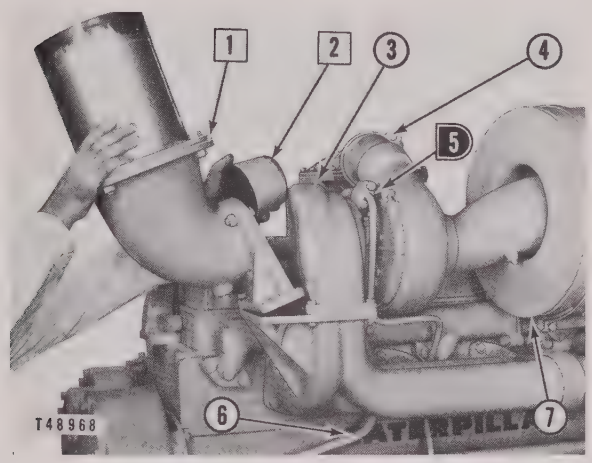

PREPARING TO REMOVE TURBOCHARGER

□ Remove ◗ Disconnect

1–Elbow. 2–Coupling. 3–Turbocharger. 4–Pipe. 5–Turbocharger oil supply line. 6–Turbocharger oil drain line. 7–Air cleaner.

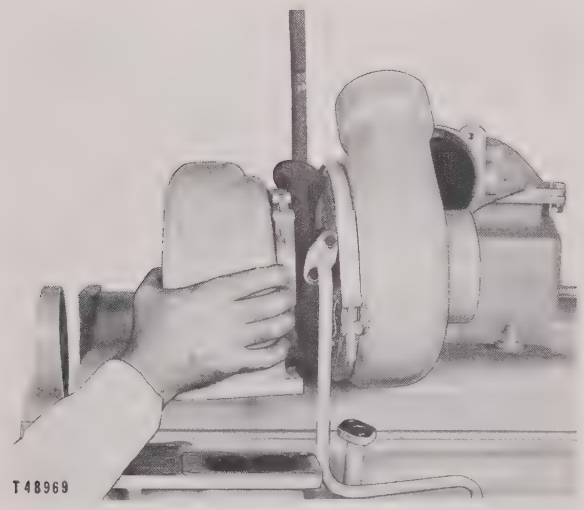

TURBOCHARGER REMOVAL

5. Inspect and replace all damaged gaskets and seals.

INSTALLING THE TURBOCHARGER

1. Before installation, fill the turbocharger oil inlet cavity with clean crankcase lubricating oil and turn the shaft a few times by hand. This is necessary to prevent the bearings from overheating before the engine oil can be pumped to the turbocharger shaft during the initial starting period.
2. Clean all mating surfaces and replace any worn or damaged gaskets.
3. Install the turbocharger in the reverse order of removal, being certain that the oil and manifold connections are tight.
4. The turbocharger requires no special test procedure. However, observe the turbocharger for the initial one-half hour of operation to determine that the unit is secure and that no lubrication leaks develop. Thereafter frequent periodic checks should be made as outlined in the Operation and Maintenance Instructions.

EXHAUST MANIFOLD
(Dry Type)

Removal and Installation

Remove the turbocharger **(1)** and the air cleaner **(2)**. See the covering topics.

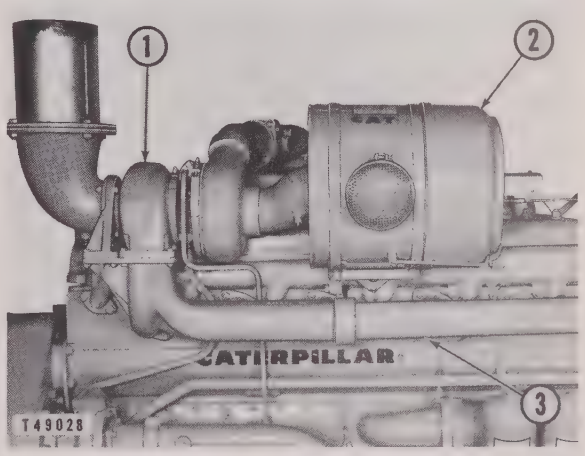

PREPARING TO REMOVE MANIFOLD
1–Turbocharger. 2–Air cleaner. 3–Manifold.

Attach a suitable hoist, remove the mounting nuts and remove the manifold **(3)** as illustrated.

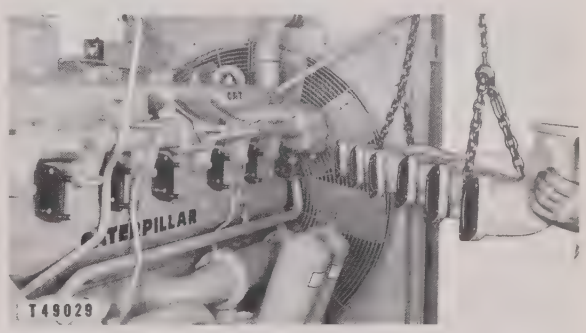

MANIFOLD REMOVAL

Replace all damaged gaskets.

EXHAUST MANIFOLD
(Water-Cooled)

Removal and Installation

1. Drain the cooling system.

2. Remove the turbocharger **(1)** and air cleaner **(2)**. See the covering topics.

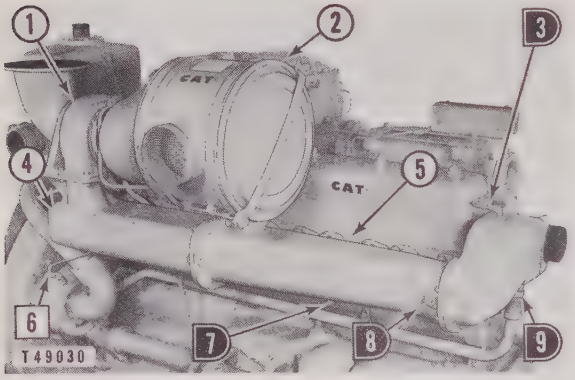

PREPARING TO REMOVE MANIFOLD

☐ Remove ◗ Disconnect

1–Turbocharger. 2–Air cleaner. 3–Tube. 4–Elbow. 5–Manifold. 6–Tube. 7–Tube. 8–Water temperature gauge line. 9–Water line.

3. Remove the water elbow **(4)** that connects the manifold to the head at the rear of the engine.
4. Install two 3/8″ - 16 (NC) eyebolts, attach a suitable hoist and remove the manifold **(5)** as illustrated.

MANIFOLD REMOVAL

5. Replace all damaged gaskets.

AIR CLEANER

The dry-type air cleaner contains a replaceable filter element **(3)**. The element can be removed and cleaned with air pressure, or by washing as recommended in the Operation and Maintenance Instructions.

During operation, air enters the air cleaner at **(2)**, flows around the outside and through the filter element to the center of the air cleaner. The filtered air then leaves the air cleaner at **(4)** and passes to the turbocharger. Air is prevented from by-passing the filter element by the seal **(1)**. A plate **(5)** seals one end of the filter element.

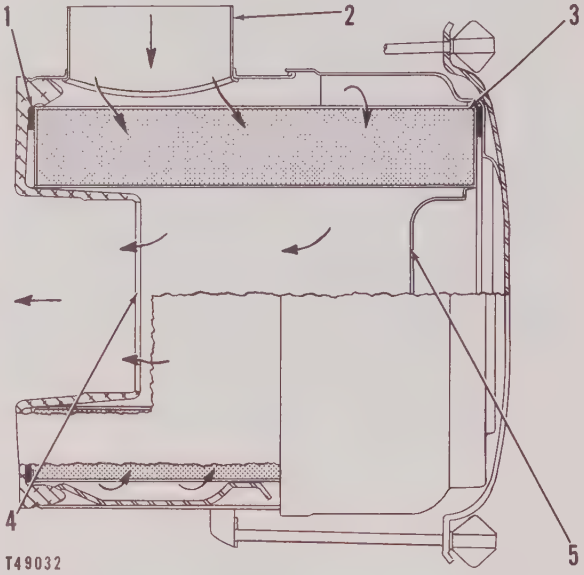

AIR CLEANER AIR FLOW

1–Seal. 2–Air cleaner inlet. 3–Filter element. 4–Air cleaner outlet. 5–Plate.

Removal and Installation

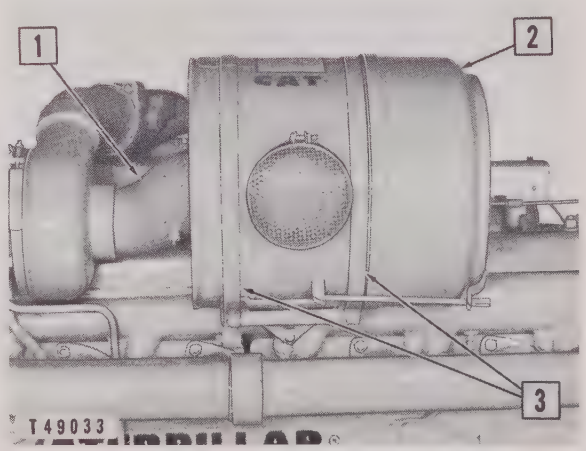

AIR CLEANER REMOVAL

☐ Remove

1–Elbow. 2–Air cleaner. 3–Bands.

Inspect the O-ring seals and replace if necessary.

Air Induction and Exhaust System

(Natural Gas Engines)

OPERATION

The power output of gas engines is dependent upon the amount of air/fuel mixture admitted to the cylinders. This amount of mixture is controlled by a throttle disc **(7)** located in the carburetor **(3)**.

For efficient engine operation, a relatively constant air/fuel mixture ratio must be maintained. Air flow is controlled by the carburetor **(3)**. Fuel flow is controlled by the carburetor regulator **(5)**, and the venturi **(6)** in the throat of each carburetor to maintain the definite air/fuel mixture ratio.

NOTE

Air/fuel mixture ratio means pounds of air per pound of fuel.

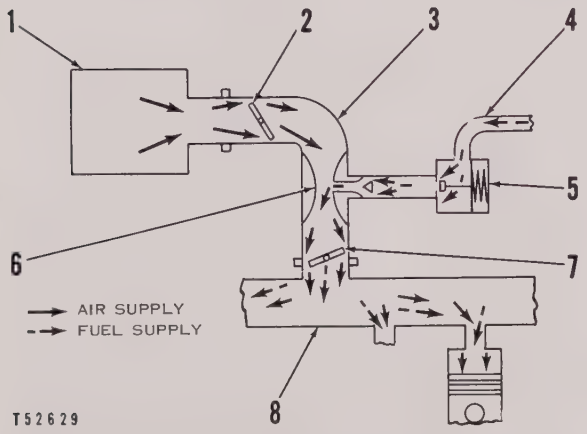

AIR INDUCTION AND EXHAUST

1–Turbocharger or air cleaner. 2–Choke disc. 3–Carburetor. 4–Fuel supply line. 5–Carburetor regulator. 6–Venturi. 7–Throttle disc. 8–Inlet manifold.

On naturally aspirated engines, air from the air cleaner **(1)** at approximately atmospheric pressure is drawn through the carburetor venturi. Turbocharged engines force air through the carburetor venturi. A smaller diameter at the throat of the venturi increases the air velocity which results in a pressure decrease in the venturi throat. This aids in admitting gas into the air stream.

NOTE

Fuel gas pressure in the supply line **(4)** at the inlet to the carburetor regulator **(5)** is always maintained about .25 pounds per square inch above the pressure of the air entering the carburetor venturi.

As the speed of the engine increases, an increased amount of air is drawn through the venturi, therefore, a greater pressure drop is created and a proportionately greater amount of fuel enters the air stream. The carburetor and carburetor regulator are thus able to maintain approximately a constant mixture ratio between the air and fuel throughout the speed range of the engine. When the engine is operated at reduced load, or slow speed, the throttle disc is almost closed and only a small amount of fuel mixture will enter the cylinders with corresponding low compression and combustion pressures.

Since the power developed depends on the total amount of air/fuel mixture admitted to the engine, turbocharged engines develop greater horsepower than naturally aspirated engines.

A separate fuel system is incorporated in the carburetor to provide the correct mixture for starting. A starting fuel adjustment screw allows for fine adjustment of the starting fuel mixture. An air choke and a gas choke are mounted on a common shaft. The chokes have only two positions, fully open and fully closed. When fully closed, all of the air admitted to the engine flows through an orifice in the air choke disc. The air choke provides a high vacuum to open the main valve in the carburetor regulator and the gas choke closes off the main fuel system during starting.

The correct method for stopping the engine is to close the valve in the fuel supply line. The carburetor has a built-in safety feature. The main valve in the regulator is spring loaded to the normally closed position so it is only opened to allow fuel flow when the engine is being started or run. The main valve is opened by a pressure sensing mechanism, connected to the throat of the venturi in the carburetor. With the engine stopped, there is no air flow through the venturi, no pressure drop in the venturi and consequently, the main valve in the carburetor regulator remains closed.

The carburetor and the regulator rarely require attention. If difficulty is being experienced, the carburetor and the regulator can be completely disassembled, washed, and cleaned with compressed air. Inspect all parts carefully and if worn or damaged, replace them with new parts. Diaphragms especially, may become defective because of slight shrinking, even though the appearance is still normal.

CARBURETOR AND CARBURETOR REGULATOR

Removal and Installation

The carburetor **(3)** and regulator **(4)** can be removed and installed as a unit.

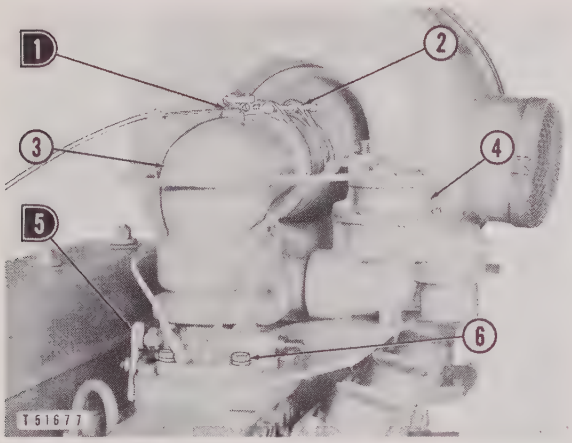

PREPARING TO REMOVE CARBURETOR AND REGULATOR

D Disconnect

1–Choke cable. 2–Hose clamp. 3–Carburetor. 4–Regulator. 5–Governor control linkage. 6–Bolts (four).

1. Shut off the fuel supply.
2. Loosen the clamp **(2)** and remove the bolts **(6)** securing the carburetor **(3)** and the regulator mounting plate to the inlet manifold.
3. Disconnect the fuel supply line from the regulator and remove the carburetor and regulator from the engine.
4. When installing the carburetor and regulator, tighten the connections to the throttle linkage and the air cleaner or turbocharger hose first. These connections are easier to make before the carburetor is bolted to the manifold.

Disassembly and Assembly of Carburetor

1. Remove the four bolts securing the air horn **(1)** to the throttle tube **(18)**.
2. Remove the tube **(20)**.
3. Remove the economizer body **(13)**.
4. Remove the four screws which hold the air choke disc **(2)** and the gas choke disc **(8)** to the choke shaft. Remove the screws which hold the choke wire support assembly **(3)** to the air horn, and remove the choke shaft. Loosen the setscrews and remove the choke lever from the choke shaft.
5. Remove the setscrew **(5)** and the venturi **(7)**.
6. Remove the economizer cover **(11)** from the economizer body. This permits the spring **(15)** and diaphragm **(16)** to be removed.
7. Loosen the locknut **(9)** and remove the fuel adjusting screw **(10)** from the elbow.

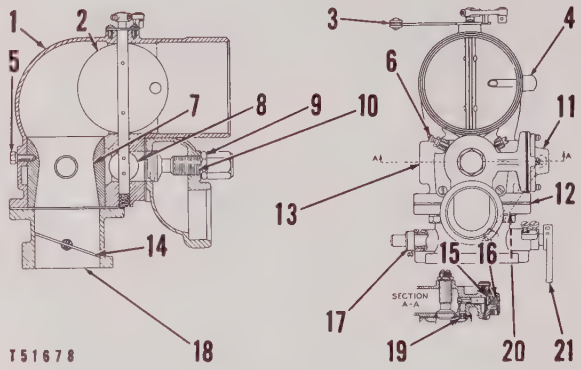

CARBURETOR

1–Air horn.
2–Choke disc.
3–Support assembly.
4–Pitot tube.
5–Setscrew.
6–Starting adjusting screw.
7–Venturi.
8–Choke disc.
9–Locknut.
10–Fuel adjusting screw.
11–Economizer cover.
12–Gasket.
13–Economizer body.
14–Throttle disc.
15–Spring.
16–Economizer diaphragm assembly.
17–Collar.
18–Throttle tube.
19–Economizer orifice.
20–Tube.
21–Throttle lever.

8. Remove the two screws which secure the throttle disc **(14)** to the throttle shaft. Remove the collar **(17)**, and remove the shaft. Loosen the clamp screw and drive out the spring pin to remove the throttle lever **(21)** from the throttle shaft.
9. The orifice **(19)** can be removed with a screwdriver for inspection, cleaning and replacement, if necessary.
10. Clean and inspect the orifice in the pitot tube opening for the balance line.
11. Inspect the gasket **(12)** and diaphragm **(16)** and replace if necessary.
12. Inspect the throttle shaft bearings and adjusting screws **(6)** and **(10)**, and replace if necessary.
13. Adjust the high idle stop screw on the lever **(21)** so that the throttle disc **(14)** is approximately 10° closed from the full open position. This gives the necessary turbulence for full load operation. Thoroughly wash all parts and blow out passageways with compressed air. After assembly, complete adjustment of the carburetor as outlined in the topic, ADJUSTMENTS.

Disassembly and Assembly of Regulator

1. Remove the eight screws and remove the bowl cover **(2)** and diaphragm **(4)**.
2. Lift the push rod **(3)** out of the bowl.
3. Remove the locking ring **(5)** and plate **(6)**.
4. Remove the three screws retaining the pilot valve assembly **(8)** and remove the assembly.

5. Remove the eight screws securing the bowl **(7)** to the body **(11)** and separate the parts. Remove the spring **(10)** and diaphragm assembly **(12)**.
6. Remove the valve assembly **(15)**.
7. Remove the screws **(14)** and remove the valve seat **(13)**.

Thoroughly wash all parts and blow out all passages with compressed air.

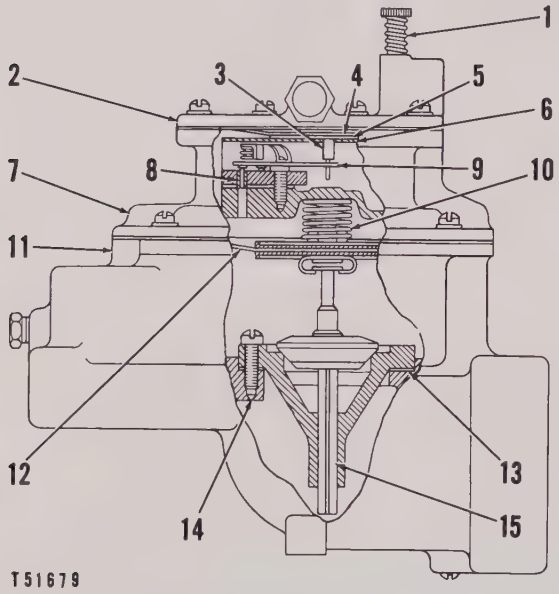

CARBURETOR REGULATOR

1–Idle adjusting screw.	8–Valve assembly.
2–Bowl cover.	9–Lever arm.
3–Push rod.	10–Diaphragm spring.
4–Diaphragm assembly.	11–Body.
5–Locking ring.	12–Diaphragm assembly.
6–Partition plate.	13–Valve seat.
7–Bowl.	14–Screws (three).
	15–Valve assembly.

Examine the diaphragm and replace if necessary. Check the adjusting screw **(1)**, valve and seat in the valve assembly **(8)** and the valve **(15)** and seat **(13)**, and replace if necessary.

The distance between the top of the push rod **(3)** and the top of the bowl **(7)** is important. This distance can be measured with the Ensign Combination Regulator Gauge No. 8276 **(16)** available through the Ensign Carburetor Co. This is a two position gauge having two steps marked "clear" and "touch." Hold the gauge on edge over the regulator with the edge resting on the bowl, and slide the gauge back and forth over the push rod. When using the step marked "touch," the push rod will move slightly. When the step marked "clear" slides over the push rod, the rod must not move. If an adjustment must be made, bend the lever arm **(9)** slightly by using the slot provided in the gauge. The bend should be made 1/4 inch from the hole in the end of the arm with one finger pressing down on the arm to prevent distortion or injury to the pilot valve and seat.

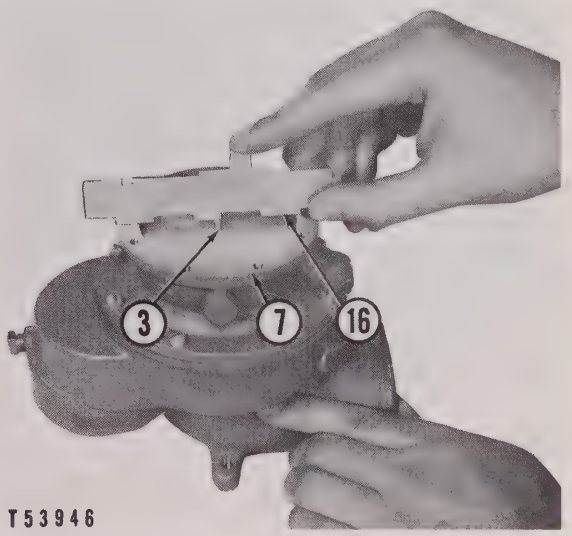

CARBURETOR REGULATOR ADJUSTMENT INSPECTION
3–Push rod. 7–Bowl. 16–Ensign Combination Regulator Gauge No. 8276.

Inspect the plates on the diapraghm **(4)**. If the plates are bowed, straighten or replace them before installing. Bowed plates will limit the upward movement of the diaphragm. Install the diaphragm **(4)**, marked "This Side Up," with plate fastening ears down.

Carburetor and Regulator Adjustments

The following adjustments need be made only when starting an engine for the first time, after reconditioning the carburetor or regulator, or when changing to a different grade of fuel.

Since the heating value of gaseous fuels varies in different localities, the number of turns given for opening the adjustment screws is only approximate.

Pre-starting Adjustments:

1. Set the starting gas adjustment screw **(2)** on the carburetor four full turns open when natural gas is to be used.
2. Set the main adjustment screw **(3)** on the carburetor eight and one quarter turns open when natural gas is to be used.
3. Set the idle fuel adjustment screw **(1)** on the regulator one full turn open when natural gas is to be used.

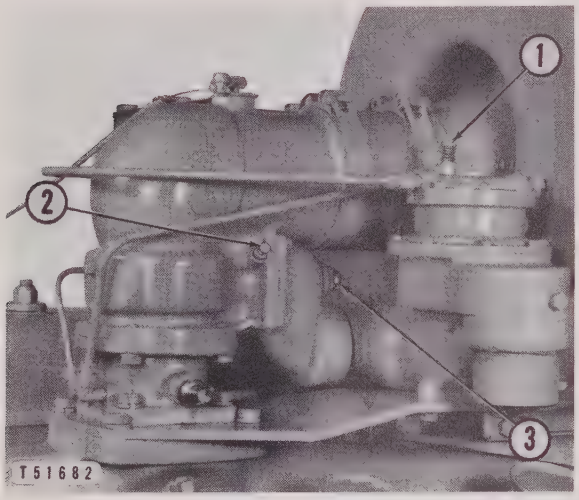

CARBURETOR AND REGULATOR ADJUSTMENTS
1–Idle adjustment screw. 2–Starting adjustment screw. 3–Main adjustment screw.

4. Pull the choke control out to the full choke position.
5. Move the governor control lever to one-half speed position.
6. Start the engine.

After-starting Adjustments:

1. With the governor control lever in the one-half speed position, adjust the starting gas adjustment screw **(2)** on the carburetor. First, adjust for maximum engine speed and then turn the screw **(2)** out (richer mixture) until the engine speed drops slightly. Tighten the locknut.
2. Push the choke control all the way in. The choke is open in this position.
3. Move the governor control lever to two-thirds speed position and make a temporary adjustment by turning the main gas adjustment screw **(3)**, either direction, until maximum engine speed is obtained.
4. Idle adjustment:
   a. After the engine is warm, set the low idle throttle-stop screw **(5)** on the carburetor for the best idle speed. (Recommended idle speed 425 RPM.)
   b. Adjust the idle adjustment screw **(1)** on the regulator for the highest idle speed, then re-adjust throttle-stop screw.
   c. Repeat steps a and b to obtain an even idle speed.

NOTE

When the engine is equipped with a Woodward Governor, no low idle speed stop screw adjustment is necessary. Set stop screw **(1)** so that it hits the low idle stop just before the throttle is completely closed. Adjust the idle fuel adjustment screw for stable engine operation at high idle engine speed.

5. Final main gas adjustment (with the engine loaded):
   a. Move the governor control lever from low idle speed to full speed position. Load the engine with more than one-fourth but less than three-fourths of full load. Hold the throttle valve control rod **(6)** to keep it from turning and do not vary the load. (The governor must not be able to change engine speed while making the adjustment.)

NOTE

If a Woodward governor is used, move the synchronizer control to the high speed position. Hold the throttle valve control rod **(6)** to keep it from turning and disconnect the linkage from the governor to this rod to make the following adjustment.

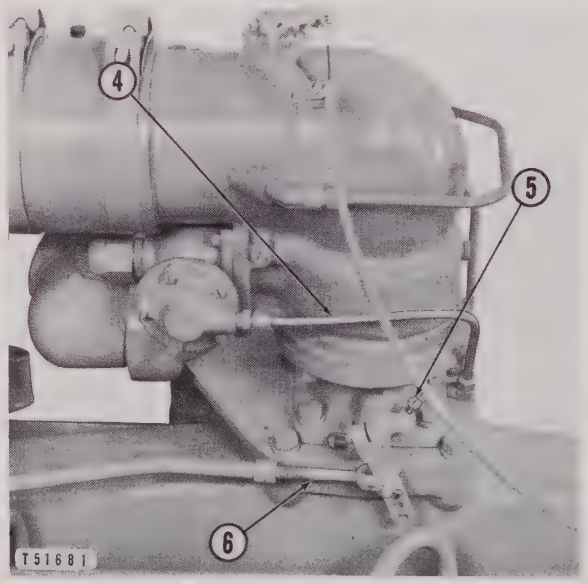

CARBURETOR AND REGULATOR ADJUSTMENTS
4–Line. 5–Low idle throttle-stop adjustment screw. 6–Throttle valve control rod.

   b. Turn the main adjustment screw **(3)** in either direction until maximum speed is obtained, then turn screw **(3)** in (leaner mixture) until the engine speed drops 10 to 20 RPM. Tighten the locknut.

c. Release the throttle valve control rod **(6)**; it should now be free to turn. (Connect any linkage that has been disconnected.)

6. Alternate final main gas adjustment (engine unloaded):

   a. Move the governor control to low idle position and carefully set the idle adjustment as it affects the mixture under no load conditions.

   b. On naturally aspirated engines, disconnect intake manifold economizer connection line **(4)** and plug the inlet manifold connection.

   c. Move the governor control lever to the full speed position and hold the throttle valve control rod **(6)** to keep it from turning. Turn the main gas adjustment screw **(3)** out until maximum speed is obtained, then, turn the screw in until the speed begins to drop. Turn the screw out halfway between these two points and tighten the locknut.

   d. If economizer connection line **(4)** was disconnected, unplug the inlet manifold connection and install the line.

LINE PRESSURE REGULATOR

If the engine is turbocharged, or if the fuel supply pressure is exceptionally high, then a line pressure regulator will be required.

The line pressure regulator should be installed in the supply line between the supply source and the carburetor regulator.

Adjustment

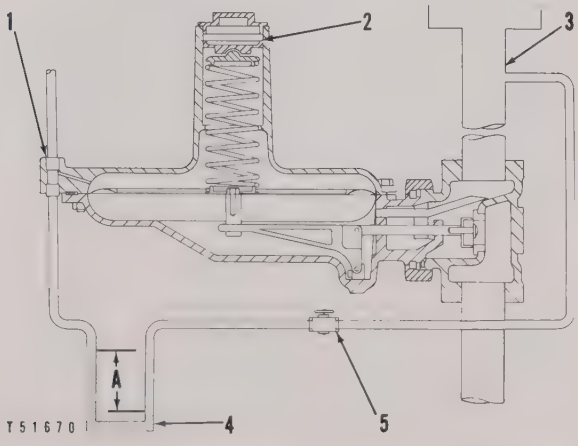

CHECKING LINE PRESSURE REGULATOR ADJUSTMENT
(Schematic diagram for turbocharged engine)
A–Pressure differential. 1–Bottom port. 2–Adjustment screw. 3–Carburetor regulator. 4–Water manometer. 5–Valve.

1. Line pressure regulator adjustment can be checked with a water manometer.

2. Attach one end of a water manometer **(4)** to the gas inlet of the carburetor regulator **(3)**. On turbocharged engines, attach the other end of the manometer to the bottom port **(1)** of the line pressure regulator as shown, to measure the pressure differential **(A)**. On naturally aspirated engines, attach the manometer only at **(3)** and leave the other end open to the atmosphere.

3. Remove the cap and turn screw **(3)** until the value **(A)** is within the range listed in the topic, SPECIFICATIONS.

NOTE

The valve **(5)** should be closed before the engine is stopped. This will prevent the manometer fluid from being drawn into the inlet of the carburetor regulator **(3)**.

INLET MANIFOLD

Remove the carburetor **(2)** and regulator as a unit. See the covering topic.

Mark the high tension leads **(5)** and low tension leads **(7)** before disconnecting so they can be replaced in the same position.

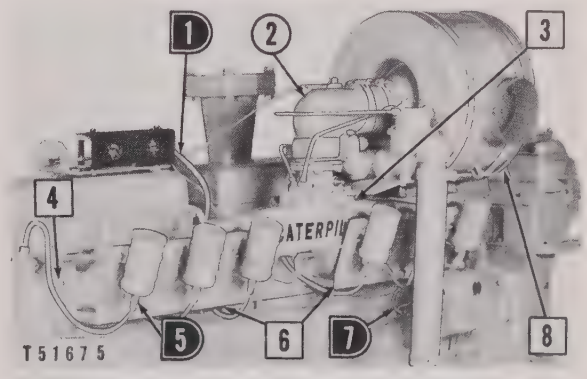

PREPARING TO REMOVE INLET MANIFOLD
Remove **Disconnect**

1–Oil pressure gauge line. 2–Carburetor. 3–Inlet manifold. 4–Bolts (twenty-four). 5–High tension leads (six). 6–Brackets (two). 7–Low tension leads (six). 8–Air cleaner assembly.

Inspect all gaskets and replace if damaged. When installing the inlet manifold, tighten all the connections securely to prevent foreign material entering the manifold.

EXHAUST MANIFOLD

A water-cooled exhaust manifold is standard.

Removal and Installation

Drain the coolant from the engine.

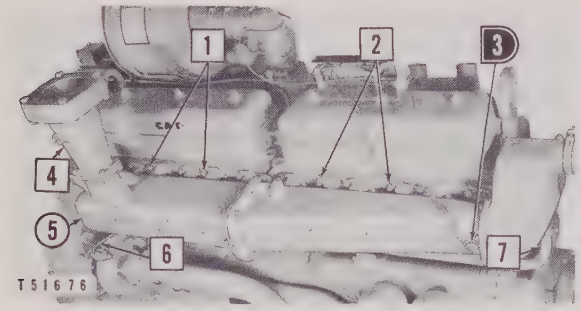

PREPARING TO REMOVE EXHAUST MANIFOLD

☐ Remove ◗ Disconnect

1–Bolts (twelve). 2–Nuts (twenty-three). 3–Water temperature gauge line. 4–Exhaust pipe. 5–Exhaust manifold. 6–Tube. 7–Hose.

Using a suitable sling and hoist, remove the exhaust manifold **(5)**.

Inspect the gaskets and replace if necessary.

NOTE

The use of 9M3710 Antiseize Thread Compound on bolts subject to heat is recommended to ease future removal.

Disassembly and Assembly

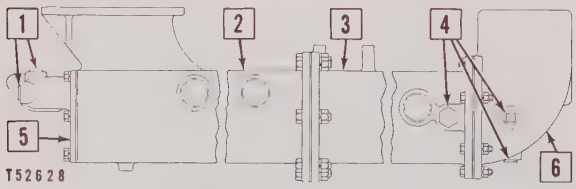

EXHAUST MANIFOLD ASSEMBLY

☐ Remove

1–Plugs (two). 2–Manifold. 3–Manifold. 4–Plugs (three). 5–Cover. 6–Bonnet.

Inspect all gaskets and replace, if necessary, before assembly.

AIR CLEANER

The dry-type air cleaner is connected to the carburetor or turbocharger by adapter **(2)**. The element **(5)** can be removed and cleaned with air pressure or by washing as recommended in the Operation and Maintenance Instructions.

During operation, air enters the air cleaner at **(1)** flows around the outside and through the filter element to the center of the air cleaner. The filtered air then leaves the air cleaner and passes into the turbocharger or carburetor through the adapter. Air is prevented from by-passing the filter elements by the gaskets **(3)** and **(4)**.

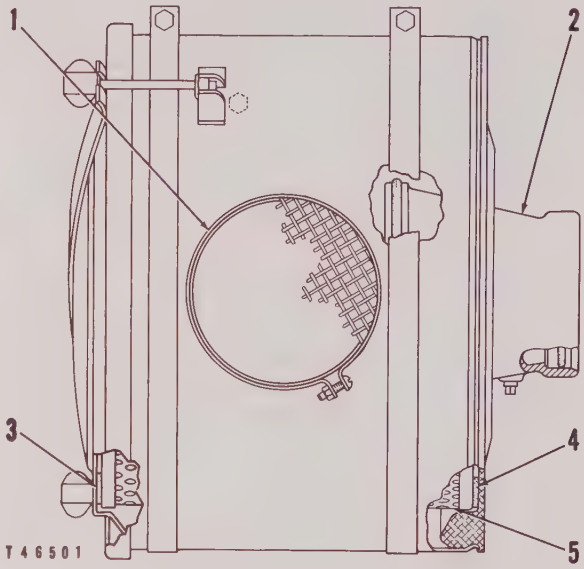

DRY-TYPE AIR CLEANER

1–Air cleaner inlet. 2–Adapter. 3–Gasket. 4–Gasket. 5–Filter element.

Removal and Installation

Loosen the hose clamps **(1)** and lift the air cleaner off the engine after the holding clamps are loosened.

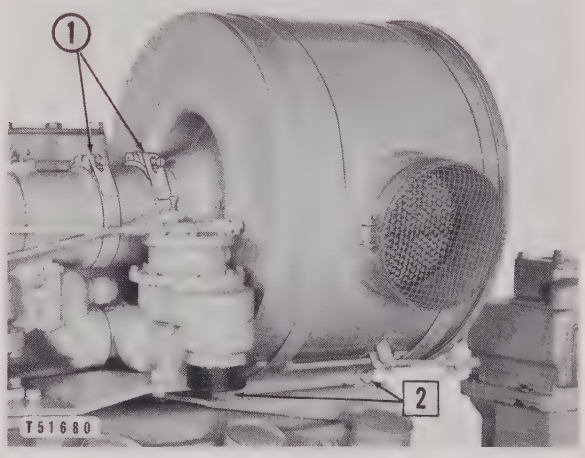

PREPARING TO REMOVE AIR CLEANER

☐ Remove

1–Hose clamps. 2–Clamp bolts.

Install the air cleaner with the hose clamp securely tightened to prevent foreign material entering the air induction stream on the outlet side of the air cleaner.

CAUTION

Do not over-tighten the clamp bolts **(2)** as damage to the case could result.

CARBURETOR

Operation

Air enters the carburetor through air horn **(3)** and fills outer chamber **(4)**. Air enters inner chamber **(7)** (mixing chamber) by forcing diaphragm assembly **(6)** away from ring **(14)**. There are two diaphragms, one on each side of the carburetor. Fuel enters the carburetor through fuel inlet **(2)**, past the power mixture adjustment **(5)** to the center of the carburetor and into fuel outlet tube **(9)**. Fuel valve **(12)** is mounted on diaphragm assembly **(6)**. With the diaphragm assembly forced away from ring **(14)**, fuel flows past fuel valve **(12)** and into inner chamber **(7)**. The fuel and air mix in inner chamber **(7)**. This mixture is drawn down past throttle plate **(16)** and into the inlet manifold.

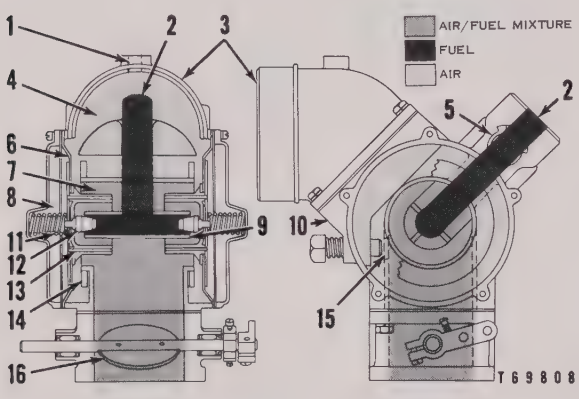

CARBURETOR OPERATION
(Operative position shown)
1–Balance line inlet. 2–Fuel inlet. 3–Air horn. 4–Outer chamber. 5–Power mixture adjustment. 6–Diaphragm assembly (two). 7–Inner chamber. 8–Chamber (two). 9–Fuel outlet tube. 10–Carburetor body. 11–Spring (two). 12–Fuel valve (two). 13–Sensing holes. 14–Ring (two). 15–Idle adjustment opening. 16–Throttle plate.

With the engine stopped, spring **(11)** holds diaphragm assembly **(6)** against ring **(14)** and holds fuel valve **(12)** closed. No air or fuel can flow to inner chamber **(7)**. As the engine is started, the vacuum in the cylinders, created by the intake stroke of the piston, creates a low pressure situation in inner chamber **(7)**. This low pressure is sensed by chamber **(8)**, behind the diaphragm assembly, through holes **(13)**. This allows the pressure in chamber **(8)** to equalize with the low pressure situation in the inner chamber. The higher inlet pressure acting on the outer portion of the diaphragm assembly overcomes the spring force and moves the diaphragm assembly outward. This also moves fuel valve **(12)** outward and allows air and fuel to flow into the inner chamber. A small volume of air is also metered into the inner chamber through idle adjustment opening **(15)**.

When the engine is operating at a constant RPM, the diaphragms remain in one position. This position is determined by the inlet pressure differential of the gas and air. This pressure differential is maintained by a balance line from the line pressure regulator to the carburetor balance line inlet **(1)**. The pressure differential to the carburetor can be varied by adjusting the line pressure regulator. See the topic, LINE PRESSURE REGULATOR.

Removal and Installation

Shut off the fuel supply to the carburetor.

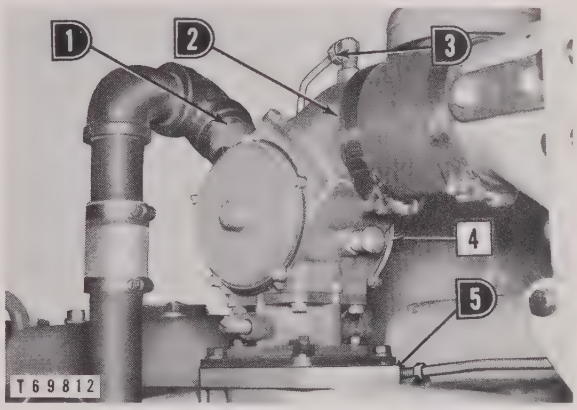

REMOVING CARBURETOR
1–Fuel supply line. 2–Air inlet hose. 3–Balance line. 4–Carburetor. 5–Linkage.

Disassembly and Assembly

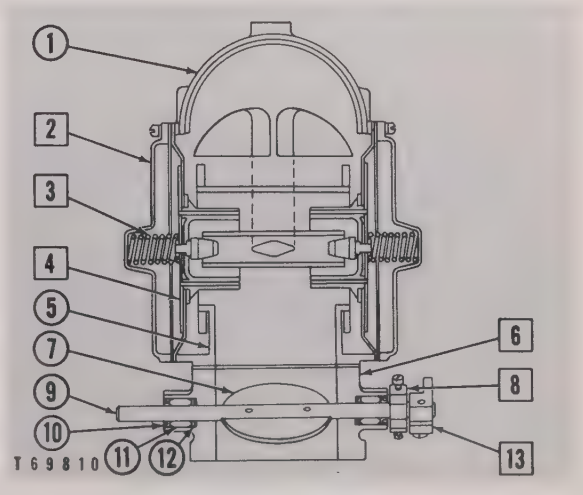

CARBURETOR DISASSEMBLY
1–Air horn. 2–Cover (two). 3–Spring (two). 4–Diaphragm assembly (two). 5–Body assembly. 6–Throttle body assembly. 7–Throttle plate. 8–Lever assembly. 9–Throttle shaft. 10–Seals (two). 11–Bearings (two). 12–Retainer (two). 13–Lever.

1. Remove air horn **(1)** from body assembly **(5)**.

2. Remove idle adjusting screw and spring from body assembly.
3. Remove the screws which secure throttle plate **(7)** to shaft **(9)** and remove shaft. Inspect bearings **(11)**, seals **(10)**, and retainers **(12)**. Replace if necessary.
4. If a new throttle assembly, shaft or lever is installed, pin the lever and shaft together. With the throttle plate in the CLOSED position, install lever **(13)**. Angle **(A)** should be 60°. Drill a .125" dia. hole and through ream for a 2/0 x 1" taper pin. Install linkage to hole **(B)** for mechanical governor and hole **(C)** for Woodward governor.

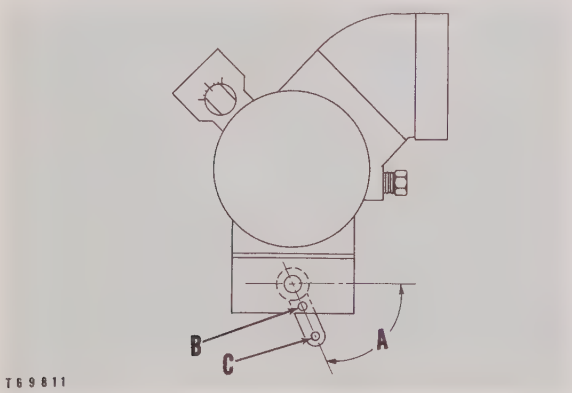

POSITIONING CARBURETOR LEVER
A–60° Angle. B–Hole. C–Hole.

Adjustments

Turn the power adjustment to center between "R" (rich) and "L" (lean). Make fuel mixture adjustments by changing the gas pressure from the line pressure regulator. See topic, LINE PRESSURE REGULATOR.

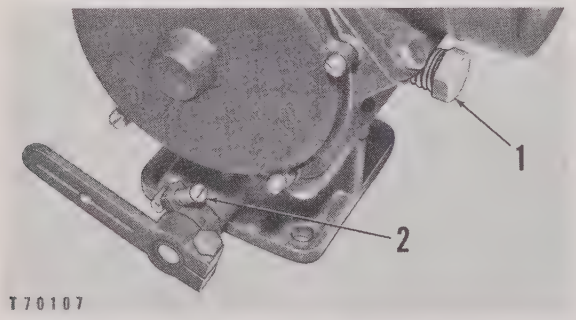

CARBURETOR ADJUSTMENTS
(Carburetor removed for better illustration)
1–Idle adjustment screw. 2–Throttle stop screw.

Turn idle adjustment screw **(1)** four full turns open (from the closed position).

Turn throttle stop screw **(2)**, to obtain desired idle speed. Recommended low idle is 475 RPM. (750 - 800 RPM when used with an electric set).

LINE PRESSURE REGULATOR

A line pressure regulator is required to maintain a constant inlet pressure differential between the gas and air to the carburetor. The pressure differential will vary according to the BTU rating of the gas being used.

Turbocharged and aftercooled engines require a regulator. In addition, naturally aspirated engines with a gas supply pressure exceeding the desired pressure differential to the carburetor, must use a regulator.

Adjustment

1. Make the line pressure regulator adjustment using a water manometer, while the engine is operating.
2. Connect water manometer **(2)** between balance line inlet **(1)** on the carburetor and the fitting on gas supply elbow **(3)**.

NOTE

If a tee is not present at balance line inlet **(1)**, install a tee for use in adjusting gas pressure.

CAUTION

On earlier S201 Regulators, with hole in adjusting screw **(5)**, engine must be operating under no load at idle speed before removing cap **(4)**.

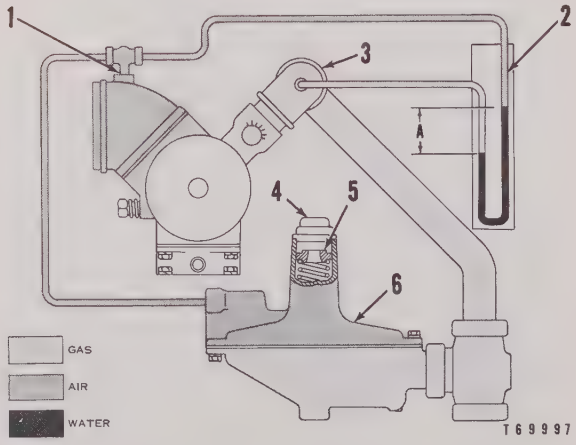

ADJUSTING LINE PRESSURE REGULATOR
1–Balance line inlet. 2–Water manometer. 3–Elbow. 4–Cap. 5–Adjusting screw. 6–Line pressure regulator. A–Pressure differential to be adjusted.

3. Remove cap **(4)** on line pressure regulator **(6)** and turn adjusting screw **(5)** until pressure differential **(A)** is 5½" of water (when using 1000 BTU natural gas).

AIR CLEANER AND MANIFOLDS

See group 3A-10-270.5.

Turbocharger

INTRODUCTION

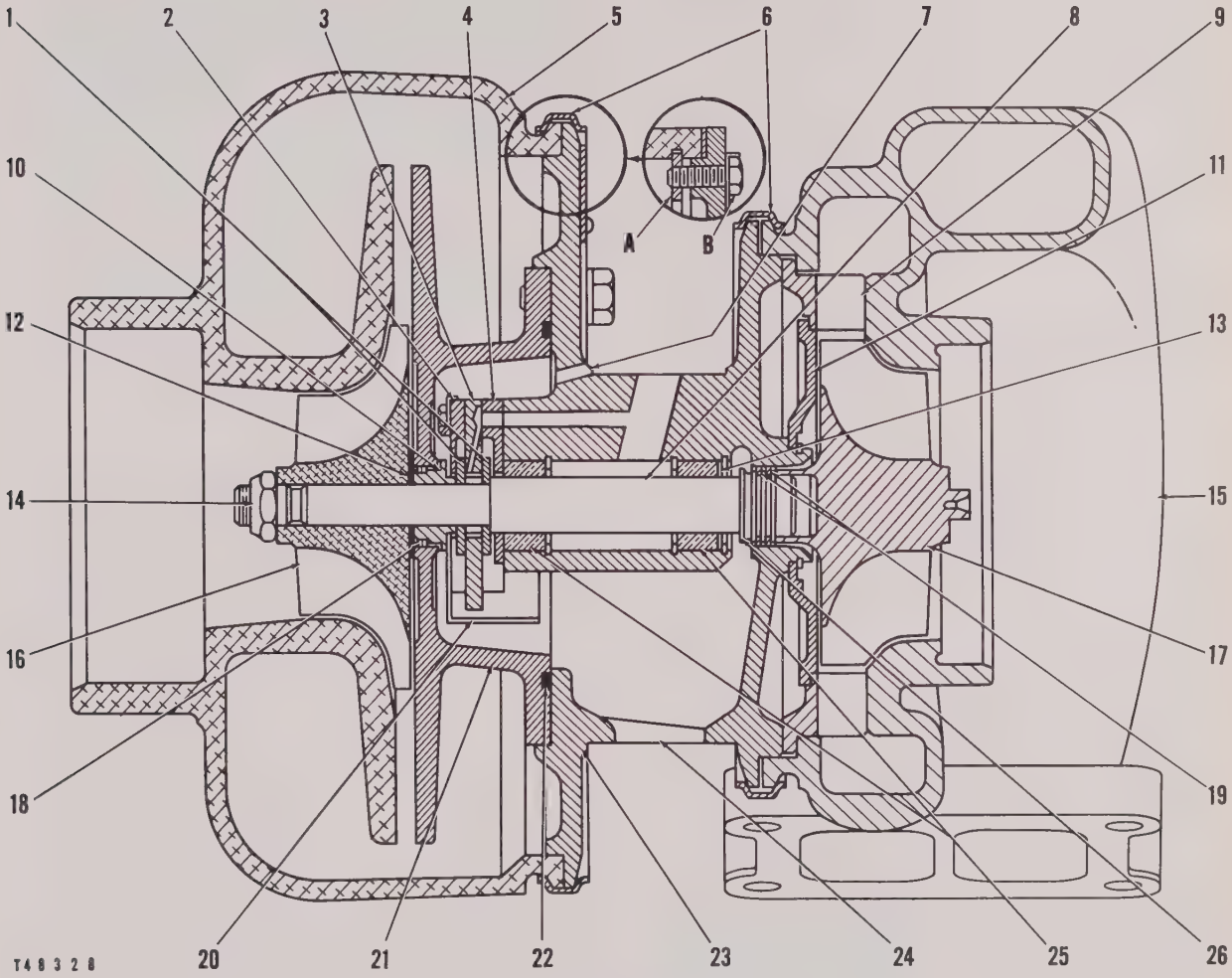

TURBOCHARGER

A–Ring.
B–Bolt.
1–Thrust rings.
2–Retainer.
3–Thrust bearing.
4–Retainer.
5–Compressor cover.
6–Clamps.
7–Oil cavity vent passage.
8–Shaft.
9–Nozzle.
10–Sleeve.
11–Turbine back plate.
12–Shims.
13–Wear washer.
14–Nut.
15–Turbine housing.
16–Compressor impeller.
17–Turbine wheel.
18–Piston ring seals.
19–Piston ring seals.
20–Oil deflector.
21–Compressor back plate.
22–Seal.
23–Bearing housing.
24–Oil drain hole.
25–Bearings.
26–Oil thrower.

The turbocharger is designed to increase the diesel engine power output. The turbocharger absorbs energy from the diesel exhaust gases, and uses this energy to drive the compressor impeller **(16)** for supercharging the diesel engine.

The turbocharger is comprised of a turbine wheel **(17)** and a compressor impeller **(16)** on a rotating shaft **(8)**, a bearing housing **(23)**, a turbine housing **(15)**, compressor cover **(5)**, and a compressor back plate **(21)**.

The turbine wheel is located in the turbine housing and is permanently secured to one end of the shaft. The impeller is secured to the other end of the shaft by a nut **(14)** to form an integral rotating assembly. To assure reliability and freedom from vibration, all parts of the rotating assembly have been carefully dynamically balanced.

The bearing housing **(23)** encloses and supports the rotating assembly and contains the oil inlet hole and oil outlet hole. The turbine housing and compressor cover are mounted to the bearing housing and secured in position by the clamps **(6)**.

NOTE

Some models secure the compressor cover to the bearing housing by means of a ring **(A)** and bolts **(B)** rather than the clamp **(6)**.

A tube, one end of which is connected to the crankcase, is connected to the oil cavity vent passage **(7)**. Venting this area promotes the draining of the oil from the bearing housing, and therefore away from the seals, thus reducing the work-load imposed on the seals.

NOTE

Some earlier engines have a breather connected to the passage **(7)** instead of the vent tube.

The rotating assembly is supported by two full floating pressure lubricated bearings **(25)** located in the bearing housing. Filtered engine oil is supplied to the bearings through passages in the housing in sufficient quantity to lubricate the shaft bearings **(25)** and thrust bearing **(3)**. This oil also aids in the removal of excessive heat. Oil returns from the turbocharger to the crankcase through an external tube at **(24)**. Thrust loads are absorbed by the stationary thrust bearing **(3)** and the rotating thrust rings **(1)**. The oil deflector **(20)** contains and routes the oil thrown from the shaft and thrust rings back to the drain opening **(24)**.

Piston rings **(18)** and **(19)** on either end of the shaft prevent oil from escaping the bearing housing.

The turbine housing, besides housing the turbine wheel, acts as a chamber for the exhaust gases from the diesel engine. The gases are directed through the turbine housing and into contact with the turbine blades by the nozzle **(9)**. Different nozzles are used for different engine applications. For the correct nozzle, see the Rack Setting Charts.

Shims **(12)** are located between the impeller **(16)** and the sleeve **(10)** making it possible to adjust the impeller-to-cover clearance.

The turbocharger is mounted on the exhaust outlet of the diesel engine exhaust manifold. The exhaust gases from the diesel engine pass through the turbine end of the turbocharger before they are discharged into the atmosphere. This flow of exhaust gases through the turbine wheel provides the energy to operate the turbocharger.

During operation, the turbocharger responds to the engine load demands by reacting to the flow of exhaust gases and the corresponding demand of the engine for air.

The exhaust gases enter the turbine housing **(15)** at the exhaust inlet opening and are directed through the vanes of the nozzle **(9)** into contact with the blades of the turbine wheel **(17)**. The exhaust provides the driving force to turn the turbine wheel and the impeller **(16)**.

The turbocharger should always be handled carefully to avoid damage to any of its components.

ALTITUDE OPERATION

The maximum turbocharger speed is determined by the rack setting, the high idle speed setting, the pressure ratio control setting, on engines so equipped, and the altitude at which the engine is operated. The rack setting has been set to permit the engine to be operated at the altitude given on the warning plate on the instrument panel or valve cover. The high idle speed setting is not the same for all altitudes. If the high idle speed or the rack setting is greater than specified for the altitude at which the engine is operated, serious damage to engine or turbocharger parts may result.

The maximum altitude at which the engine can be operated is specified on the altitude warning plate located on the valve cover or instrument panel. The governor housing and turbocharger are sealed to prevent serious engine damage or personal injury due to operation of the engine with incorrect settings or turbocharger nozzle. Changes to the turbocharger, rack setting, or high idle speed should be made only by a Caterpillar dealer serviceman.

The engine can be operated at a lower altitude than specified on the warning plate without danger of engine damage, but with slightly less than maximum performance. When operated at a higher altitude, the rack setting and high idle speed setting must be changed only by a Caterpillar dealer serviceman. After making any changes, the new altitude limit should be stamped on the altitude warning plate.

Also, the new high idle, full load speed, and rack setting should be stamped on the governor warning plate. Reseal the governor housing for continued protection.

SEALING OF THE TURBOCHARGER

The turbocharger is sealed at the factory as shown at **(1)**. Factory installed seals are identified by the letters CT CO. Dealer's sealing tool, 6H4160 Sealing Tool Assembly, will impress the letters DLR on the seals.

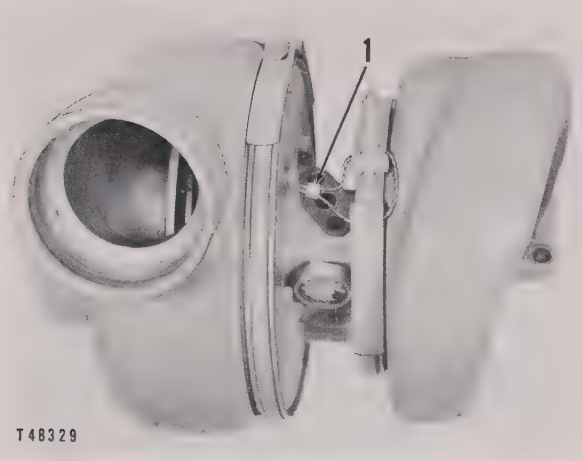

TURBOCHARGER FACTORY SEAL
1–Seal.

The seal **(A)** with which the serviceman reseals the parts differs from the original factory seal **(B)** as illustrated.

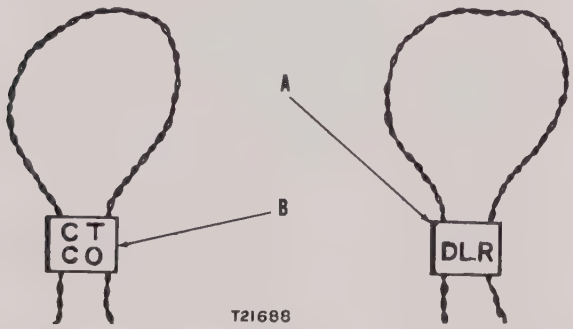

SEALS
A–Dealer replacement seal. B–Original factory seal.

CHECKING BEARING CLEARANCE

A quick check of bearing condition can be made without disassembling the turbocharger. This can be done by inspecting the compressor impeller, turbine wheel, turbine housing and compressor cover. If there is no indication of either the impeller rubbing the compressor cover or the turbine wheel rubbing the turbine housing, the bearing clearances are generally satisfactory.

A more reliable check of bearing condition can be made only when the turbocharger is disassembled and the bearings, shaft journal and housing bore diameter can actually be measured. See the topic, SPECIFICATIONS, for these diameters.

While the turbocharger is disassembled, carefully check the back surfaces of the compressor impeller and turbine wheel for signs of contact with the cover or housing. Contact in these areas would indicate a worn thrust bearing or thrust rings.

CHECKING TURBOCHARGER SHAFT END CLEARANCE

See the topic, SPECIFICATIONS, for normal and permissible shaft end clearance (axial movement). End clearance is checked with a dial indicator, either on the engine or off the engine. If the permissible clearance is exceeded, the turbocharger should be reconditioned.

DISASSEMBLY OF THE TURBOCHARGER

Compressor Cover and Turbine Housing Removal and Installation

1. With all the turbocharger openings covered, wash the exterior of the turbocharger thoroughly with a noninflammable fluid before disassembly.
2. Mark the compressor cover **(1)**, turbine housing **(6)** and bearing housing **(2)**, prior to disassembly, to insure correct positioning upon assembly.

NOTE

On some models the clamp **(3)** is replaced by a ring **(A)** which fits into a groove within the compressor cover **(1)** and is secured to the bearing housing **(2)** by bolts. It is necessary on these models, to remove the bolts and ring prior to removing the compressor cover. Upon assembly it will also be necessary to cement the side of a new gasket **(B)** to the bearing housing. Tighten the bolts to the specified torque as given in the topic, SPECIFICATIONS.

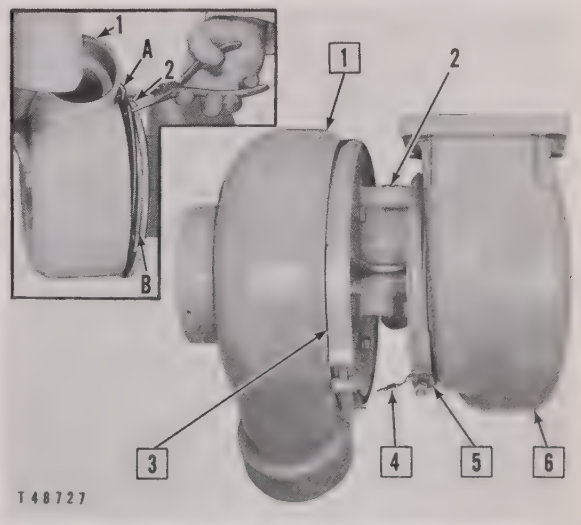

PREPARING TO REMOVE COMPRESSOR COVER AND TURBINE HOUSING

☐ **Remove**

A–Ring. B–Gasket. 1–Compressor cover. 2–Bearing housing. 3–Clamp. 4–Seal. 5–Clamp. 6–Turbine housing.

CAUTION

Use caution when removing the turbine housing to prevent the turbine nozzle **(8)**, which is a loose fit on the turbine back plate **(7)**, from damage by falling.

3. Lift the nozzle **(8)** from the turbine back plate **(7)**.

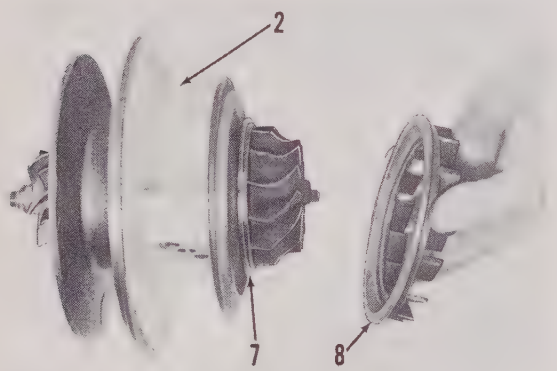

REMOVING NOZZLE
2–Bearing housing. 7–Turbine back plate. 8–Nozzle.

4. Before installing the compressor cover and turbine housing see the topic, CLEANING AND INSPECTION.
5. Complete the assembly. Turn the impeller by hand to be certain there is no rubbing or binding within the turbocharger.

Rotating Parts

Before disassembly of the rotating assembly, measure the shaft end clearance as previously described. If the clearance is excessive, or if either the turbine wheel or impeller has rubbed against the housing or cover, the bearings and/or thrust bearing, and thrust rings must be replaced. Bent impeller blades require replacement of the entire rotating assembly. Turbine blades, which are noticeably bent also require replacement of the rotating assembly.

Bearing failure can damage the shaft journals and/or thrust bearing or rings. Excessive wear or roughness renders the shaft unsuitable for reuse. If the shaft journals measure less than the specified diameter, a new rotating assembly should be installed. Visual inspection and experience are the only ways to determine when the roughness of the shaft prohibits reusing the rotating assembly. New bearings will not correct excessive wear on the thrust bearing or thrust rings.

Installing new bearings does not eliminate the necessity of inspecting and cleaning the rotating parts.

1. Assemble the fixture adapter **(2)** to the fixture **(4)**. Place the bearing housing **(1)**, containing the rotating parts, on the fixture adapter with the turbine wheel down as illustrated.

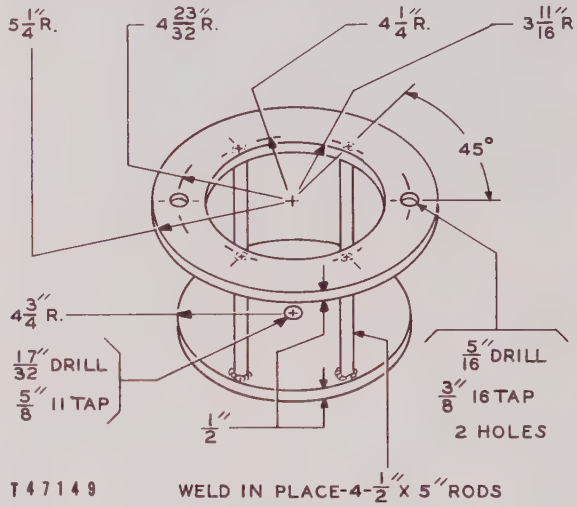

FIXTURE

2. Before removing the impeller, make sure the alignment marks on the impeller and the shaft are visible. If not, mark a small dye line, since all rotating parts should be rematched during reassembly to maintain the previously established dynamic balance of the unit.

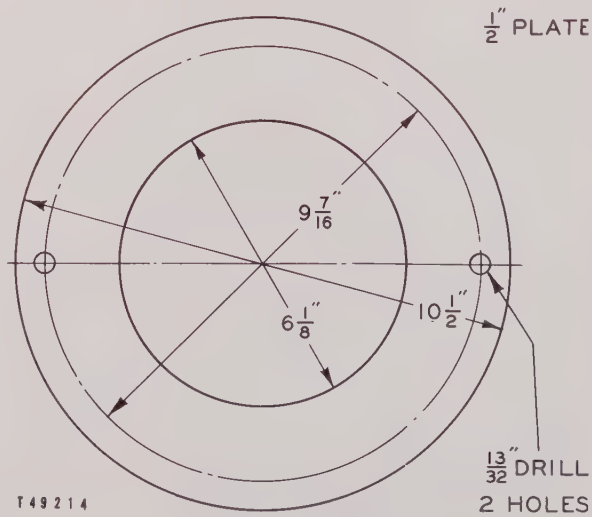

FIXTURE ADAPTER

3. Remove the nut. The rotating assembly may be held stationary by use of a wrench **(3)** as shown.

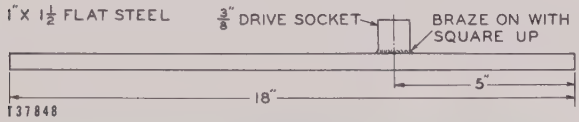

WRENCH

CAUTION

Take care to prevent any distortion of the blades. It is also recommended that a double universal joint be used to prevent possible bending of the shaft.

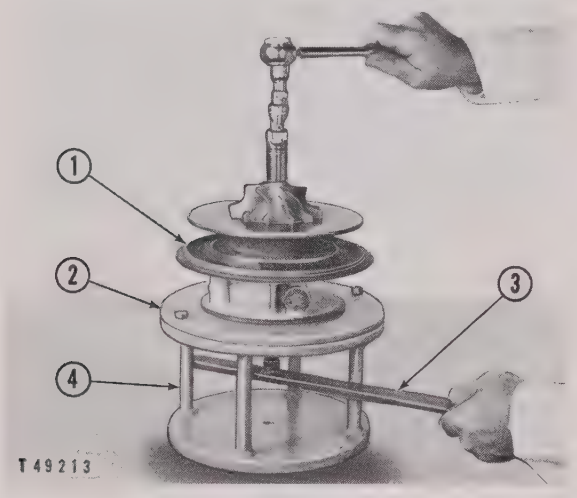

REMOVING NUT

1–Bearing housing. 2–Fixture adapter. 3–Wrench. 4–Fixture.

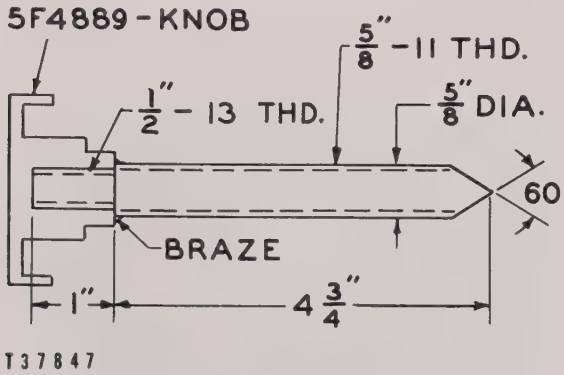

SUPPORTING SCREW

4. Thread the supporting screw **(5)**, shown in illustration, into the base of the fixture to contain the turbine wheel and shaft when pressed from the impeller. Leave a space between the end of the screw and the turbine wheel equal to or slightly greater than the thickness of the impeller. This will allow an unobstructed pressing action on the shaft and still prevent the turbine wheel from being damaged by striking against the fixture base.
5. Using a press and a pin, press the shaft and turbine wheel from the impeller hub as shown.

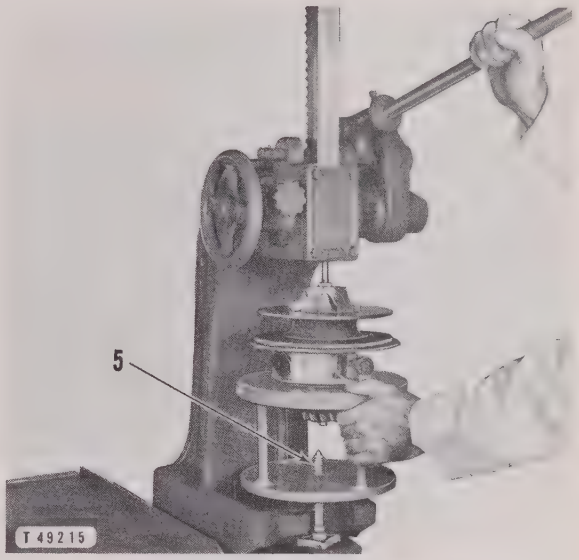

PRESSING SHAFT AND TURBINE WHEEL FROM IMPELLER

5–Supporting screw.

6. Remove the impeller, and the shims from beneath the impeller.
7. Back off the screw **(5)** and remove the bearing housing from the fixture to allow the removal of the turbine wheel and shaft.
8. Measure the shaft journal diameters and inspect the journals for roughness. If the journal diameters are less than specified, the rotating assembly must be replaced. See the topic, SPECIFICATIONS, for correct dimensions.
9. Inspect the piston rings and measure the thickness. Measure the width of the piston ring grooves. See the topic, SPECIFICATIONS.

Bearing Housing

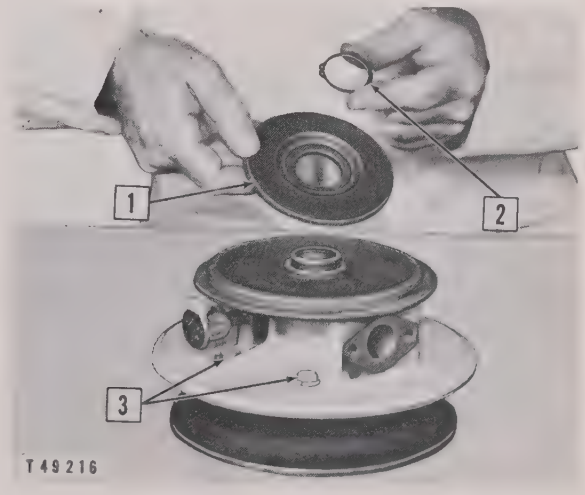

REMOVING TURBINE BACK PLATE

☐ **Remove**

1–Back plate. 2–Snap ring. 3–Bolts (five).

1. Separate the bearing housing **(4)** from the compressor back plate **(6)** and remove the O-ring seal **(5)**.

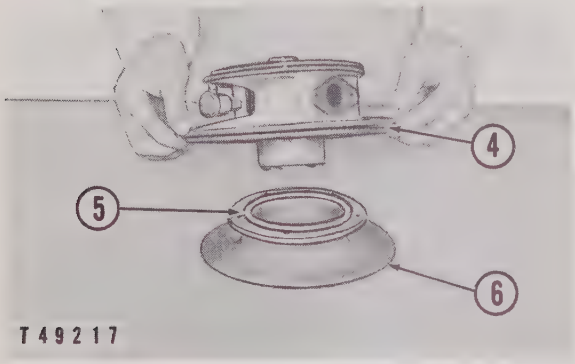

SEPARATING HOUSING AND PLATE
4–Bearing housing. 5–O-ring seal. 6–Compressor back plate.

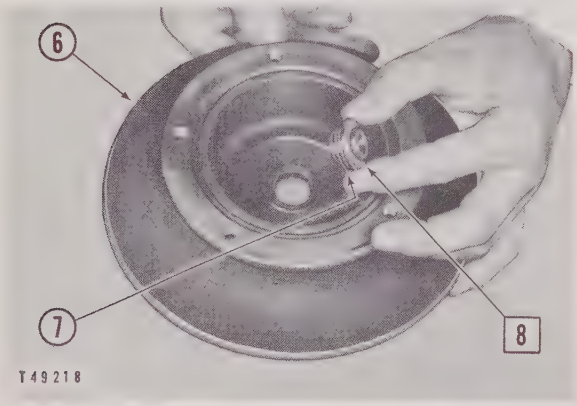

DISASSEMBLING COMPRESSOR BACK PLATE

☐ **Remove**

6–Compressor back plate. 7–Piston ring seals. 8–Sleeve.

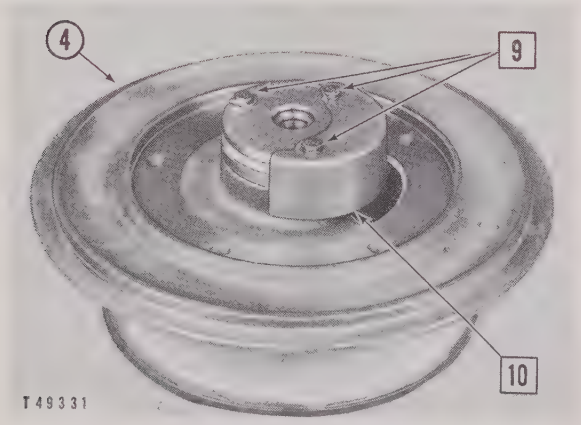

OIL DEFLECTOR REMOVAL

☐ **Remove**

4–Bearing housing. 9–Bolts. 10–Oil deflector.

2. Inspect the piston ring seals **(7)** and measure the thickness. Measure the width of the piston ring groove. See the topic, SPECIFICATIONS.

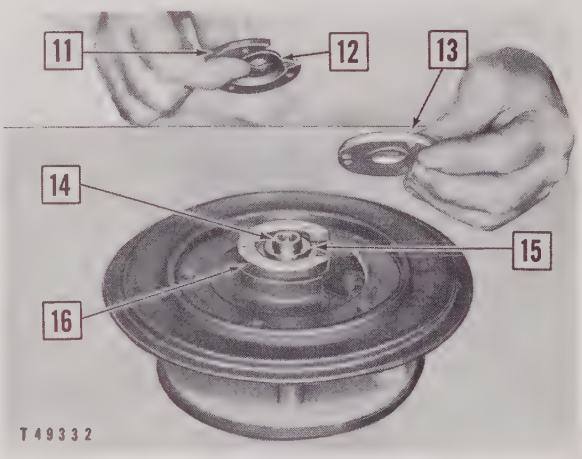

THRUST BEARING REMOVAL

☐ **Remove**

11–Oil retainer. 12–Thrust ring. 13–Thrust bearing. 14–Spacer. 15–Thrust ring. 16–Oil retainer.

3. Remove the outboard snap ring, wear washer, bearing **(17)** and inboard snap ring **(19)** from the bearing housing **(4)**.

NOTE

When assembling, the wear washer should be positioned between the bearing **(17)** and the outboard snap ring.

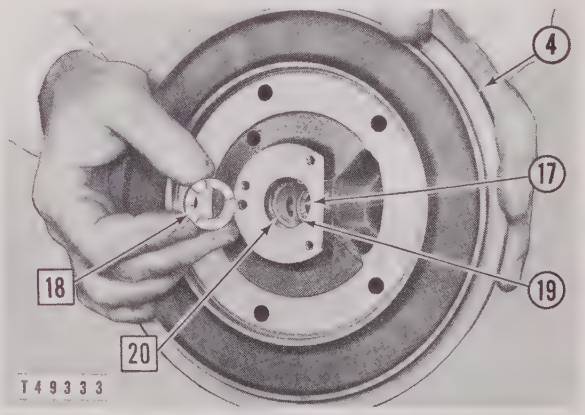

BEARING REMOVAL

☐ **Remove**

4–Bearing housing. 17–Bearing. 18–Bearing. 19–Inboard snap ring. 20–Snap ring.

4. Inspect and measure the thrust rings **(12)** and **(15)**, the thrust bearing **(13)**, the bore in the bearing housing **(4)**, the wear washer and the bearings **(17)** and **(18)**. See the topic, SPECIFICATIONS.

NOTE

The bearings **(17)** and **(18)** must be replaced if either the tip plating is worn off or if they do not measure up to specifications.

5. Replace any worn or damaged parts.

CLEANING AND INSPECTION

Inspect all rotating parts for binding, damage, or evidence of rubbing on adjacent parts. Replace any damaged parts if any of these symptoms are present.

Wash all parts with a cleaning solvent and dry thoroughly. Use a piece of wood to clean the carbon and deposits from the turbine housing and the nozzle.

The turbine wheel must be cleaned with a good cleaning solvent in order to dissolve the carbon. The amount of soaking depends on the amount and type of deposits on the wheel. When hard carbon deposits are formed, soaking in a solvent-type cleaner for an hour or more is required. The loosened particles must all be scraped off with a stiff brush or a specially shaped piece of wood and, if necessary, the whole process repeated. If the wheel is covered with soot only, washing with a stiff brush and cleaning solvent and then rinsing with clean water will be sufficient.

CAUTION

The rotating components must be thoroughly cleaned in order to maintain the critical balance of the unit but do not use a wire brush or wheel.

ASSEMBLING TURBOCHARGER

Before assembling, be certain all parts are thoroughly clean. Extreme care must be taken to keep out dirt and foreign material.

Bearing Housing

Install the snap rings **(4)**, wear washer **(1)** and bearings **(3)** in the bearing housing **(2)** as shown.

CAUTION

Exercise extreme care during installation of the snap rings **(4)** to prevent scratching the bearing housing bore. Each snap ring must be installed with the flat side facing the bearing for which it is acting as a retainer. Lubricate the bearings prior to installation.

Install the back plate **(5)** on the bearing housing **(2)** and secure in place with the snap ring **(6)**.

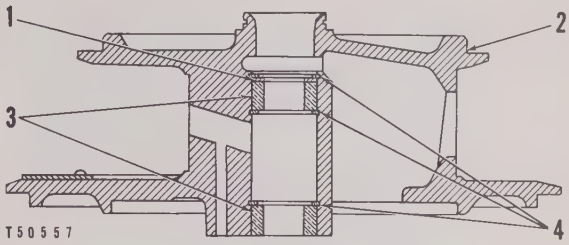

BEARING INSTALLATION
1–Wear washer. 2–Bearing housing. 3–Bearings. 4–Snap rings.

NOTE

The beveled-type snap ring **(6)** must be installed with the flat side toward the back plate. Make certain the ring is secure in the groove.

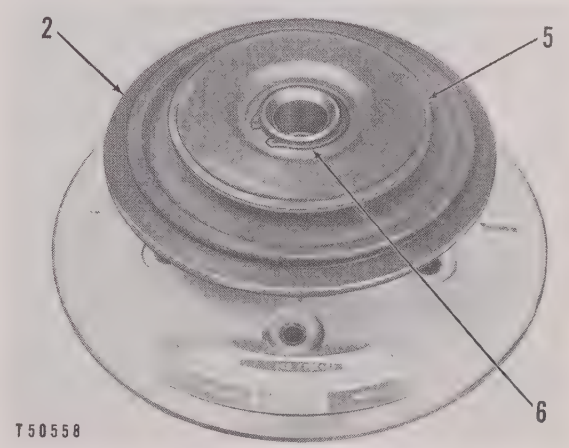

BACK PLATE INSTALLATION
2–Bearing housing. 5–Back plate. 6–Snap ring.

Rotating Parts

1. Lubricate the piston ring grooves and, with the aid of the fabricated ring expander sleeve **(1)**, install the two piston ring seals on the shaft as shown.

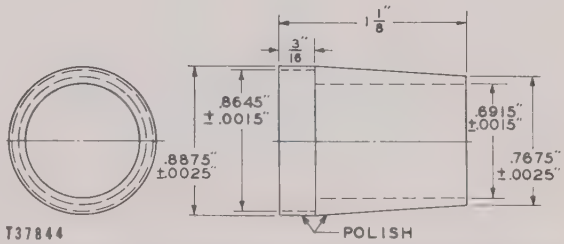

DETAIL FOR FABRICATING RING EXPANDER SLEEVE

2. Remove the sleeve and rotate the rings until the gaps are 180° apart.

INSTALLING PISTON RING SEAL
1–Ring expander sleeve.

3. Center the piston rings on the shaft with the gaps 180° apart and insert the shaft into the turbine end of the bearing housing. If the rings do not enter the housing easily, remove the shaft and recenter the rings.
4. Place the bearing housing **(2)** and shaft **(3)** on the fixture **(4)**, with the aid of the fixture adapter **(5)**, and support the shaft with the support screw **(6)** as shown.
5. Install the oil retainer **(10)**, thrust ring **(9)**, spacer **(8)** and thrust bearing **(7)**.

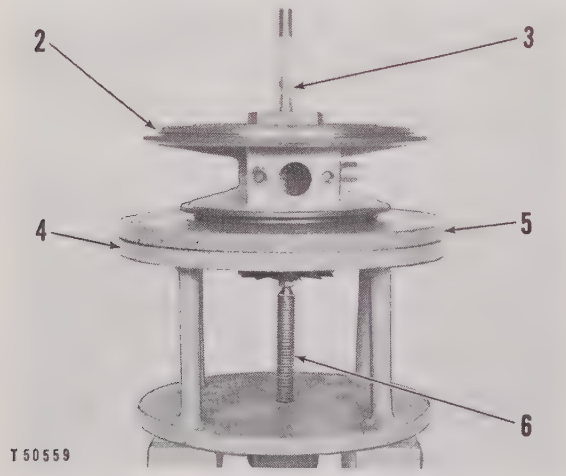

SHAFT INSTALLATION
2–Bearing housing. 3–Shaft. 4–Fixture.
5–Fixture adapter. 6–Support screw.

NOTE

The bolt holes in the oil retainer and thrust bearing are staggered to eliminate the possibility of installing these items incorrectly.

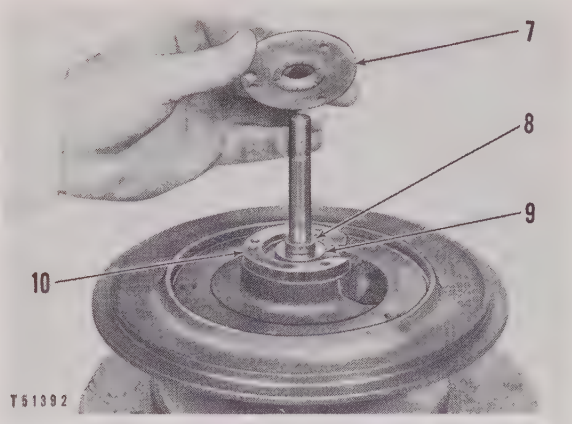

INSTALLING THRUST BEARING
7–Thrust bearing. 8–Spacer. 9–Thrust ring.
10–Oil retainer.

6. Install the thrust ring **(12)** and oil retainer **(11)**.

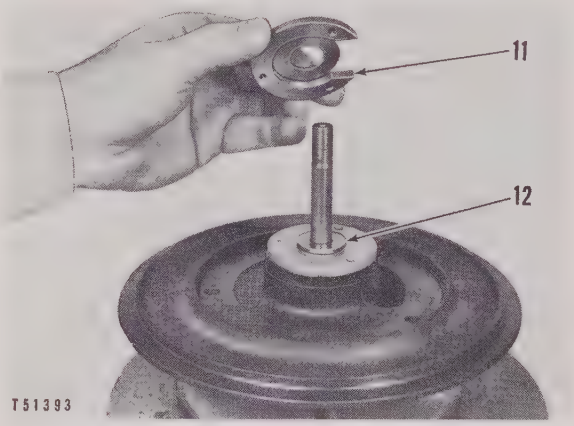

INSTALLING OIL RETAINER
11–Oil retainer. 12–Thrust ring.

7. Install the oil deflector **(17)** and bolts **(16)**. Tighten the bolts and bend the locks to secure them in place.
8. Slip the sleeve **(15)** over the shaft so the end containing the piston ring groove faces away from the bearing housing.
9. If the sleeve **(15)** has an interference fit on the shaft, heat the sleeve in oil at 250° F. for a few minutes to facilitate installation. Allow sleeve to cool before tightening the impeller retaining nut.

NOTE

If the piston ring seals were removed from the sleeve **(15)** it will be necessary to install them again upon installation of the sleeve. If the rings were not removed the sleeve and rings can be installed as a unit.

10. Lubricate the rings and rotate them until their gaps are 180° apart.

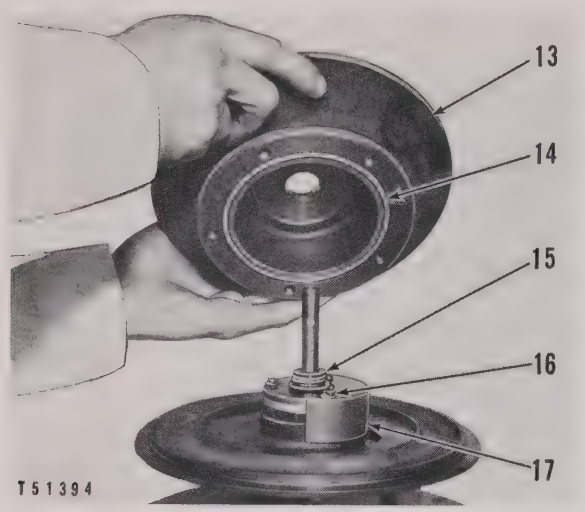

INSTALLING COMPRESSOR BACK PLATE
13–Compressor back plate. 14–O-ring seal. 15–Sleeve. 16–Bolts (three). 17–Oil deflector.

11. Install the O-ring seal **(14)** in the groove provided in the compressor back plate **(13)** and place the back plate over the shaft, carefully lowering it to the assembled position. Tighten the bolts securing the back plate in this position. See the topic, SPECIFICATIONS.

CAUTION

Use care when seating the piston rings in the compressor back plate bore to prevent ring breakage. Do not force the rings into the bore.

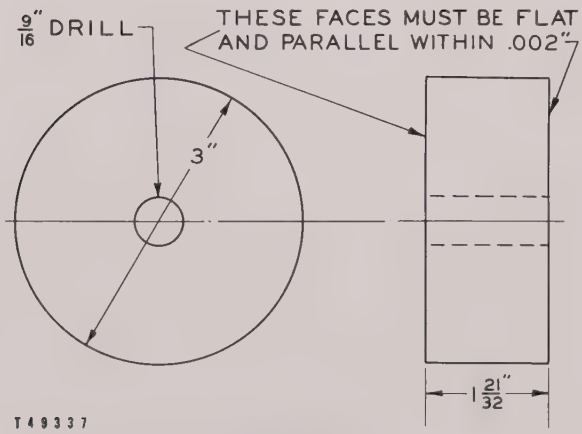

SPACER BLOCK

12. Place the approximate amount of shims needed on the shaft and install the spacer block **(19)** and nut **(18)** as shown. Tighten the nut to the specified torque.

13. Using a thickness gauge **(20)** on each side of the spacer block as illustrated, check the impeller to compressor back plate clearance. This should be measured with the block pushed toward the impeller end. This clearance is regulated by the shims under the impeller; add or remove shims as required. See the topic, SPECIFICATIONS, for correct clearance.

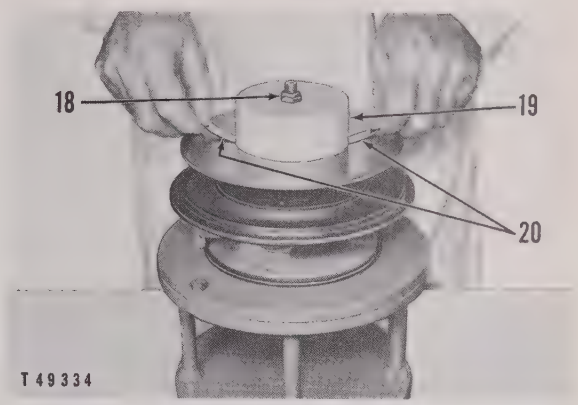

CHECKING IMPELLER TO HOUSING CLEARANCE
18–Nut. 19–Spacer block. 20–Thickness gauges.

14. Remove the nut **(18)** and spacer block **(19)**.

15. Heat the impeller in oil at 375° F. for 10 minutes.

CAUTION

Additional heating should be avoided since excessive heating can change the heat treat characteristics of the impeller.

16. After 10 minutes of heating, using asbestos gloves to handle the impeller, quickly install the impeller on the shaft. Care must be exercised to make certain the assembly mark on the impeller is aligned with the mark on the shaft before it is pushed onto the shaft.

NOTE

Make certain the support screw pushes the shaft firmly toward the impeller end during this operation. Also make certain the impeller bottoms on the shaft.

17. After the impeller has cooled to less than 150° F., install the nut as illustrated and tighten to the specified torque. See the topic, SPECIFICATIONS.

CAUTION

Use a double universal joint to prevent bending of the shaft.

18. Recheck the impeller to back plate clearance by placing the appropriate thickness gauge under

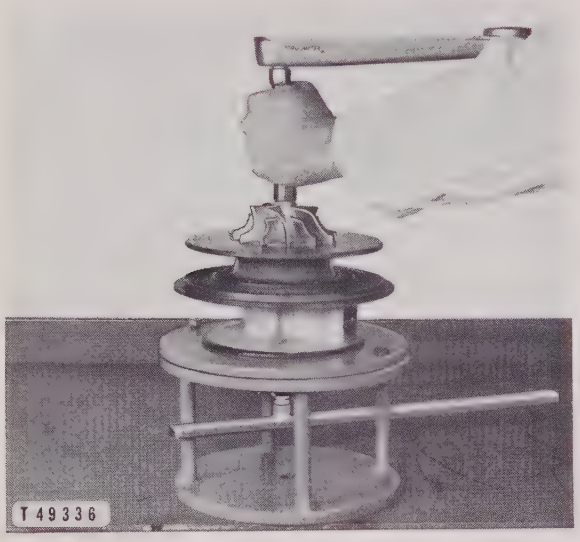

INSTALLING NUT

the impeller wheel. Also check again for proper end clearance.

19. Make a final inspection to determine if any blades have been accidentally damaged or bent during the assembly operation.

20. Install the nozzle, turbine housing and compres sor cover.

Turbocharger

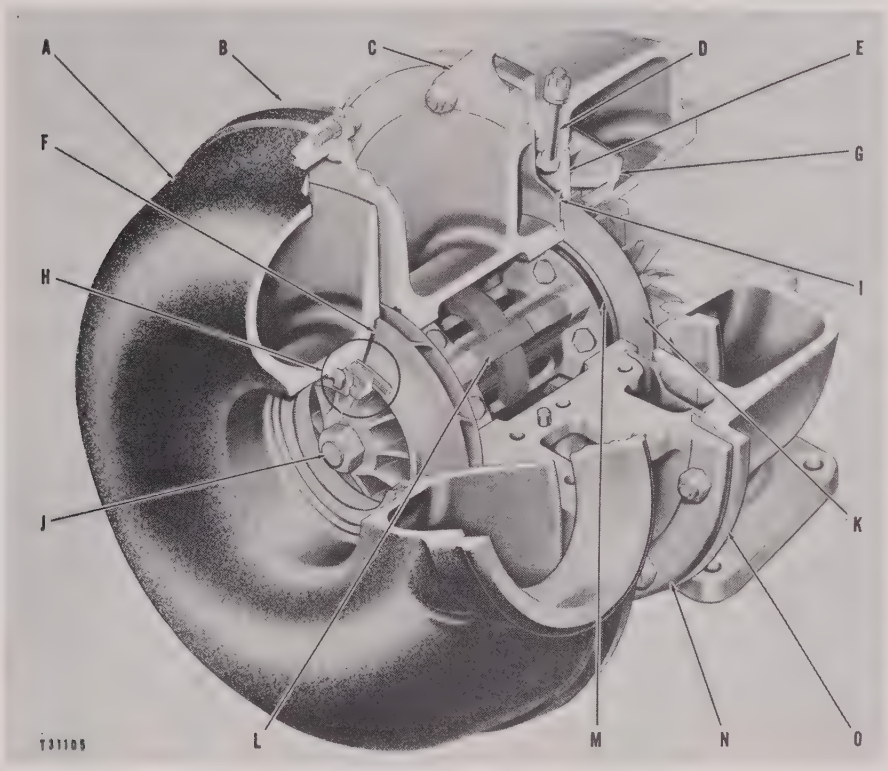

TURBOCHARGER (CUTAWAY VIEW)
A–Compressor housing. B–Upper half of main housing. C–Lifting bracket. D–Nozzle retaining bolt. E–Nozzle shroud. F–Impeller. G–Nozzle. H–Seal assembly. I–Heat shields. J–Rotating assembly. K–Turbine wheel. L–Bearing carrier. M–Packing. N–Lower half of main housing. O–Turbine housing.

INTRODUCTION

The turbocharger is designed to increase the diesel engine power output. The turbocharger absorbs energy from the diesel exhaust gases, and uses this energy to drive the turbocharger compressor for supercharging the diesel engine.

The turbocharger is basically comprised of a cartridge assembly **(22)**, two piece main housing **(4)** and **(24)**, turbine housing **(25)**, and compressor housing **(1)**. The cartridge assembly contains the impeller **(12)** and the turbine wheel **(13)**.

The turbine wheel **(13)** is located in the turbine housing **(25)** and is fastened to one end of a shaft. The impeller **(12)** is secured to the other end of the shaft to form an integral rotating assembly. To assure reliability and freedom from vibration, the entire rotating assembly has been carefully dynamically balanced.

The rotating assembly is supported by two pressure-lubricated bearings housed in a two-section bearing carrier. Engine oil is supplied to the bearings, through passages in the carrier in sufficient quantity to lubricate the bearings and to aid in the removal of excessive heat.

The main housing is a two-section casting consisting of an upper half **(4)** and a lower half **(24)** bolted together. The main housing encloses and supports the cartridge assembly and provides the lubricating oil inlet **(21)** and outlet connections. The O-ring seal **(2)** and the carrier packing **(15)** provide a means of sealing the bearing carrier in the main housing. The main housing also serves to mount the turbine housing and the compressor housing.

Seals located in the cartridge assembly and located behind the turbine wheel and impeller, serve to prevent lubricating oil from entering the compressor or the turbine.

NOTE

Earlier units have labyrinth type seals and later units have screw type seals.

The turbine housing, besides housing the turbine wheel, acts as a collecting chamber for the exhaust

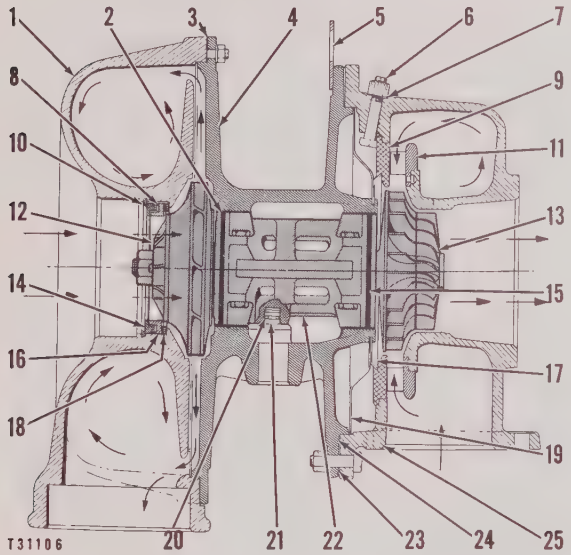

CROSS-SECTION OF TURBOCHARGER

1–Compressor housing. 2–Carrier O-ring seal. 3–Gasket. 4–Upper half of main housing. 5–Lifting bracket. 6–Nozzle retaining bolt and nut. 7–Nozzle retaining bolt gasket. 8–Wave Washer. 9–Nozzle shroud. 10–Snap ring. 11–Nozzle. 12–Impeller. 13–Turbine wheel. 14–Guard ring. 15–Carrier packing. 16–Seal. 17–Heat shield. 18–Shims. 19–Heat shield. 20–Oil inlet tube O-ring. 21–Oil inlet tube. 22–Cartridge assembly. 23–Shims. 24–Lower half of main housing. 25–Turbine housing.

gases from the diesel engine. The gases are directed through the turbine housing and into contact with the turbine blades by the nozzle **(11)**. The heat shields **(17)** and **(19)** control and defect the heat away from the cartridge assembly.

Shims **(23)** are located between the main housing and the turbine housing and provide a means to adjust the clearance between the turbine wheel and the turbine housing.

The nozzle shroud **(9)** and the nozzle **(11)** are secured in the turbine housing by the bolts and nuts **(6)**. The gaskets **(7)** form a seal between the nuts and the turbine housing to prevent exhaust leakage.

The impeller **(12)** is housed in the compressor housing **(1)**. The gasket **(3)** provides a seal between the compressor housing and the main housing. Located at the inlet end of the compressor housing is a replaceable impeller seal.

The impeller seal consists of the following parts: guard ring **(14)**, wave washer **(8)** seal **(16)** and a thin and thick shim **(18)**. The seal assembly is held in place by the snap ring **(10)**.

The turbocharger should always be handled carefully to avoid damage. Lifting bracket **(5)** is provided for use when handling the turbocharger.

OPERATION AND LUBRICATION

A brief description of the operation of the turbocharger is as follows:

The exhaust gases enter the turbine housing **(4)** at the inlet passage **(12)** and are directed through the vanes of the nozzle **(3)** into contact with the turbine wheel blades **(6)**. The exhaust energy provides the driving force to turn the turbine wheel and the impeller **(2)**. The exhaust is expelled from the turbine housing at the outlet **(8)**.

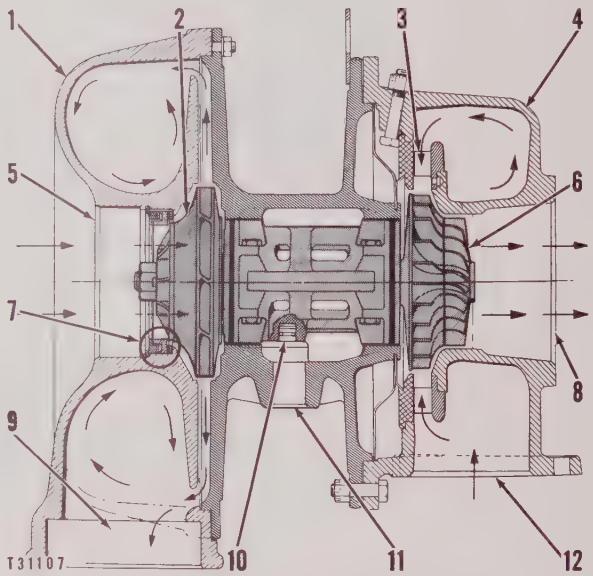

OPERATION AND LUBRICATION

1–Compressor housing. 2–Impeller. 3–Nozzle. 4–Turbine housing. 5–Inlet air opening. 6–Turbine wheel. 7–Impeller seal. 8–Exhaust outlet. 9–Compressed air outlet. 10–Oil inlet. 11–Oil outlet. 12–Exhaust inlet.

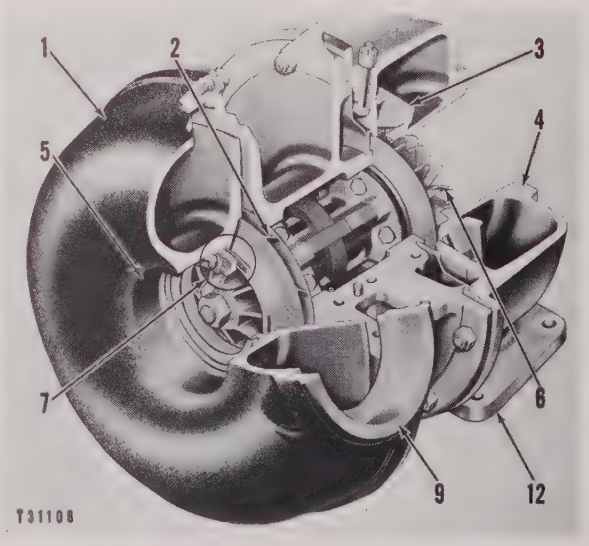

TURBOCHARGER (CUTAWAY VIEW)

1–Compressor housing. 2–Impeller. 3–Nozzle. 4–Turbine housing. 5–Inlet air opening. 6–Turbine wheel. 7–Impeller seal assembly. 9–Compressed air outlet. 12–Exhaust inlet opening.

Inlet air from the air cleaner passes through the opening **(5)** of the compressor housing **(1)** and the impeller **(2)**. The air is compressed as it passes through the compressor housing and out the outlet **(9)** where it passes into the inlet manifold of the diesel engine. The impeller seal assembly **(7)** is provided to prevent leakage around the impeller.

The bearings of the cartridge assembly are lubricated by oil from the diesel engine. The inlet **(10)** transmits the oil to the bearings and the oil returns to the diesel engine through the outlet **(11)**.

ALTITUDE OPERATION

The maximum turbocharger speed is determined by the rack setting, the high idle speed setting and the altitude at which the engine is operated. The rack setting has been set to permit the engine to be operated at the altitude given on the warning plate on the instrument panel or valve cover. The high idle speed setting is not the same for all altitudes. If the high idle speed or the rack setting is greater than specified for the altitude at which the engine is operated, **serious damage to engine or turbocharger parts may result.**

The maximum altitude at which the engine can be operated is specified on the altitude warning plate located on the valve cover or instrument panel. The governor housing and turbocharger are sealed to prevent serious engine damage or personal injury due to operation of the engine with incorrect settings or turbocharger nozzle. **Changes to the turbocharger, rack setting, or high idle speed should be made only by a Caterpillar dealer serviceman.**

The engine can be operated at a lower altitude than specified on the warning plate without danger of engine damage, but with slightly less than maximum performance. **When operated at a higher altitude, the rack setting and high idle speed setting must be changed only by a Caterpillar dealer serviceman.** After making any changes, the new altitude limit should be stamped on the altitude warning plate.

Also, the new high idle, full load speed, and rack setting should be stamped on the governor warning plate. Reseal the governor housing for continued protection.

STRAINER REMOVAL AND INSTALLATION

To obtain maximum service, cleanliness must be the rule. Be careful to avoid introducing dirt into the turbocharger bearings.

1. Remove the bolts which secure the turbocharger oil supply line **(3)** and move the oil line away from the housing **(1)**.

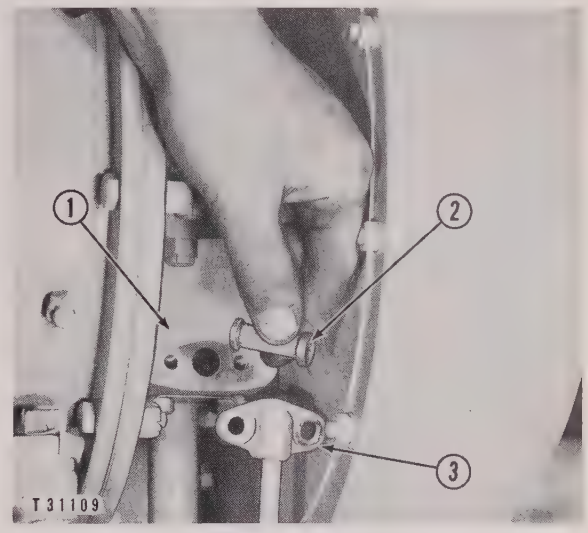

REMOVING STRAINER
1–Housing. 2–Strainer. 3–Oil line.

2. Remove the strainer **(2)** and clean.
3. Install the strainer with the open end out toward the oil supply line and with the soldered joint of the screen at the bottom of the opening in the housing.
4. Replace the gasket between the oil supply line and the housing if it is damaged or has been leaking lubricant.

SEALING OF THE TURBOCHARGER

The turbocharger is sealed at the factory as shown at **(1)**. Factory installed seals are identified by the letters CT CO. Dealer's sealing tool, 6H4160 Sealing Tool Assembly, will impress the letters DLR on the seals.

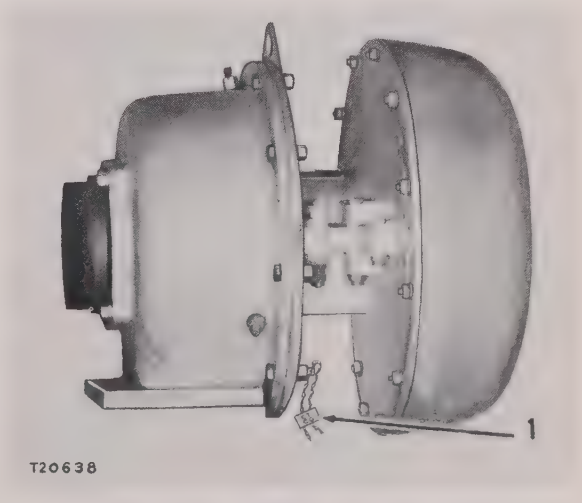

TURBOCHARGER FACTORY SEAL
1–Seal.

The seal **(A)** with which the serviceman reseals these parts differs from the original factory seal **(B)** as illustrated.

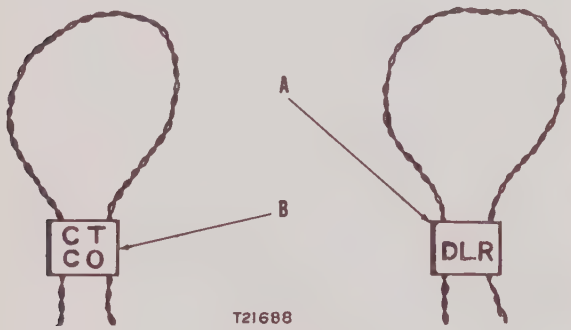

SEALS
A–Dealer replacement seal. B–Original factory seal.

CHECKING TURBOCHARGER CARTRIDGE BEARING CLEARANCE

Excessive bearing radial or end clearance is the criteria for replacing bearings. If either clearance is excessive, measured as shown, replace the bearings as described in the topic, REPLACING CARTRIDGE BEARINGS.

Checking Clearance with Turbocharger Assembled

The radial clearance between the bearings and the shaft, and end clearance in the cartridge assembly can be checked without removing the turbocharger from the diesel engine.

1. Remove the air cleaner transfer pipe and the exhaust pipe.
2. Remove any other equipment which prevents access to the turbocharger.
3. Remove the exhaust pipe elbow from the center section of the manifold.
4. Remove the adapter from the turbine housing.
5. Move the turbine wheel **(1)** in to remove the end clearance.
6. The bearing clearance can be checked by setting up a dial indicator with a universal attachment as shown.
7. While holding the opposite end of the rotating assembly stationary, raise and lower the turbine wheel carefully with a block of wood against the hub as shown. If the indicator reading is more than .012", the turbocharger should be removed and disassembled as described in the covering topics, and the necessary new parts installed.

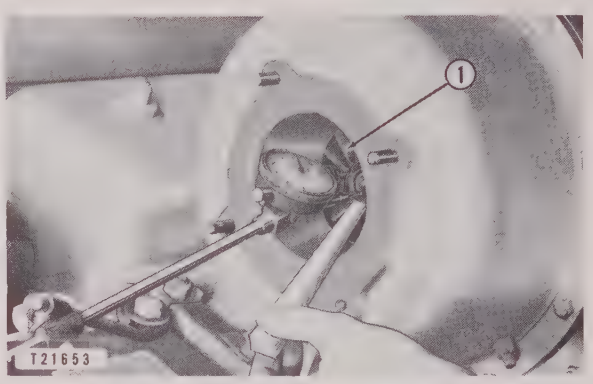

CHECKING BEARING RADIAL CLEARANCE
1–Turbine wheel.

8. Measure the impeller bearing radial clearance in a similar manner, with the indicator touching the flat side of the nut, as shown in the following topic. End clearance must all be taken out in one direction, and the shaft must not turn, as a false reading will be obtained. Permissible clearance is .012".
9. Bearing end clearance (axial movement) is measured directly on the end of the shaft. Permissible end clearance is .012".

Checking Clearance with Cartridge Removed

The bearing carrier **(1)** should be held stationary in a wood V-block or cradle. Mount a dial indicator as shown. With one hand, hold the opposite end stationary and push out all shaft end clearance in one direction. Use the other hand to raise and lower the end being checked. Total indicator movement should not exceed .012".

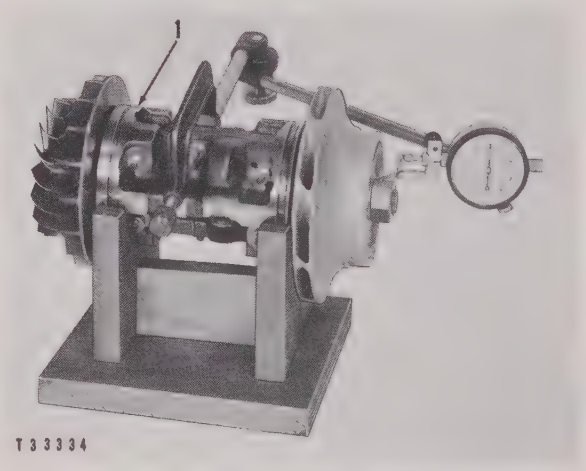

CHECKING BEARING RADIAL CLEARANCE ON IMPELLER END
1–Bearing carrier.

NOTE

Exercise care not to rotate the shaft when checking the bearing radial clearance, since this will give a false reading, especially if indicating on the flat side of the impeller nut.

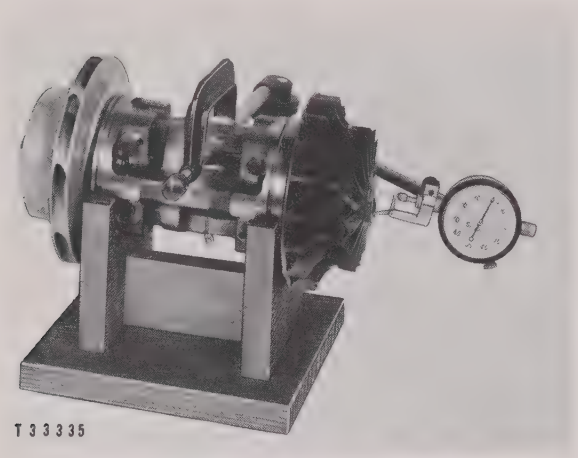

CHECKING BEARING RADIAL CLEARANCE ON TURBINE END

To check bearing end clearance, mount the dial indicator as shown. With the carrier held stationary, move the rotating assembly in an axial direction and measure the shaft movement directly on the end of the shaft.

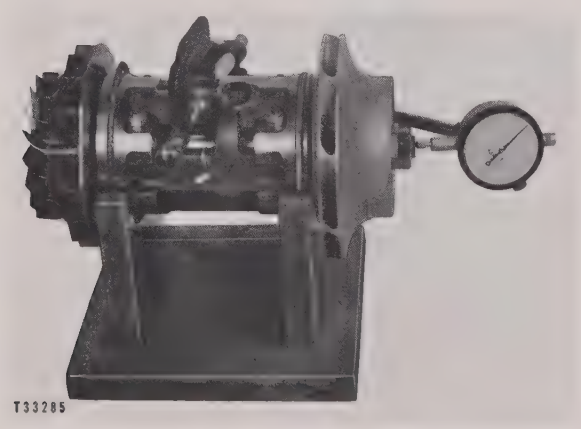

CHECKING BEARING END CLEARANCE

DISASSEMBLING TURBOCHARGER

Compressor Housing Removal

1. Remove the snap ring **(1)** and then lift out the guard ring **(3)** and the wave washer **(4)**.
2. Remove the seal **(5)** and the shims **(2)**.
3. Remove the nuts holding the compressor housing **(7)** to the flanges **(6)** of the main housing upper and lower halves **(8)** and **(9)**.

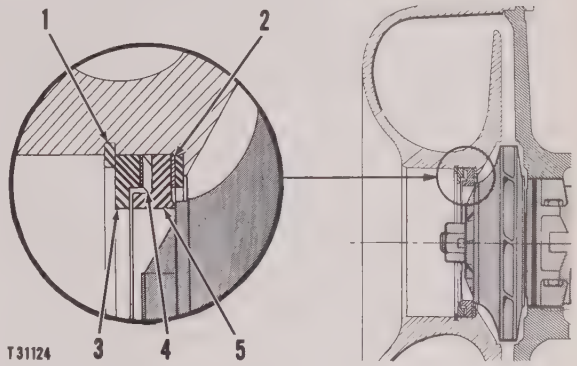

IMPELLER SEAL (LATER TYPE)
1–Snap ring. 2–Shims. 3–Guard ring. 4–Wave Washer. 5–Seal.

4. Remove the compressor housing and gasket.

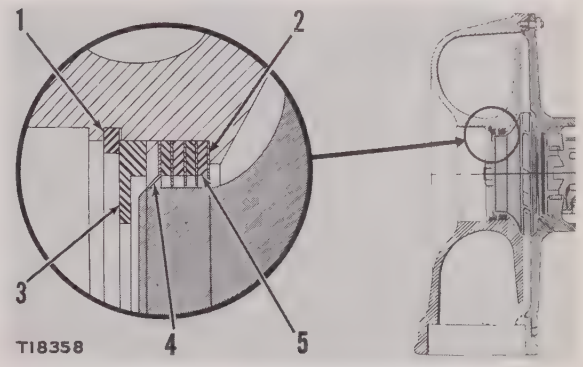

IMPELLER SEAL (Earlier Type)
1–Snap ring. 2–Gland. 3–Guard ring. 4–Wave washer. 5–Spacer.

NOTE

Earlier turbochargers have a different type seal. There are 4 spacers **(5)** and 4 glands **(2)** alternately installed into the compressor housing.

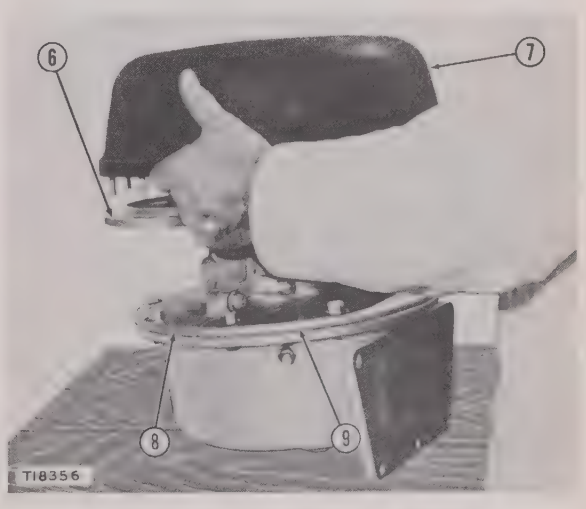

REMOVING COMPRESSOR HOUSING
6–Flange. 7–Compressor housing. 8–Upper half of main housing. 9–Lower half of main housing.

Turbine Housing and Nozzle Removal

CAUTION

Before removing the turbine housing from the main housing refer to the topic, SEALING THE TURBOCHARGER.

1. Remove the bolts and nuts which secure the turbine housing **(1)** to the main housing **(3)**. Match mark the flanges on both housings for reassembling in the same position.
2. Being careful not to damage the shims **(2)** between the turbine housing and the main housing, remove the turbine housing.

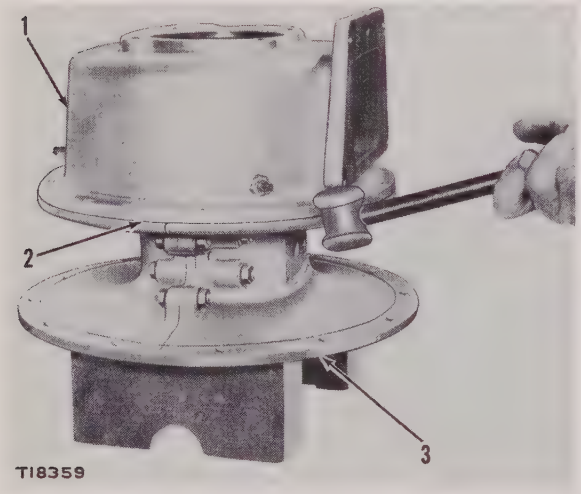

REMOVING THE TURBINE HOUSING
1–Turbine housing. 2–Shims. 3–Main housing.

CAUTION

It may be necessary to loosen the turbine housing by striking with a soft hammer on the flange as shown. Take care to prevent inadvertently raising the housing and letting it fall, causing possible damage to the turbine wheel blades.

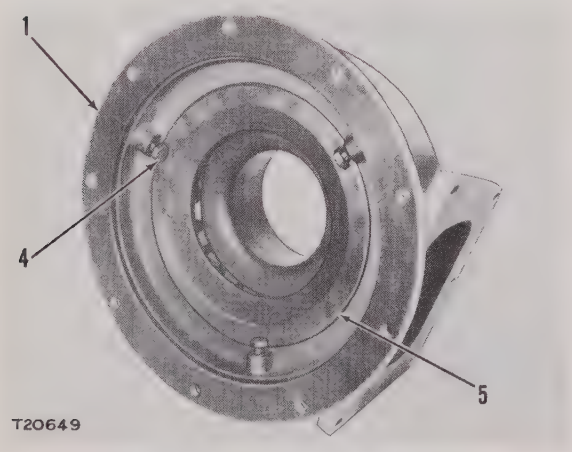

REMOVING THE NOZZLE SHROUD
1–Turbine housing. 4–Bolt. 5–Nozzle shroud.

3. Remove the shims **(2)** from the main housing.
4. Remove the heat shields from the main housing.
5. Remove the bolts **(4)** and remove the nozzle shroud **(5)**.

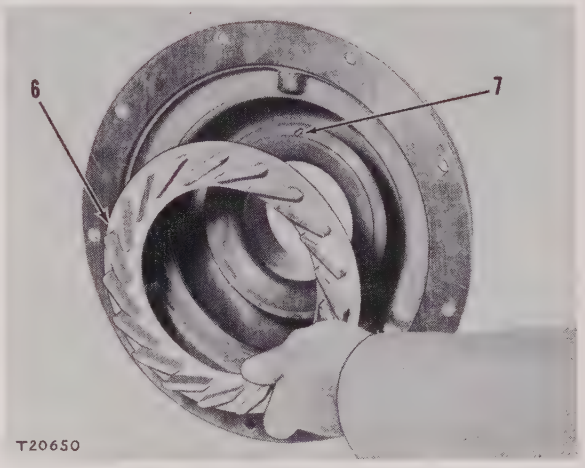

REMOVING THE NOZZLE
6–Nozzle. 7–Locating hole.

6. Lift the nozzle **(6)** from the turbine housing.

NOTE

The nozzle is located in the turbine housing by the use of a locating pin which fits into the hole **(7)**. When removing the nozzle, check to see if the pin remains in the nozzle. Care should be exercised to prevent the locating pin from falling into the turbine housing unnoticed.

Cartridge Assembly Removal

1. Remove the bolts and nuts which secure the upper half **(1)** to the lower half **(3)** of the main housing.
2. Separate the two halves. To prevent binding, it is necessary to drive the dowel pins **(6)** into the lower half **(3)** of the main housing.
3. Remove the cartridge assembly **(2)**. (The impeller **(4)**, turbine wheel **(5)**, and the shaft are the rotating parts of the cartridge assembly and they should be handled carefully.)

CAUTION

Particular care should be taken to prevent damage to the turbine wheel. Do not rest the cartridge on the turbine vanes. If a build-up of dirt or deposits on the impeller is excessive, refer to the topic, CLEANING AND INSPECTION.

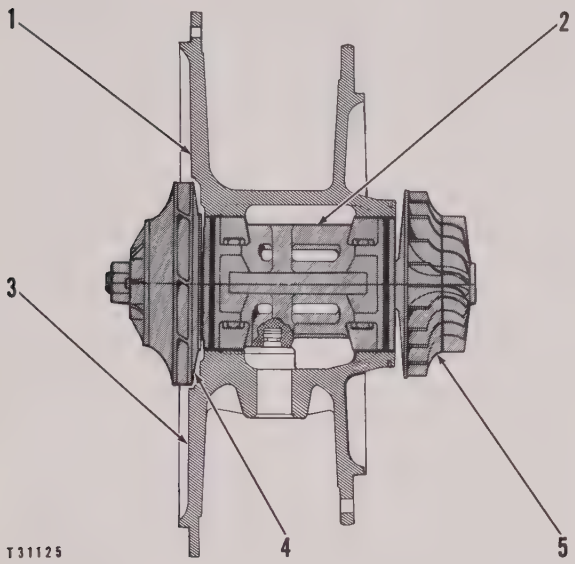

PREPARING TO REMOVE THE CARTRIDGE ASSEMBLY
1–Upper half of the main housing. 2–Cartridge assembly. 3–Lower half of main housing. 4–Impeller. 5–Turbine wheel.

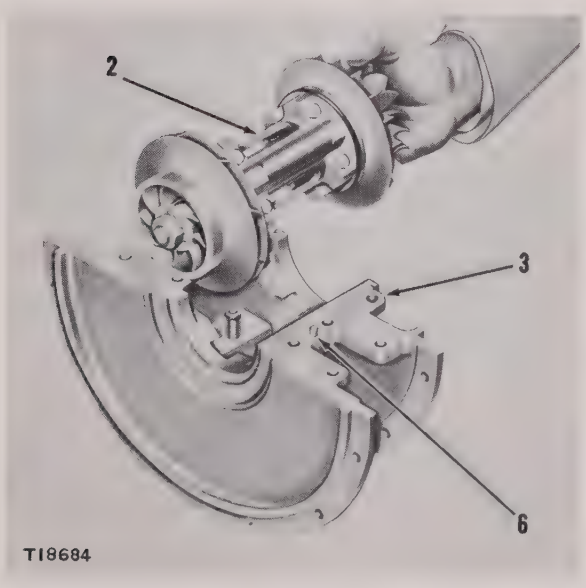

REMOVING THE CARTRIDGE ASSEMBLY
(Earlier Type Shown)
2–Cartridge assembly. 3–Lower half of the main housing. 6–Dowel.

Replacing Cartridge Bearings

Turbocharger bearing radial clearance and end clearance should first be checked as described in the covering topics. If either clearance exceeds .012″, and neither the turbine wheel nor the impeller has rubbed against the turbocharger housings, new bearing assemblies should be installed if the shaft is in good condition. Bearing failure can damage the shaft journals and/or thrust surfaces on the shaft. Excessive wear or roughness renders the shaft unsuitable for reuse. If the shaft journals do not measure .7995″ to .8000″ in diameter, a new cartridge assembly should be installed. Visual inspection and experience is the only way to determine when the roughness of the shaft prohibits reusing the rotating assembly. New bearings will not correct excessive wear on the thrust surfaces of the shaft.

Installing new bearings does not preclude the necessity of inspecting and cleaning the rotating parts as described in the topic, CLEANING AND INSPECTION.

1. Remove the aluminum seal **(5)**, O-ring **(3)**, and packing **(1)** from the carrier.
2. Remove the nuts **(2)** from the four bolts holding the two carrier halves together.
3. Support the cartridge only on the bearing carrier as shown. The wheels should turn freely. Next, drive the two dowels located in the holes **(4)** into the upper half of the bearing carrier. Some units have four dowels, one in each corner of the carrier. The oil inlet is located in the lower half of the carrier.

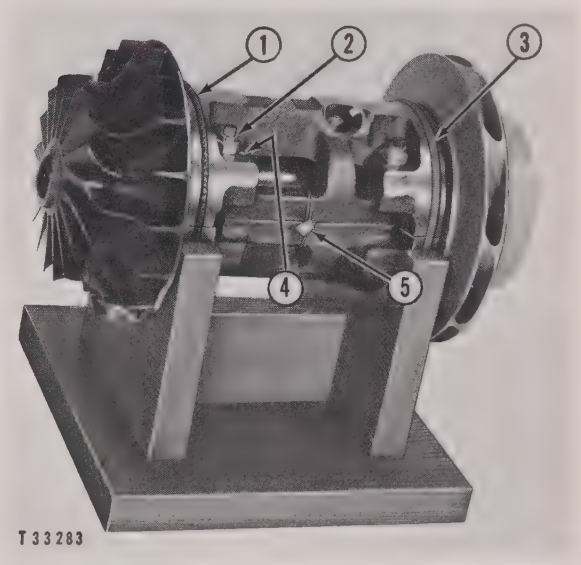

PREPARING TO REPLACE BEARINGS
1–Packing. 2–Nut. 3–O-ring seal. 4–Dowel hole. 5–Aluminum seal.

4. Tap the carrier at the parting line with a plastic hammer to separate the parts. Do not pry the carrier apart.
5. Remove the bearing assemblies **(11)** from the upper and lower halves. Note that the upper half of the bearing carrier has a dowel on each end which mates with a slot **(12)** in the bearing flange.

6. On later cartridges equipped with screw type seals **(6)**, remove the carbon from the grooves in the carrier halves and from the ends of the carrier halves. On earlier cartridges equipped with labyrinth type seals **(13)**, clean the carbon from the seals and the mating surfaces located on the shaft.

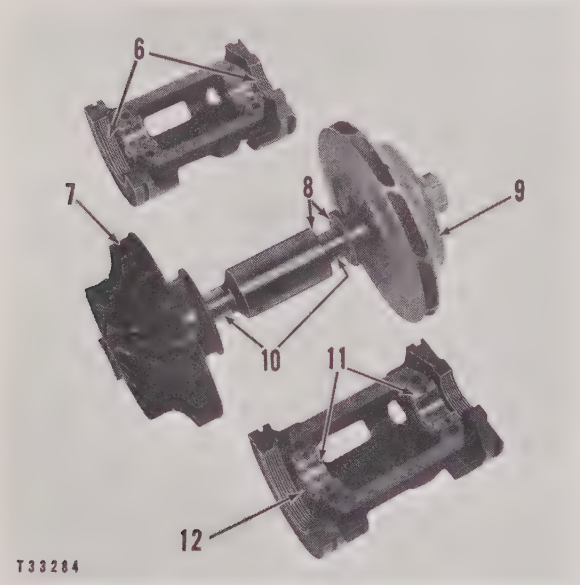

TURBOCHARGER CARTRIDGE DISASSEMBLED
6–Screw type seals. 7–Turbine wheel. 8–Thrust surfaces. 9–Impeller. 10–Bearing journals. 11–Bearings. 12–Slot.

7. Thoroughly clean all parts except the impeller **(9)** and turbine wheel **(7)** in a noninflammable solvent. Clean and inspect the impeller and turbine as recommended in the covering topic.

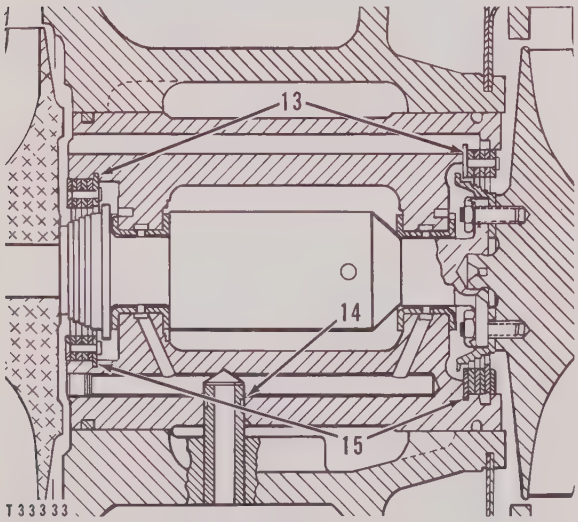

CARTRIDGE CROSS SECTION
13–Labyrinth seals. 14–O-ring seal. 15–Labyrinth seal grooves.

8. Measure the shaft journal diameters at **(10)** and inspect the journals for roughness. If the shaft diameters are not within .7995″ - .8000″, the cartridge assembly must be replaced.
9. Examine thrust surfaces **(8)** on the shaft. If they are damaged, the cartridge assembly must be replaced.
10. Wash all new parts thoroughly and blow out oil and air passages in the carrier. Install new bearings in the carrier, making sure the slots in the bearing flanges line up with the dowels in the upper bearing carrier.
11. Lubricate the bearings and journals with clean oil, and assemble the rotating assembly and the two carrier halves.

CAUTION

On cartridges equipped with labyrinth seals, carefully position the seals over the mating surfaces on the shaft, and align the seal flanges so they slide easily into the grooves **(15)** in the carrier halves. Otherwise, the mating surfaces will be damaged when the carrier halves are bolted together, necessitating replacement of the cartridge assembly.

12. While supporting the cartridge by the carrier only, drive the dowels back into position. Install the bolts which secure the carrier halves. Torque the nuts **(2)** alternately and evenly from 95 to 105 lb. in (8 lb. ft.). Check the rotating assembly to see that it turns freely.
13. The end clearance should be .004″ - .008″, measured as shown in the covering topics. If, after installing new bearings, the end clearance is .012″, the cartridge assembly must be replaced.
14. A new O-ring seal **(3)** and packing **(1)** should be installed at the time of reassembly. Reseal the carrier halves using the 6H4160 Sealing Tool Assembly to impress the letters DLR on the seal.
15. Install a new O-ring **(14)** on the oil inlet tube in the lower half of the center housing. The O-ring should be covered with liquid soap before installing the cartridge assembly in the lower half of the center housing. Be sure the oil tube slips into the oil hole in the carrier.

Cleaning and Inspection

Wash all parts (except the cartridge assembly) with cleaning solvent and dry thoroughly.

Use a wire brush to clean the carbon and deposits from the turbine housing, the nozzle shroud and the nozzle.

CAUTION

The turbine wheel on the cartridge assembly should never be cleaned of carbon or deposits. If a build-up of carbon or deposits is so excessive that portions of the build-up are breaking off, the cartridge assembly should be replaced.

The impeller on the cartridge assembly should not be cleaned unless the build-up of dirt or deposits is excessive. The impeller will normally remain in balance if deposits are not removed.

CAUTION

When cleaning the impeller, do not wash the complete cartridge or turbine wheel with cleaning solvent. Do not touch or disturb any build-up of carbon or deposits on the turbine wheel, as this will disturb the dynamic balance of the rotating parts.

If the tips of the exducer blades are very slightly bent, they may be straightened, using a cloth and pliers. Badly bent turbine wheel blades necessitate the use of a new cartridge assembly since such blades could provide a source of failure.

If cleaning of the impeller is required, use a small bristle brush, or, if found necessary, a piece of soft wood to loosen the heavy deposits. Then use a clean, lint-free cloth with cleaning solvent in order to thoroughly remove **all** deposits from the impeller passages. Laundry soap and warm water may also be used. **Never** use a stiff brush. It is important that the impeller be **thoroughly** cleaned, since the bearings will be damaged if the impeller is not absolutely clean.

Inspect the cartridge assembly for binding, damage, or evidence of rubbing on adjacent parts. Replace the complete assembly if any of these symptoms are present.

ASSEMBLING TURBOCHARGER

Before assembling, be certain that all parts are thoroughly clean. See the topic, CLEANING AND INSPECTION, for the recommended method of cleaning the turbocharger. Extreme care should be taken to keep out dirt and foreign material.

Cartridge Assembly Installation

1. Install a new O-ring seal **(2)** in the groove at the compressor end of the cartridge assembly **(3)**. Lubricate the ring seal with a light coat of grease.
2. Install a new carrier packing **(5)** in the groove at the turbine wheel end of the cartridge assembly.
3. Install a new O-ring seal **(4)** on the oil inlet tube **(6)** and lubricate the O-ring with a light coat of grease.
4. Install the cartridge assembly into the lower half **(7)** of the main housing so that the hole in the cartridge assembly slides over the oil inlet tube. Be certain the O-ring seal and the packing do not catch on the parting surface of the main housing when installing the cartridge assembly.

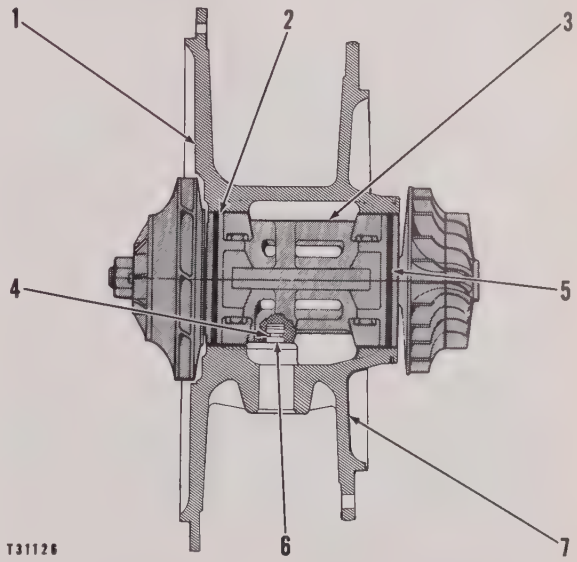

INSTALLING THE CARTRIDGE ASSEMBLY
1–Upper half of main housing. 2–O-ring seal. 3–Cartridge assembly. 4–O-ring seal. 5–Packing. 6–Oil inlet tube. 7–Lower half of main housing.

5. Apply a thin coating of permatex No. 2 **(A)** 1/2" wide, parallel to the bore, 1/8" from the bore, continued on out to the O.D. of the flanges, on both sides of one of the halves of the main hous-

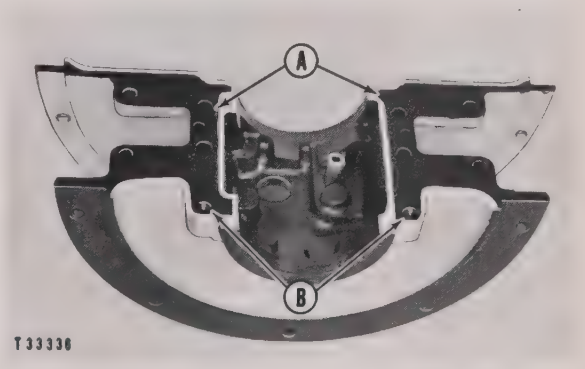

LOCATION OF PERMATEX
A–Permatex. B–Location of stainless steel bolts.

ing. No gasket is to be used here. Care should be exercised so that permatex will not be squeezed into the bore of the housing when the two halves are assembled.

6. Install the upper half of the main housing and the holddown bolts and nuts. Tighten the nuts to 25-30 lb. ft. except the two at location **(B)**, next to the turbine, which should be torqued to 16-20 lb. ft.

NOTE

The bolts which secure the main housing assembly are made of high-strength material. Only the bolts which are previously used in the unit, or genuine Caterpillar replacement bolts should be used to secure the main housing assembly.

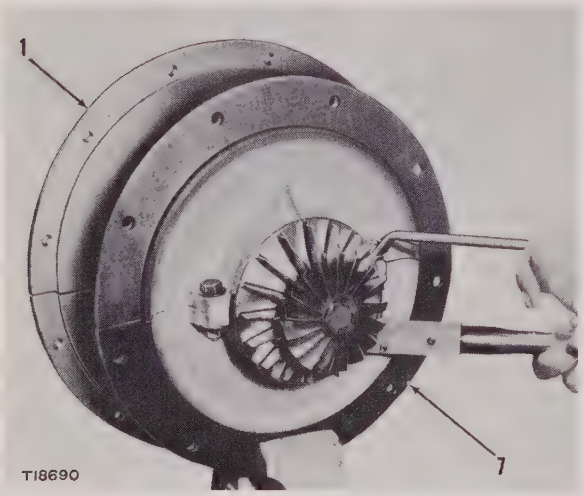

INSTALLING THE UPPER HALF OF MAIN HOUSING
1–Upper half of main housing. 7–Lower half of main housing.

Nozzle and Turbine Housing Assembly

1. Place the nozzle **(3)** into the turbine housing so the pin (not shown) in the nozzle engages into the locating hole **(2)**.
2. Install the nozzle shroud **(5)** into the turbine housing.
3. Install the nozzle retaining bolts **(4)** so the bevel sides of the retaining bolts rest against the nozzle shroud.
4. Install a new gasket on each bolt. (The gaskets are shown in the line drawing in the topic, INTRODUCTION).
5. Tighten each nut to approximately 40 lb. in. torque. Tap each bolt lightly with a plastic hammer as shown in the illustration in order to properly seat it. Then retighten each nut to 45 lb. in.

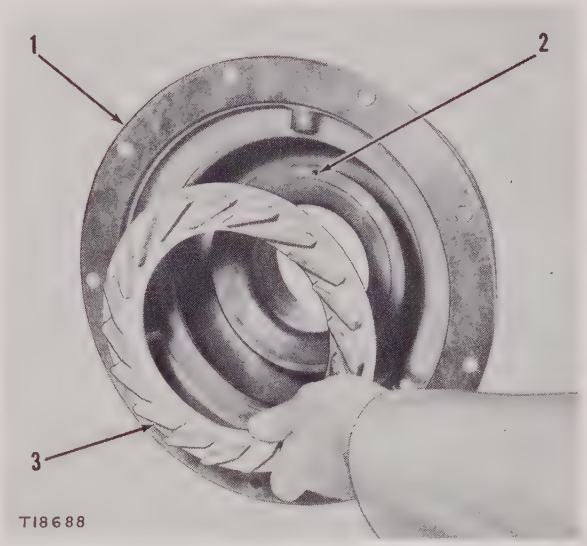

INSTALLING NOZZLE
1–Turbine housing. 2–Locating hole. 3–Nozzle.

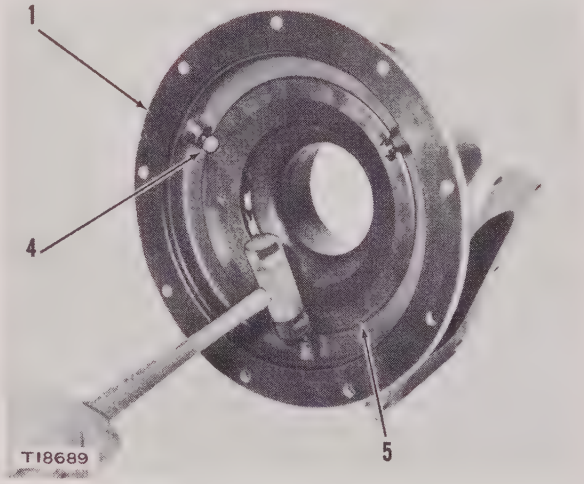

SEATING RETAINING BOLTS
1–Turbine housing. 4–Nozzle retaining bolt. 5–Nozzle shroud.

Turbine Housing Installation with Original Cartridge

The installation of the turbine housing **(4)** onto the main housing assembly is covered in this topic. The installation of the correct number of shims **(3)** required to provide the correct clearance between the turbine wheel and the turbine housing can be determined as follows:

a. On installations where the original cartridge assembly is reinstalled, always use the same shims which were removed at the time of disassembly. The use of the same parts and shims will provide the correct clearance **(A)** to **(B)** between the turbine wheel **(6)** and the turbine housing **(4)**.

b. On installations where a replacement cartridge assembly (or other parts) are installed, it is necessary to measure the clearances in order to determine the number of shims required. See the topic, TURBINE HOUSING INSTALLATION WITH REPLACEMENT CARTRIDGE.

The turbine housing can be installed in the following manner:

Install the heat shields **(1)** and **(5)** onto the main housing assembly **(7)**.

Place the required number of shims **(3)** and the turbine housing **(4)** onto the main housing assembly. Position the turbine housing so the match marks on the turbine housing flange and the main housing flange are aligned.

Install the lifting bracket **(2)** and all the retaining bolts and nuts and tighten to 25-30 lb. ft. torque.

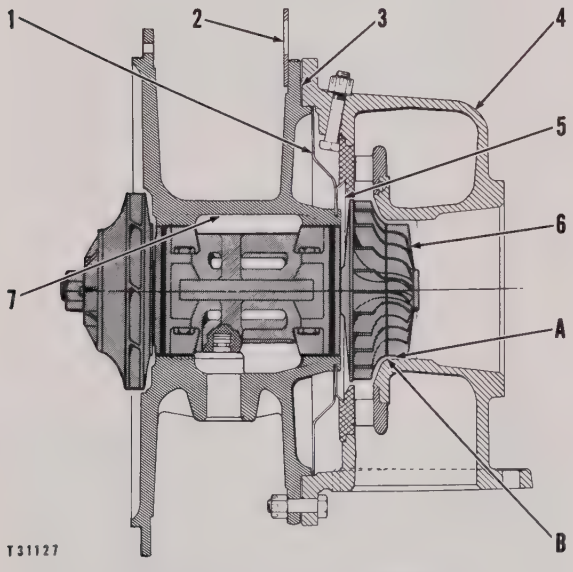

INSTALLING TURBINE HOUSING
1–Heat shield. 2–Lifting bracket. 3–Shims. 4–Turbine housing. 5–Heat shield. 6–Turbine wheel. 7–Main housing assembly. A–Face of turbine wheel. B–Face of turbine housing.

Turbine Housing Installation with Replacement Cartridge and/or Main Housing Assembly

Whenever a new nozzle, cartridge, turbine housing and/or main housing is used, the turbine housing should be reshimmed if necessary.

The clearance between the turbine wheel face **(A)** and the turbine housing face **(B)** is .019″ minimum clearance and .029″ permissible clearance.

NOTE

During operation the clearance between the turbine wheel face **(A)** and the turbine housing face **(B)** tends to decrease, due to heat expansion. Since the deflection of the turbine housing face cannot be checked while running, this deflection is provided for in the installation of shims at the time of assembly.

The procedure for measuring and calculating the required shim thickness is as follows:

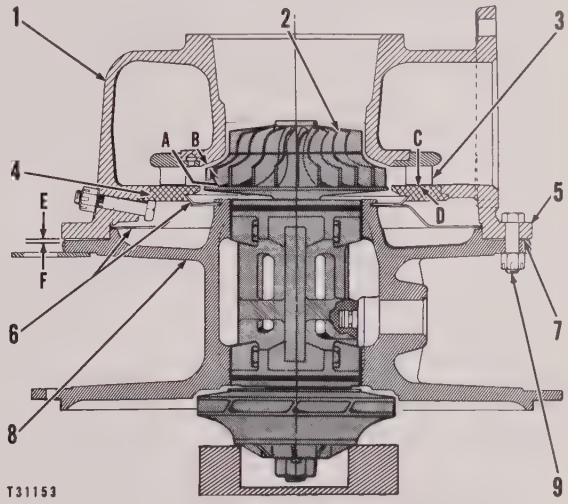

MEASURING FOR SHIM ADJUSTMENT
1–Turbine housing. 2–Turbine wheel. 3–Nozzle vane. 4–Nozzle shroud. 5–Turbine housing flange. 6–Heat shields. 7–Shims. 8–Flange of main housing assembly. 9–Turbine housing retaining bolt and nut. A–Face of turbine wheel. B–Face of turbine housing. C–Face of nozzle vanes. D–Face of nozzle shroud. E–Face of turbine housing flange. F–Face of main housing flange.

1. Measure with a thickness gauge and record the average clearance, if any, between the nozzle

CHECKING MEASUREMENT 1
3–Nozzle vane. 4–Nozzle shroud.

vanes **(3)** and the nozzle shroud **(4)**. (This is the distance **(C)** to **(D)** and is referred to as measurement 1.)

2. Support the assembly on the compressor end of the rotating assembly on a suitable block as shown in the illustration.

3. Carefully place the turbine housing **(1)** in position on the assembly. This will permit the faces **(A)** and **(B)** to touch and therefore be a metal-to-metal contact. (The heat shields **(6)**, the shims **(7)** and the retaining bolts **(9)** must not be installed at this time.)

CAUTION

Do not drop the turbine housing onto the turbine wheel **(2)** as it will damage the cartridge assembly internally.

4. Measure with a thickness gauge, and record the average space between the main housing flange **(8)** and the turbine housing flange **(5)**. (This is the distance **(E)** to **(F)** and is referred to as measurement 2). This is the actual gap between these mating flanges without any clearances between the turbine housing face **(B)** and the turbine wheel face **(A)**.

NOTE

With everything hot, the final A-B clearance should be .019" to .029".

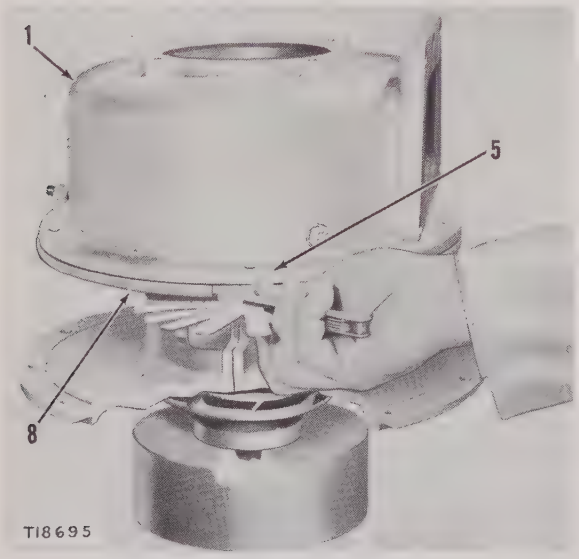

CHECKING MEASUREMENT 2
1–Turbine housing. 5–Flange of turbine housing. 8–Flange of main housing assembly.

5. The correct number of shims required can be determined as follows: Add measurement 1 and measurement 2. Then add .019" to .029", which is the clearance.

Sample I

Turbine Housing Clears Main Housing — Turbine Housing Resting on Turbine

Measurement 1 —		
Nozzle vane to nozzle shroud	.020"	.020"
Measurement 2 —		
Turbine housing flange to main housing	.016"	.016"
Clearance desired, housing to turbine (.019" to .029")	.019"	.029"
	.055"	.065"

From the above calculations, shims totaling about .060" would be used.

Sample II

Turbine Housing Does Not Clear Main Housing When First Checking Measurement 2

Measurement 1 —		
Nozzle vane to nozzle shroud	.020"	.020"
Measurement 2 —		
Turbine housing to main with **.010" shim between turbine housing and turbine**	.006"	.006"
Clearance desired, housing to turbine (.019" to .029")	.019"	.029"
	.045"	.055"
Less shim used between turbine housing and turbine for checking Measurement 2	.010"	.010"
	.035"	.045"

From the above sample calculations, shims totaling .040" would be used.

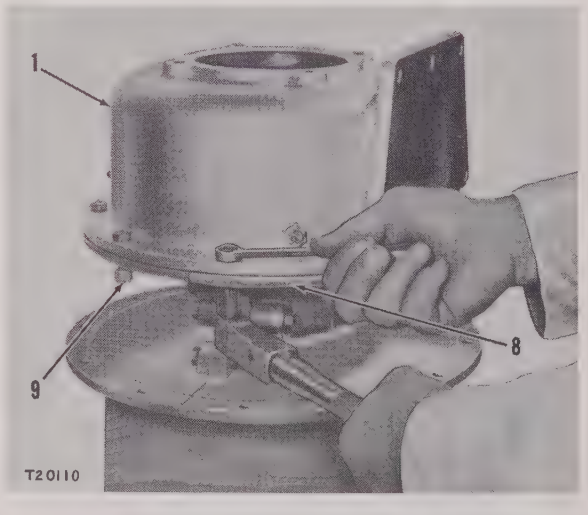

INSTALLING THE TURBINE HOUSING ASSEMBLY
1–Turbine housing. 8–Flange of main housing assembly. 9–Turbine housing retaining bolt and nut.

6. Lift off the turbine housing and then install the heat shields **(6)**.
7. Install the calculated number of shims **(7)** and install the turbine housing. Align the match marks on the housing flanges.
8. Install the retaining bolts and nuts **(9)** and tighten to 25-30 lb. ft. torque. Rotate the shaft by hand while tightening the nuts to be sure the rotating assembly does not bind.

Compressor Housing Installation (Later)

1. Permatex both sides of a new gasket and install the gasket and the compressor housing **(1)** on the main housing assembly **(2)**.

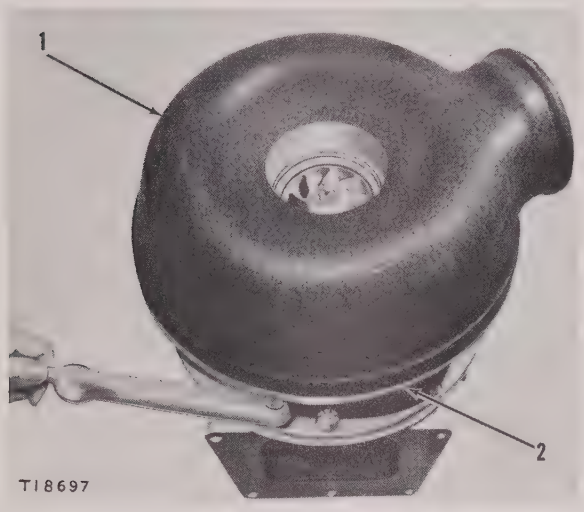

INSTALLING COMPRESSOR HOUSING
1–Compressor housing. 2–Main housing assembly.

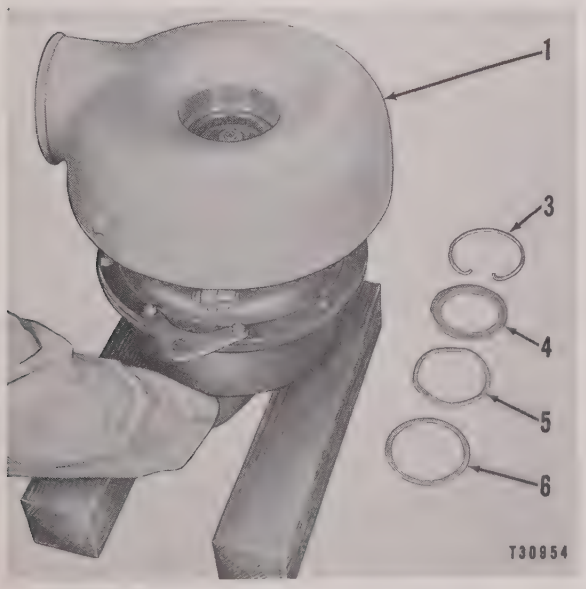

CHECKING IMPELLER CLEARANCE
1–Compressor housing. 3–Snap ring. 4–Guard ring. 4–Wave washer. 6–Shim.

2. Install the lockwashers and nuts and tighten to 13-17 lb. ft. torque.
3. Place the turbocharger on two wood blocks as shown, with the compressor housing **(1)** to the top.
4. Install the thick shim **(8)** and the seal **(7)**.

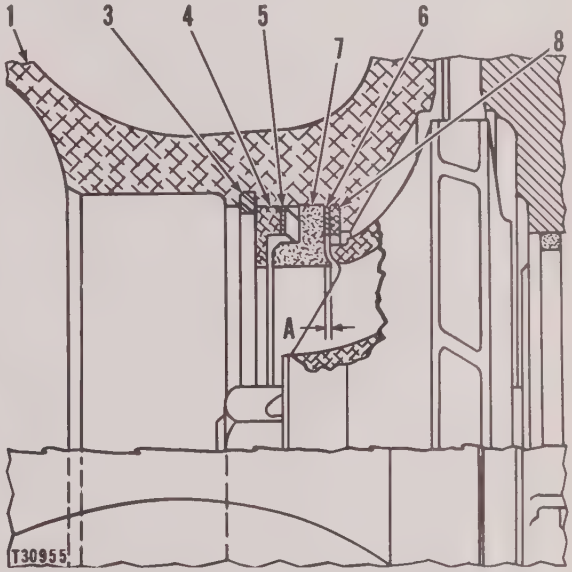

IMPELLER SEAL CROSS-SECTION (LATER TYPE)
1–Compressor housing. 3–Snap ring. 4–Guard ring. 5–Wave washer. 6–Shim. 7–Seal. 8–Shim. A–Clearance of .000" - .010" between seal (7) and face of impeller.

5. Slowly rotate the cartridge assembly from the underneath, while exerting pressure on it up-

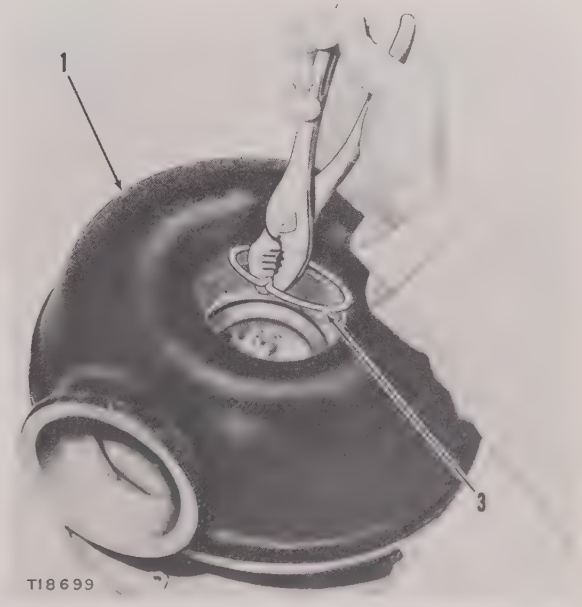

INSTALLING SNAP RING
1–Compressor housing. 3–Snap ring.

ward against the turbine wheel. If the face of the impeller drags on the seal **(7)**, remove the seal and install the thin shims **(6)**, one at a time, until the impeller rotates free of any drag against the seal. This will result in the proper clearance **(A)** of .000″ - .010″.

6. Install the wave washer **(5)**, guard ring **(4)** and snap ring **(3)**.

Compressor Housing Installation (Earlier)

The compressor housing is installed on earlier units the same as on later units, except those on which the later type impeller seal has been installed. No adjustment with shims is made when installing the earlier type impeller seals.

1. Permatex both sides of the gasket and install the gasket and the compressor housing **(1)** on the main housing assembly **(2)**.
2. Install the lockwashers and nuts and tighten to 13-17 lb. ft. torque.
3. Carefully install, alternately, the four glands **(6)** and the four spacers **(4)**.
4. Install the wave washer **(7)** and the guard ring **(5)**. Then install the snap ring **(3)** into the groove in the compressor housing.

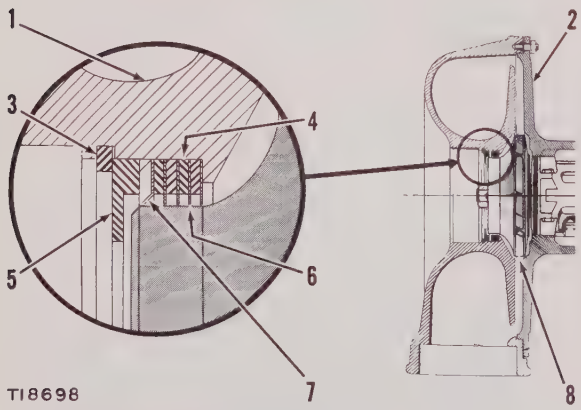

INSTALLING IMPELLER SEAL (EARLIER TYPE)
1–Compressor housing. 2–Main housing assembly. 3–Snap ring. 4–Spacer. 5–Guard ring. 6–Gland. 7–Wave washer. 8–Impeller.

5. Turn the impeller **(8)** by hand to be certain there is no binding or rubbing within the turbocharger. A slight rubbing of the impeller seal glands is permissible until the unit is thoroughly run-in.

Turbocharger

INTRODUCTION

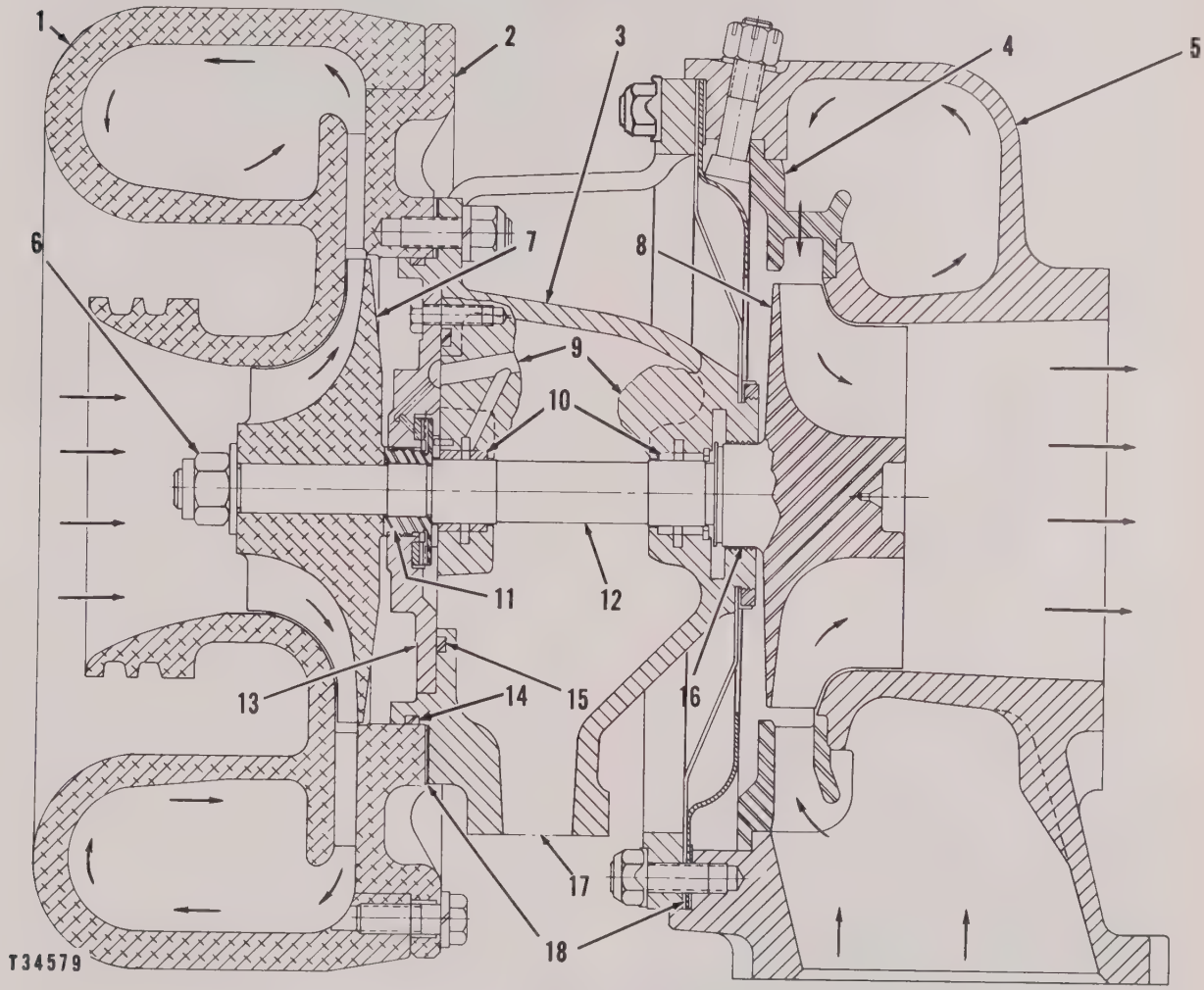

TURBOCHARGER

1–Compressor housing. 2–Diffuser plate. 3–Main housing. 4–Nozzle. 5–Turbine housing. 6–Impeller nut. 7–Impeller. 8–Turbine wheel. 9–Oil passages. 10–Bearings. 11–Thrust ring with piston ring seal. 12–Shaft. 13–Thrust plate. 14–O-ring seal. 15–O-ring seal. 16–Screw-type oil seal. 17–Oil drain hole. 18–Shims.

The turbocharger is designed to increase the diesel engine power output. The turbocharger absorbs energy from the diesel exhaust gases, and uses this energy to drive the turbocharger impeller **(7)** for supercharging the diesel engine.

The turbocharger is basically comprised of a rotating assembly, one piece main housing **(3)**, turbine housing **(5)**, and compressor housing **(1)**. The rotating assembly consists namely of a shaft **(12)**, impeller **(7)** and turbine wheel **(8)**. The compressor housing and turbine housing are mounted to the main housing.

The turbine wheel is located in the turbine housing and is permanently secured to one end of the shaft. The impeller is secured to the other end of the shaft by a nut **(6)** to form an integral rotating assembly. To assure reliability and freedom from vibration, all parts of the rotating assembly have been carefully dynamically balanced.

The rotating assembly is supported by two full floating pressure-lubricated bearings **(10)** located in the main housing. Filtered engine oil is supplied to the bearings through passages **(9)** in the housing in sufficient quantity to lubricate the bearings and to aid in the removal of excessive heat. Oil returns from the turbocharger to the crankcase through an external tube at **(17)**. The main housing contains the lubricating oil inlet and outlet connections. Thrust

loads are absorbed by a thrust ring **(11)** rotating between two stationary aluminum thrust washers. A larger thrust plate **(13)** retains the thrust ring and washers in place.

Screw threads **(16)** cut into the main housing at the turbine end of the shaft prevent oil from escaping into the turbine housing. On the impeller end of the shaft, a piston ring and screw threads cut in a portion of the thrust ring seal oil from the compressor housing. An O-ring seal **(15)** is also used between the thrust plate and main housing.

The compressor housing encloses the impeller and is bolted to diffuser **(2)**, which is bolted to the main housing **(3)**. Curved vanes on the diffuser convert high velocity air with low static pressure to low velocity air with high static pressure. The main portion of the compressor housing then directs the compressed air into the inlet manifold. O-ring seal **(14)** prevents air leakage.

Shims **(18)** are located between the main housing and turbine housing, and between the main housing and diffuser plate to provide a means of adjusting the clearance between the housings and impeller and turbine wheel.

The turbine housing encloses the turbine wheel and acts as a collecting chamber for the exhaust gases from the diesel engine. The turbine housing directs the gases through a nozzle and into contact with the turbine wheel. The energy of the exhaust gases acts as a driving force to rotate the turbine wheel and the impeller. After passing through the turbine wheel, the exhaust gases exit from the turbine housing and out the exhaust stack.

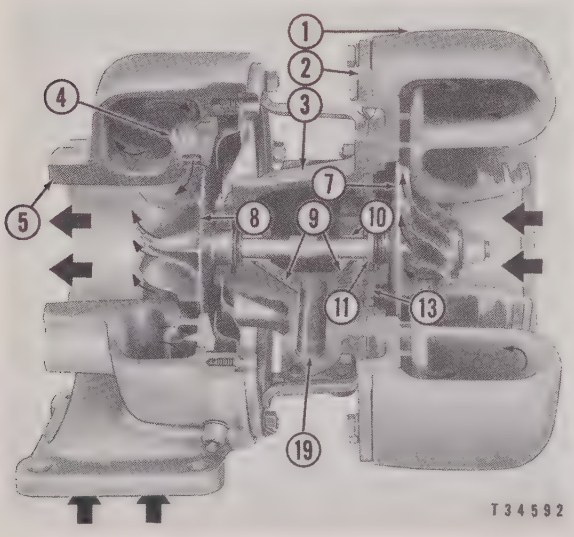

CUTAWAY MODEL VIEW

1–Compressor housing. 2–Diffuser plate. 3–Main housing. 4–Turbine nozzle. 5–Turbine housing. 7–Impeller. 8–Turbine wheel. 9–Oil passages. 10–Bearing. 11–Thrust ring. 13–Thrust plate. 19–Oil inlet hole.

CAUTION

When servicing the turbocharger, exercise extreme care to prevent any damage to the blades on the turbine wheel and impeller.

ALTITUDE OPERATION

The maximum turbocharger speed is determined by the rack setting, the high idle speed setting, the pressure ratio control setting, on engines so equipped, and the altitude at which the engine is operated. The rack setting has been set to permit the engine to be operated at the altitude given on the warning plate on the instrument panel or valve cover. The high idle speed setting is not the same for all altitudes. If the high idle speed or the rack setting is greater than specified for the altitude at which the engine is operated, serious damage to engine or turbocharger parts may result.

The maximum altitude at which the engine can be operated is specified on the altitude warning plate located on the valve cover or instrument panel. The governor housing and turbocharger are sealed to prevent serious engine damage or personal injury due to operation of the engine with incorrect settings or turbocharger nozzle. Changes to the turbocharger, rack setting, or high idle speed should be made only by a Caterpillar dealer serviceman.

The engine can be operated at a lower altitude than specified on the warning plate without danger of engine damage, but with slightly less than maximum performance. When operated at a higher altitude, the rack setting and high idle speed setting must be changed only by a Caterpillar dealer serviceman. After making any changes, the new altitude limit should be stamped on the altitude warning plate.

Also, the new high idle, full load speed, and rack setting should be stamped on the governor warning plate. Reseal the governor housing for continued protection.

SEALING OF THE TURBOCHARGER

The turbocharger is sealed at the factory as shown at **(1)**. Factory installed seals are identified by the letter CT CO. Dealer's sealing tool, 6H4160 Sealing Tool Assembly, will impress the letters DLR on the seals.

The seal **(A)** with which the serviceman reseals these parts differs from the original factory seal **(B)** as illustrated.

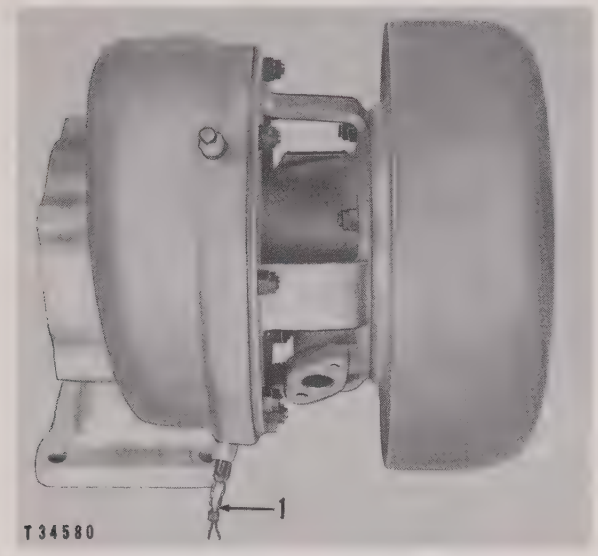

TURBOCHARGER FACTORY SEAL
1–Seal.

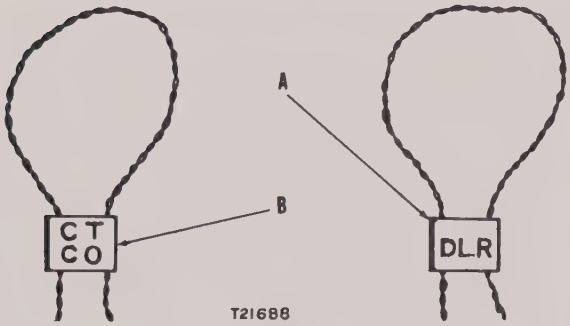

SEALS
A–Dealer replacement seal. B–Original factory seal.

CHECKING TURBOCHARGER BEARING CLEARANCE

A quick check of bearing condition can be made without disassembling the turbocharger. This can be done by inspecting the compressor impeller, turbine wheel and housings. If there is no indication of either the impeller or turbine rubbing the housing, the bearing clearances are generally satisfactory.

A more reliable check of bearing condition can be made only when the turbocharger is disassembled and the bearings, shaft journal and housing bore diameter can actually be measured. See the topic, SPECIFICATIONS, for these diameters.

While the turbocharger is disassembled, carefully check the back surfaces of the compressor impeller and turbine wheel for signs of contact with the housing. Contact in these areas would indicate worn thrust ring or washers.

CHECKING TURBOCHARGER SHAFT END CLEARANCE

See the topic, SPECIFICATIONS, for normal and permissible shaft end clearance (axial movement). End clearance is checked with a dial indicator, either on the engine or off the engine. If the permissible clearance is exceeded, the turbocharger should be reconditioned.

DISASSEMBLING TURBOCHARGER

Before disassembling the turbocharger, mark the positions of the compressor housing and turbine housing relative to the main housing. This assures correct positioning of the compressor air outlet and oil connections during reassembly.

Compressor Housing Removal

1. Remove the nuts holding the diffuser plate **(2)** to main housing **(5)**.
2. Remove compressor housing **(1)** and the diffuser plate as a unit, being careful not to damage shims **(3)**.
3. Remove the shims and O-ring seal **(4)**. Wire the shims together.

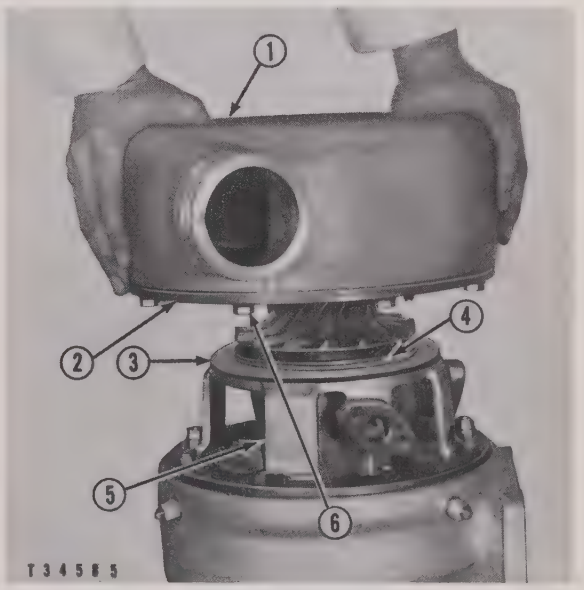

REMOVING COMPRESSOR HOUSING AND DIFFUSER PLATE
1–Compressor housing. 2–Diffuser plate. 3–Shims. 4–O-ring seal. 5–Main housing. 6–Bolt.

4. Separate the diffuser from the compressor housing by removing bolts **(6)**.

Turbine Housing and Nozzle Removal

Break the seal on the one bolt, bend the locks,

and remove the nuts which secure the turbine housing **(1)** to the main housing.

Remove the turbine housing and shims **(5)**. Wire the shims together.

CAUTION

In some cases after a turbocharger has been operating for some time, it may be necessary to loosen the turbine housing by carefully striking the housing flange with a soft hammer.

Remove bolts **(3)** and nozzle **(2)**. The small ear on the nozzle mates in groove **(4)** to prevent the nozzle from rotating.

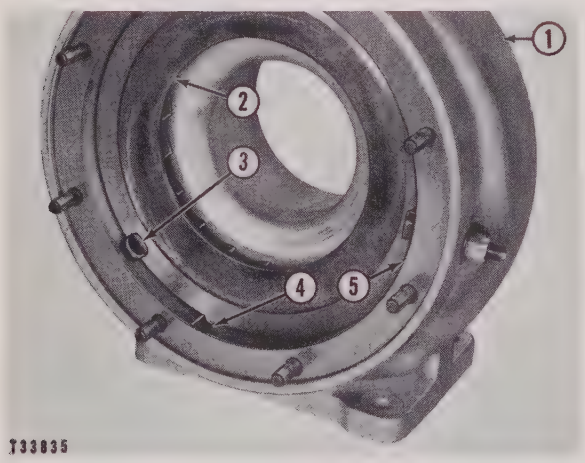

PREPARING TO REMOVE NOZZLE
1–Turbine housing. 2–Nozzle. 3–Nozzle bolts. 4–Groove. 5–Shims.

Disassembly and Replacement of Rotating Parts

Before disassembly of the rotating assembly, measure the shaft end clearance as previously described. If the clearance is excessive, and either the turbine wheel or impeller has rubbed against the housings, the bearings and/or thrust washers and thrust ring must be replaced. Bent impeller blades require replacement of the entire rotating assembly. Turbine blades which are noticeably bent also require replacement of the rotating assembly.

Bearing failure can damage the shaft journals and/or thrust ring. Execessive wear or roughness renders the shaft unsuitable for reuse. If the shaft journals measure less than the specified diameter, a new rotating assembly should be installed. Visual inspection and experience is the only way to determine when the roughness of the shaft prohibits reusing the rotating assembly. New bearings will not correct excessive wear on the thrust surfaces of the thrust ring and washers.

Installing new bearings does not preclude the necessity of inspecting and cleaning the rotating parts.

1. Before removing the impeller, make sure the alignment marks on the impeller, washer, nut, and shaft are visible. If not, mark a small dye line since all rotating parts must be rematched during reassembly to maintain the previously established dynamic balance of the unit.

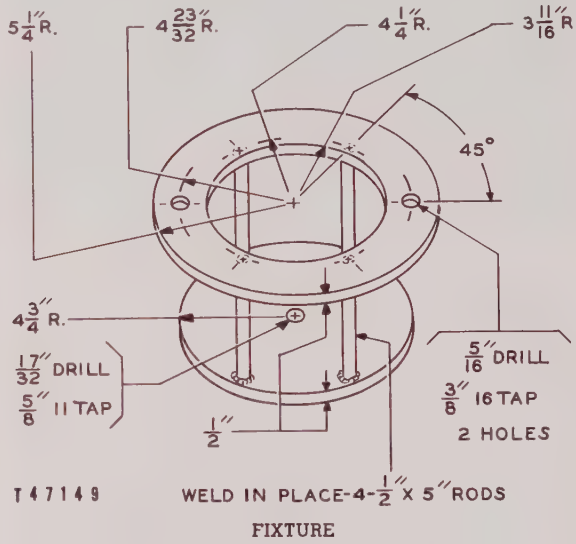

NOTE

The assembly is shown mounted on a fabricated fixture. Details for fixture fabrication are shown in the illustration.

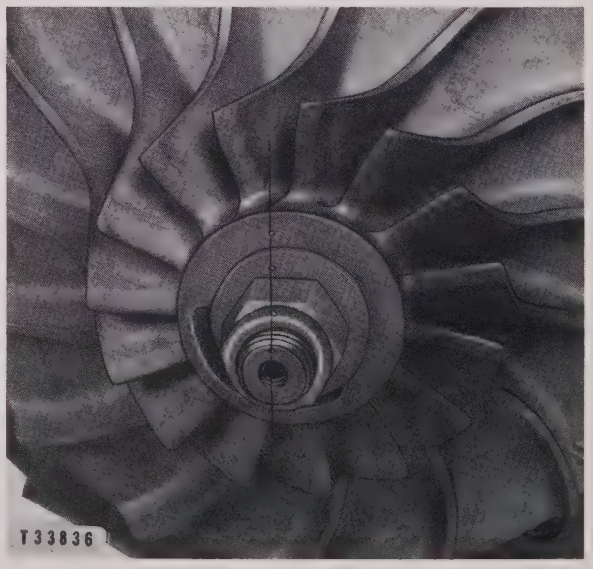

IMPELLER ALIGNMENT MARKS

2. Remove the nut and washer. The rotating assembly may be held stationary by use of a clamp similar to the one shown. A bar can be inserted in the clamp **(1)** to hold the fixture stationary and guide pins **(A)** installed in the fixture to properly align the unit.

NOTE

Details for fabricating the clamp **(1)** are shown in the illustration.

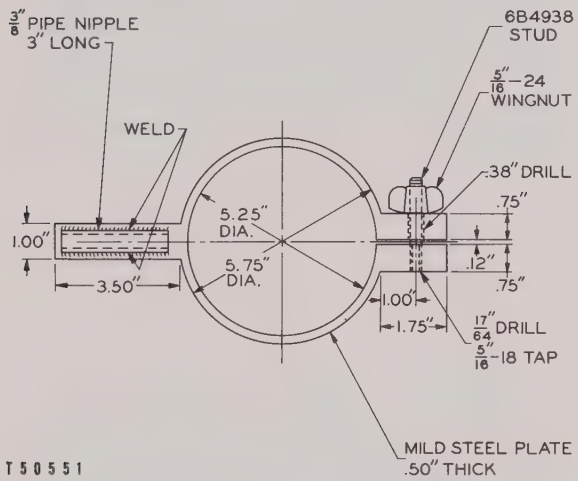

DETAIL FOR FABRICATING CLAMP

CAUTION

Take care to prevent any distortion of the blades. It is also recommended that a double universal joint be used to prevent possible bending of the shaft. Also, be sure the clamp is installed on the turbine wheel.

3. Heat the impeller by immersing it in oil at 375° F. for not longer than 10 minutes. Do not immerse the entire unit.

CAUTION

A longer heating period or higher temperature can affect the heat treat characteristics of the impeller.

4. Using a press and a long bolt or stud, press the shaft and turbine wheel from the impeller hub as shown.

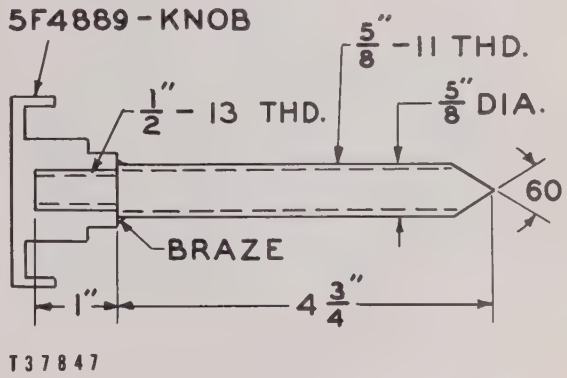

DETAILS FOR FABRICATING SUPPORT SCREW

NOTE

Thread the support screw, shown in the illustration, into the base of the fixture to contain the turbine wheel and shaft when pressed from the impeller. Leave a space between the end of the screw and the turbine wheel equal to or slightly greater than the thickness of the impeller. This will allow an unobstructed pressing action on the shaft and still prevent the turbine wheel from being damaged by striking against the fixture base.

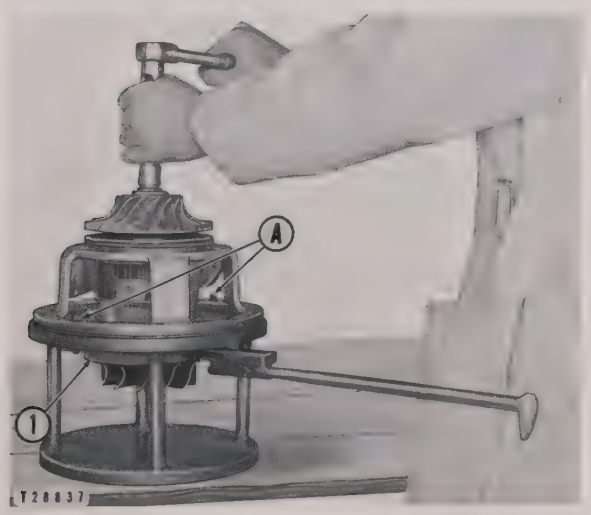

REMOVING IMPELLER NUT
A–Guide pins. 1–Clamp.

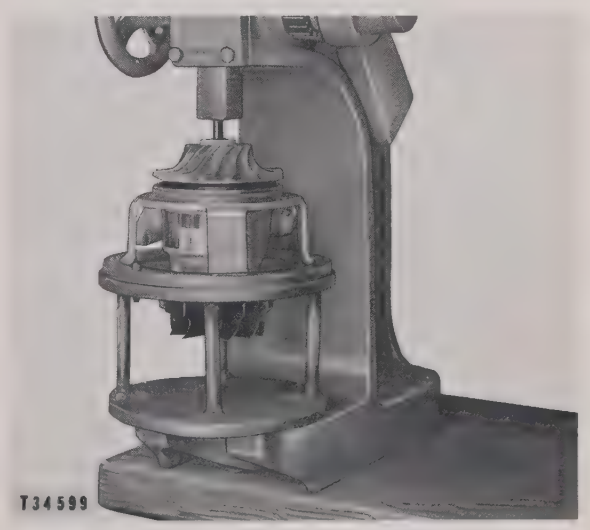

PRESSING SHAFT AND TURBINE WHEEL FROM IMPELLER

CAUTION

When the impeller is properly heated, only a slight press should be required. Do not bolt the unit to the fixture.

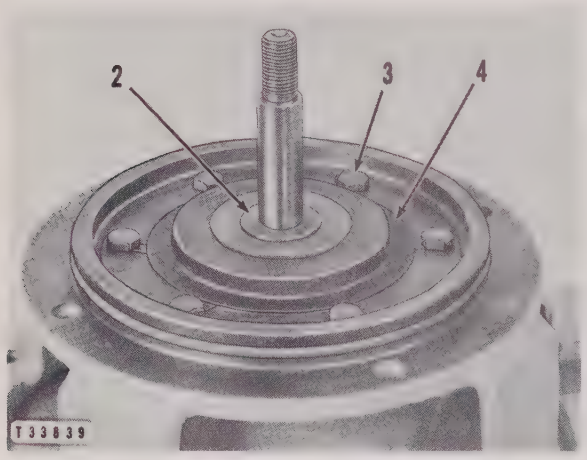

PREPARING TO REMOVE THRUST PLATE
2–Thrust ring. 3–Bolt. 4–Thrust plate.

5. After removing the impeller, but before removing the shaft from the housing or turning the shaft, note the alignment mark on thrust ring **(2)**. The shaft and thrust ring must be aligned during reassembly.

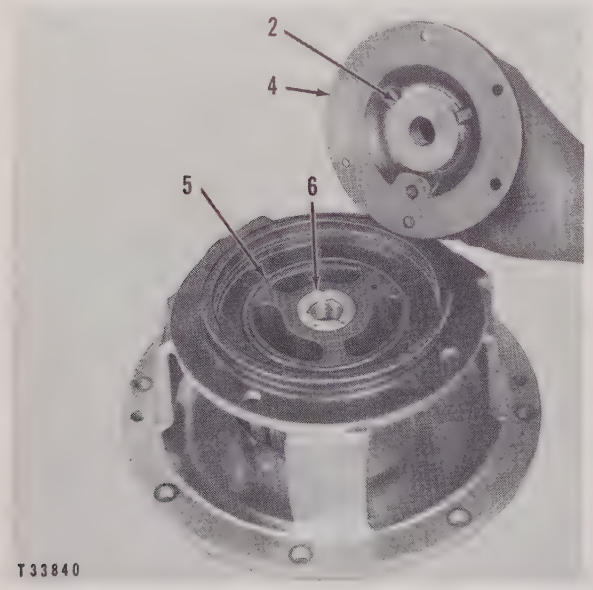

REMOVING RETAINER
2–Thrust ring. 4–Thrust plate. 5–O-ring seal. 6–Thrust washer.

6. Remove the locks and bolts **(3)** which secure thrust plate **(4)** to the main housing and remove the plate.

7. Remove O-ring seal **(5)** and thrust washer **(6)**.

8. Remove thrust ring **(2)** and thrust washer **(7)** from the plate **(4)**. Note that both washers **(6)** and **(7)** are installed with the oil grooves toward thrust ring **(2)**. Using a micrometer, measure the thickness of the two thrust washers and the thrust ring. If the thickness of either washer or the thrust ring is less than specified, these parts should be replaced to correct excessive end clearance. Be sure the radially drilled oil holes **(9)** in the ring flange are thoroughly cleaned.

9. If the bore in the thrust plate is grooved, it too should be replaced. The ring **(8)** gap, using the bore in a new thrust plate as a ring gauge, should not exceed the figure specified.

10. If bearing radial clearance is excessive, replace bearings **(10)** and **(11)**. The bearings are interchangeable and may be installed with either end in the housing.

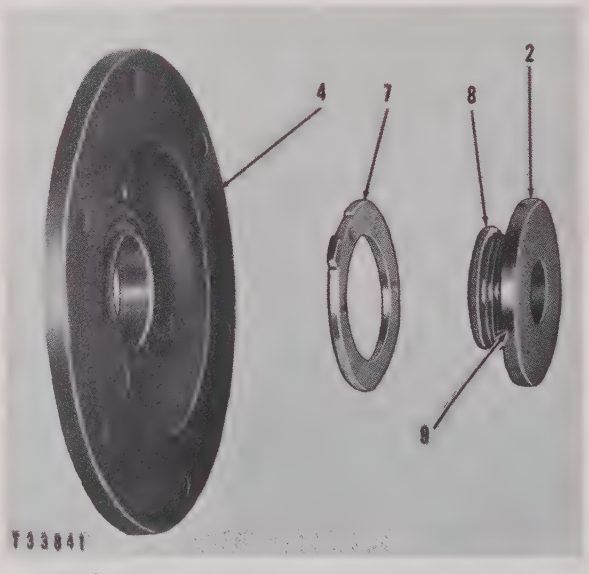

REMOVING THRUST WASHER AND THRUST RING
2–Thrust ring. 4–Thrust plate. 7–Thrust washer. 8–Piston ring seal. 9–Oil hole.

11. To remove bearing **(11)** at the turbine end of the housing, remove snap ring **(12)**.

12. Measure the shaft journal diameters and inspect the journals for roughness. If the journal diameter is less than specified, the rotating assembly must be replaced.

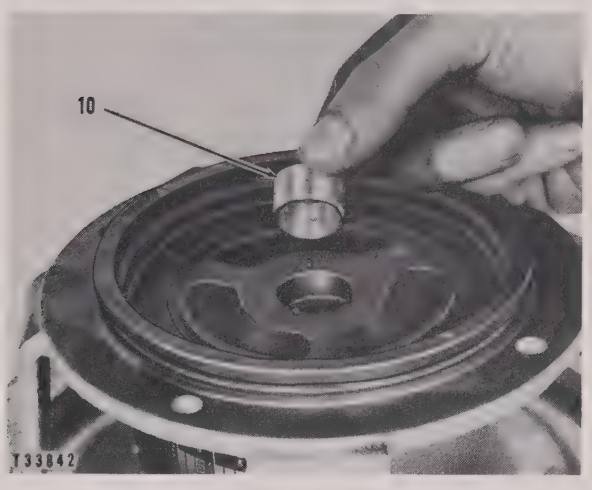

REMOVING BEARING FROM IMPELLER END
10–Bearing.

13. Inspect the housing bore for roughness and measure the bore. If the bore is not within specifications, the housing must be replaced.

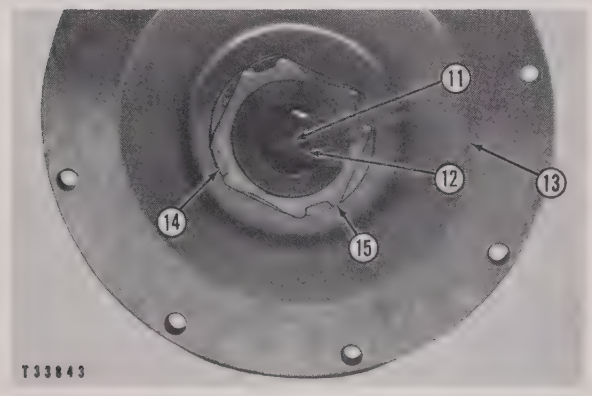

PREPARING TO REMOVE BEARING FROM TURBINE END
11–Bearing. 12–Snap ring. 13–Diaphragm assembly. 14–Lock. 15–Nut.

14. The diaphragm assembly **(13)** is removed from the main housing by bending the lock **(14)**, which is welded to the diaphragm assembly, and removing the nut **(15)**.

CLEANING AND INSPECTION

Inspect all rotating parts for binding, damage, or evidence of rubbing on adjacent parts. Replace any damaged parts if any of these symptoms are present.

Wash all parts with a cleaning solvent and dry thoroughly. Use a piece of wood to clean the carbon and deposits from the turbine housing and the nozzle.

The turbine wheel must be cleaned with a good cleaning solvent in order to dissolve the carbon. The amount of soaking depends on the amount and type of deposits on the wheel. When hard carbon deposits are formed, soaking in a solvent-type cleaner for an hour or more is required. The loosened particles must all be scraped off with a stiff brush or a specially shaped piece of wood and, if necessary, the whole process repeated. If the wheel is covered with soot only, washing with a stiff brush and cleaning solvent and then rinsing with clean water will be sufficient.

CAUTION

The rotating components must be thoroughly cleaned in order to maintain the critical balance of the unit but do not use a wire brush or wheel.

ASSEMBLING TURBOCHARGER

Before assembling, be certain all parts are thoroughly clean. Extreme care must be taken to keep out dirt and foreign material.

Assembling Main Housing and Rotating Parts

1. Lubricate all rotating parts with clean crankcase lubricating oil, as well as the housing bores.
2. Install a new O-ring seal **(3)**. Install the bearings, thrust washer **(4)**, thrust ring **(1)** and thrust plate **(2)**. A larger washer is also installed between the ring and plate. Be sure oil holes **(5)** in the plate and main housing are in line. Tighten the thrust plate bolts to the specified torque. The bearings are a loose fit in the housing which has a bearing bore as specified.

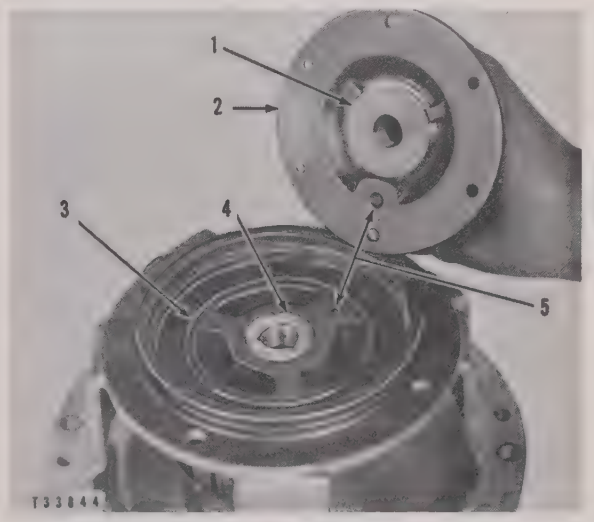

INSTALLING THRUST PLATE AND RELATED PARTS
1–Thrust ring. 2–Thrust plate. 3–O-ring seal. 4–Thrust washer. 5–Oil holes.

3. Position the turbine wheel and shaft in the main housing and support the unit on the fixture with the aid of the fabricated support screw. See the topic, DISASSEMBLING TURBOCHARGER. Align the assembly marks on the shaft and thrust ring.

4. Heat the impeller in oil at 375° F. for 10 minutes.

CAUTION

Additional heating should be avoided since excessive heating can change the heat treat characteristics of the impeller.

5. After 10 minutes of heating, quickly install the impeller on the shaft. Care must be exercised to be certain the assembly mark on the impeller is aligned with the mark on the shaft before it is pushed onto the shaft.

6. Tighten the impeller nut to the torque specified, aligning the assembly mark on the washer as closely as possible with those on the shaft and impeller. After the impeller has cooled to less than 150° F., tighten the nut to the specified torque. When tightening the nut, be certain excessive side loads are not imposed on the shaft by observing the same precautions as when removing the nut. See the topic, DISASSEMBLY AND REPLACEMENT OF ROTATING PARTS.

CAUTION

The alignment mark on the nut may not align perfectly with the impeller mark when retightened to the specified torque. Although this is undesirable, the nut should not be replaced unless it is damaged or has lost its self-locking characteristic.

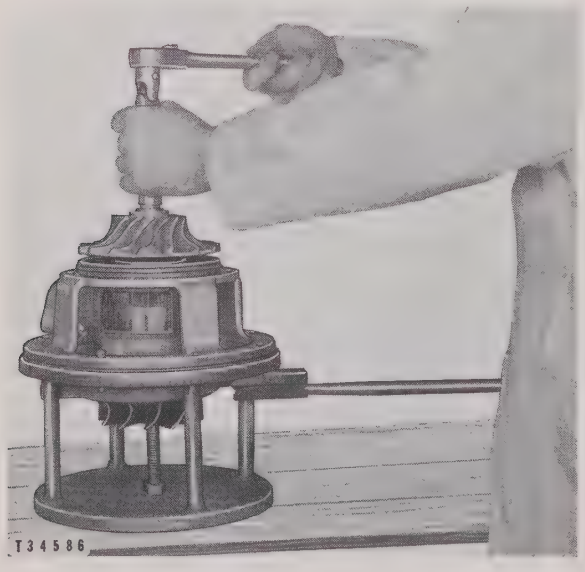

TIGHTENING IMPELLER NUT

Installing Nozzle in Turbine Housing

1. Place nozzle **(3)** in the turbine housing with ear **(2)** in the groove in the housing.

2. Install retaining bolts **(1)** with the beveled sides next to the nozzle.

NOTE

Two sides of the bolt heads are tapered, but at a different distance from the bolt center line. The amount the bolt extends through the housing is controlled by rotating the bolt 180°.

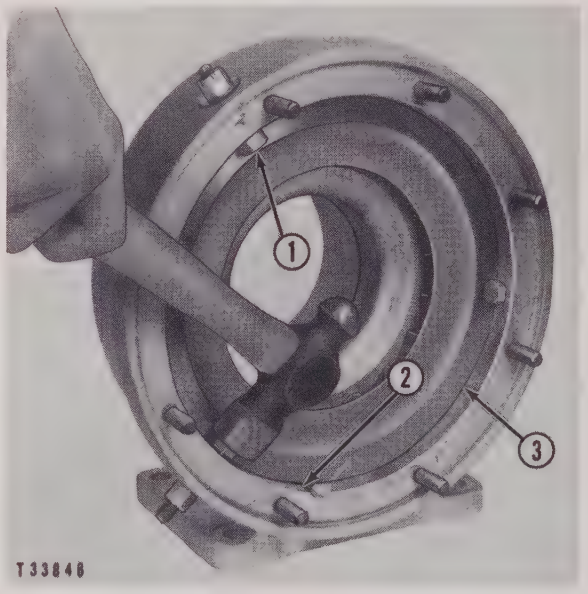

INSTALLING NOZZLE RETAINING BOLTS
1–Bolt. 2–Ear. 3–Nozzle.

3. Using new gaskets under the nuts, tighten each nut to the specified torque. Tap each bolt lightly with a hammer and retighten.

4. Be sure to reseal the one nozzle retaining bolt as described in the covering topic.

Turbine Housing Installation with Original Parts

When the turbine housing is installed to the main housing using all original parts, always install the same amount of shims as removed during disassembly.

Place the original number of shims and the turbine housing onto the main housing. Align the assembly marks on the two housings.

Install the locks and nuts and torque as specified. Rotate the shaft while tightening nuts to be sure there is no binding present.

Turbine Housing Installation with Replacement Parts

Whenever any new parts except seals and the piston ring, are installed, it is necessary to determine the number of shims to add between the main housing flange and the turbine housing in order to obtain the specified clearance between the turbine wheel and turbine housing.

1. With the turbine housing positioned as shown, place a trial amount of shims **(1)**, about .050", in place over studs **(2)**.

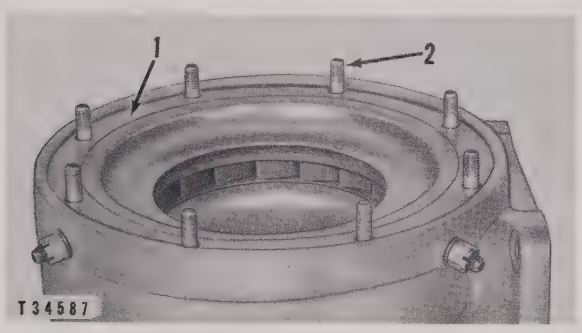

PREPARING TO INSTALL TURBINE HOUSING
1–Shims. 2–Stud.

2. Install the main housing on the turbine housing, spinning the rotating assembly while evenly tightening three or four nuts **(3)** until the turbine wheel just begins to rub or until the nuts are tightened to about 20 lb. ft.

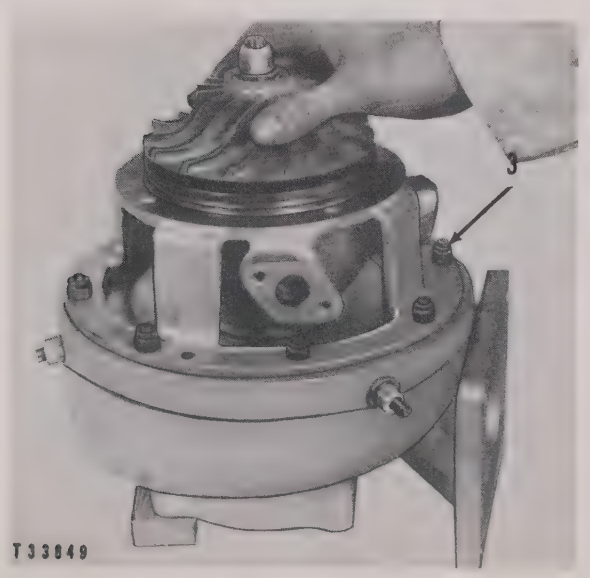

DETERMINING TURBINE CLEARANCE
3–Nut.

NOTE

End clearance must be taken out in the direction of the housing being installed while rotating the shaft. In the position shown, end clearance is taken out toward the turbine housing.

3. If the wheel rubs during this process, remove the main housing and install the shims in steps of .010" until the wheel no longer rubs when the main housing is pulled down. Then add .020" additional shims to provide necessary face clearance.

4. If the turbine wheel does not rub its housing in Step 2, then remove shims in steps of .010" until the turbine wheel does just begin to rub as the nuts are tightened evenly. Then add .030" additional shims to provide the necessary face clearance.

5. Install the main housing to the turbine housing aligning the assembly marks on the housing. Install the locks and nuts.

6. Tighten the nuts to the specified torque. Rotate the shaft while tightening the nuts to be sure the rotating assembly does not bind.

Compressor Housing Installation with Original Parts

When the compressor housing is installed to the turbine housing using all original parts, always install the same number of shims as removed during disassembly.

Place the original number of shims and a new O-ring on the main housing.

Place the compressor housing on the main housing and torque the nuts as specified. Rotate the shaft to check for any binding. Align the assembly marks on the housings.

Compressor Housing Installation with Replacement Parts

Whenever any new parts except seals and the piston ring are installed, it is necessary to determine the number of shims to add between the main housing and compressor housing in order to obtain the specified running clearance between the impeller and the compressor housing.

1. Position the unit on the turbine housing.

2. Install diffuser plate **(2)** on main housing **(3)**, using only two nuts and lockwashers to hold the plate in place. Do not install the O-ring seal or shims at this time.

3. Carefully place compressor housing **(1)** in position over impeller **(4)**. The housing will rest on the impeller.

4. Measure with a thickness gauge, average, and record to the nearest .005" the clearance between the compressor housing and diffuser plate.

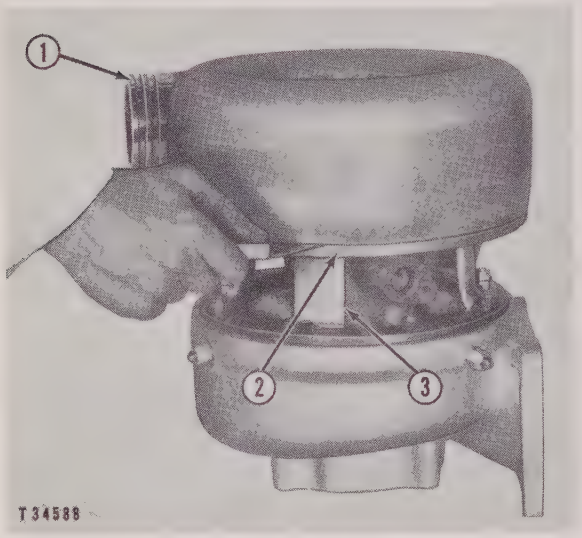

MEASURING MAIN HOUSING TO COMPRESSOR HOUSING CLEARANCE
1–Compressor housing. 2–Diffuser plate. 3–Main housing.

5. Remove the compressor housing and diffuser plate.

6. Add the number of shims obtained in Step 4, install the compressor housing and plate, and draw up evenly the diffuser plate to the main housing and then the compressor housing to the diffuser plate until the impeller just begins to rub its housing.

CAUTION

While tightening the bolts in the compressor housing, the turbine wheel must be pushed up to place all end clearance toward the impeller end. Make sure the impeller blades are not damaged when the compressor housing is tightened.

7. Add shims in steps of .005" until, when the compressor nuts are tightened to about 15 lb. ft., the impeller no longer rubs when pushed up.

8. Add an additional .010" shims and a new O-ring seal on the main housing.

9. Install the diffuser plate and compressor housing making certain the housing is positioned the same as before originally removed.

10. Use thickness gauges to center the compressor housing accurately around the impeller **(4)** while tightening the nuts and bolts to the specified torque. Use Permatex Super 300 in the tapped holes in the compressor housing and between the compressor housing and diffuser plate. Rotate the shaft to be certain there is no binding.

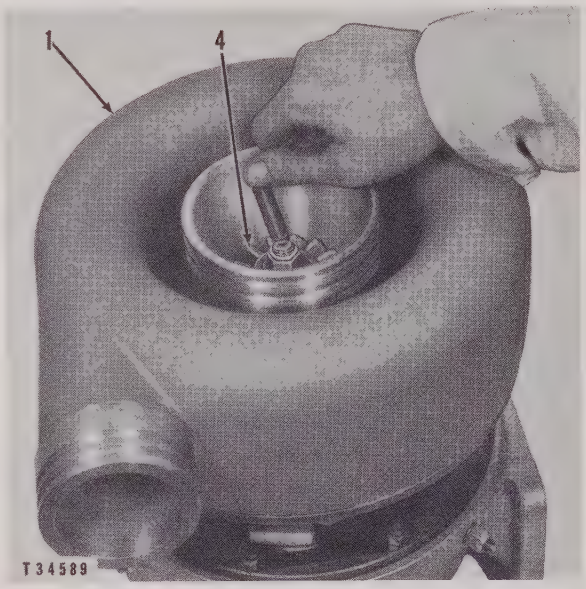

CENTERING COMPRESSOR HOUSING
1–Compressor housing. 4–Impeller.

Cylinder Heads

Two cylinder heads are used on this engine. Water directors direct the flow of coolant toward the valve ports and precombustion chambers.

Rubber seals and ferrules seal the water passages between the cylinder heads and the cylinder block.

REMOVAL

1. Drain the coolant from the engine.

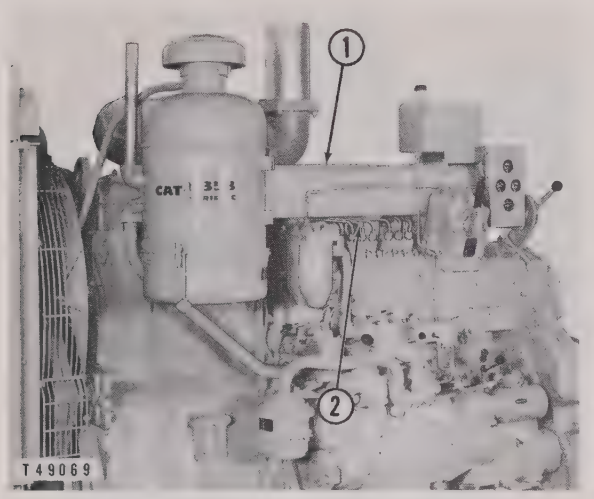

PREPARING TO REMOVE CYLINDER HEADS
(Earlier Engines)
1–Inlet manifold. 2–Fuel injection lines (six).

2. Remove the inlet manifold **(1)** or **(8)**. See the covering topic.

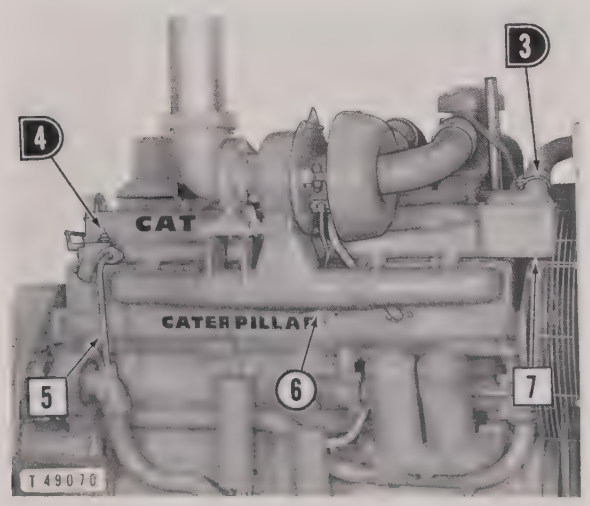

PREPARING TO REMOVE CYLINDER HEADS
(Earlier Engines)

☐ Remove ◗ Disconnect

3–Hose. 4–Temperature indicator heat bulb. 5–By-pass line. 6–Exhaust manifold. 7–Water manifold.

3. Remove the fuel injection lines **(2)** and cover all openings to prevent the entry of dirt into the fuel system.
4. Remove the exhaust manifold **(6)** or **(10)**. See the covering topic.

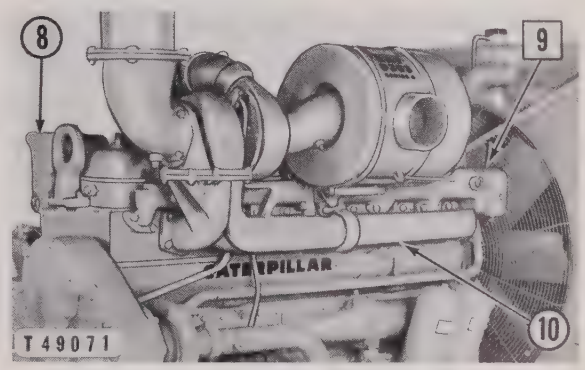

PREPARING TO REMOVE CYLINDER HEADS
(Later Engines)

☐ **Remove**

8–Inlet manifold. 9–Water manifold. 10–Exhaust manifold.

5. Remove the rocker arm assemblies. See the covering topic.
6. Remove the nuts from the head studs.
7. Use a 5F7344 Block with a suitable eyebolt. Attach the lifting device and a suitable hoist to the center rocker arm stud and a 3/8″ bolt of suitable length in the tapped hole and remove the cylinder head as shown.
8. Remove and inspect for damage, the water ferrules and seals **(11)**.

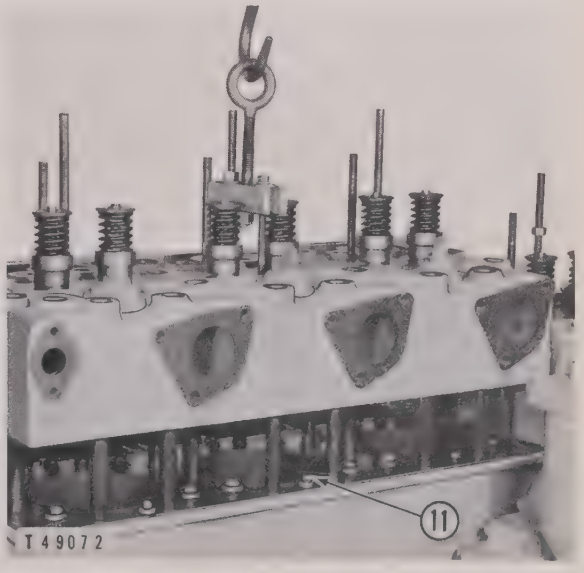

CYLINDER HEAD REMOVAL
11–Water ferrules and seals.

INSTALLATION

New cylinder head gaskets should be installed.

1. Place the gasket on the cylinder block.
2. Install the ferrules and seals.
3. Carefully lower the head on the block. Proper head alignment is assured by dowel pins located in the block.

CAUTION

When installing the head on the cylinder block, see that the ferrules and seals are properly installed and start properly into the recessed holes in the head. Rock the head gently until it seats flat on the head gasket.

4. Install the cylinder head stud nuts. See the topic, SPECIFICATIONS, for the correct tightening sequence and torque value.

NOTE

Check the torque on the stud nuts after engine run-in. If the torque value is lower than that listed under the topic, SPECIFICATIONS, they should be retightened and the valve clearance reset.

WATER DIRECTORS

Water directors **(1)** are provided to direct the flow of coolant to critical areas for maximum cooling effectiveness. They are pressed into place in the head, after aligning the notch on the director with the V-mark on the head.

The seals **(2)** and copper ferrules **(3)**, which seal the water passages between the head and top of the block, are replaceable. The seal is installed over the flange on the ferrule. This can be easily done if the inner surface of the seal is first coated with liquid soap.

When installing the ferrules and seals, the rolled edge of the ferrule should be toward the head to facilitate installation of the head.

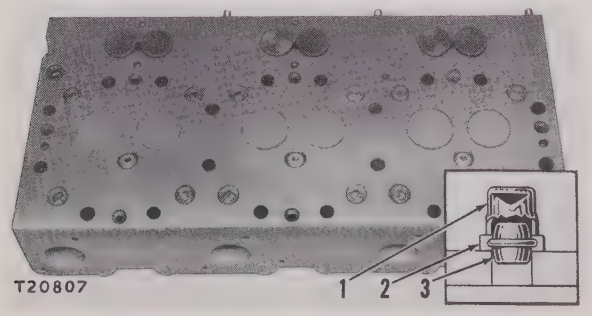

CYLINDER HEAD SHOWING WATER DIRECTORS
1–Director. 2–Seal. 3–Ferrule.

PRECOMBUSTION CHAMBERS

The precombustion chamber **(3)** is threaded into the cylinder head **(5)** and sealed at the top of the head with a retainer **(1)** and two O-ring seals **(2)**.

The O-ring seals prevent leakage of coolant.

The gasket **(4)** prevents combustion gases from entering the cooling system, as well as preventing the leakage of coolant into the cylinder.

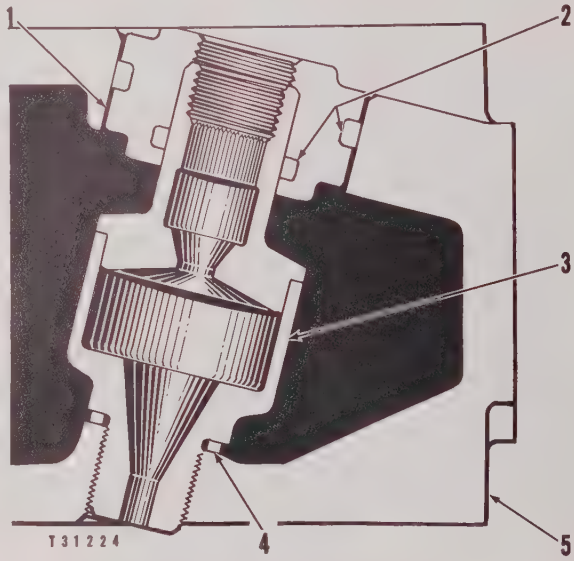

PRECOMBUSTION CHAMBER
1–Retainer. 2–Rubber seals. 3–Precombustion chamber. 4–Gasket. 5–Cylinder head.

Precombustion Chamber Removal and Installation

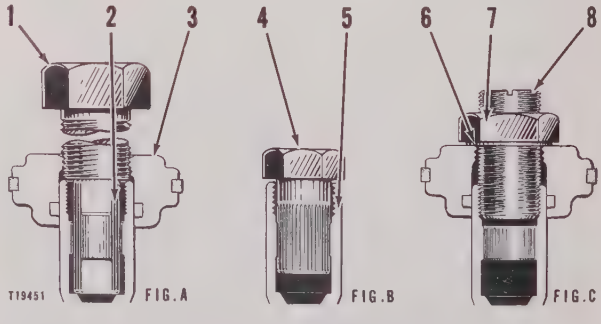

PRECOMBUSTION CHAMBER TOOLS
1–1A2208 Screw. 2–5F9072 Spacer. 3–Retainer. 4–5F8353 Wrench Adapter. 5–Precombustion chamber. 6–4B4285 Washer. 7–L1017 Nut. 8–6F5515 Screw.

1. Remove the fuel injection valve assembly.
2. Place a 5F9072 Spacer **(2)** in the precombustion chamber and turn the 1A2208 Screw **(1)** in the retainer **(3)** against the spacer until the retainer comes out of the cylinder head.

3. Place the 5F8353 Wrench Adapter **(4)** in the serrations of the precombustion chamber and remove the precombustion chamber from the head.

NOTE

If a cylinder head has collected an excessive amount of scale or rust within the water jacket, remove the cylinder head and clean it thoroughly. This is also an indication that the entire cooling system should be cleaned.

4. Place a new gasket, coated on the bottom side with a thin layer of grease, in the head. The grease will help retain the washer while installing the precombustion chamber.

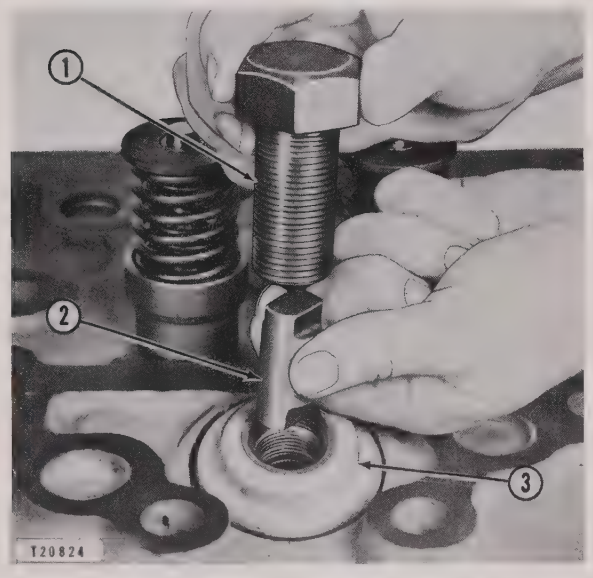

REMOVING PRECOMBUSTION CHAMBER RETAINER
1–1A2208 Screw. 2–5F9072 Spacer. 3–Retainer.

5. Insert the precombustion chamber in the head and tighten with the 5F8353 Wrench Adapter **(4)**. See SPECIFICATIONS for the correct torque when installing the precombustion chamber.

6. Coat the chamfered portion of the cylinder head and the new rubber seals with soap.

7. Place the retainer over the precombustion chamber and start it into the cylinder head and onto the precombustion chamber.

CAUTION

When starting the retainer do not use force until the seals are properly started. If the seals are not started correctly, they will be damaged and will not seal effectively.

8. Using the 4B4285 Washer **(6)**, the 6F5515 Screw **(8)**, and the L1017 Nut **(7)**, as illustrated, tighten the retainer until it is bottomed.

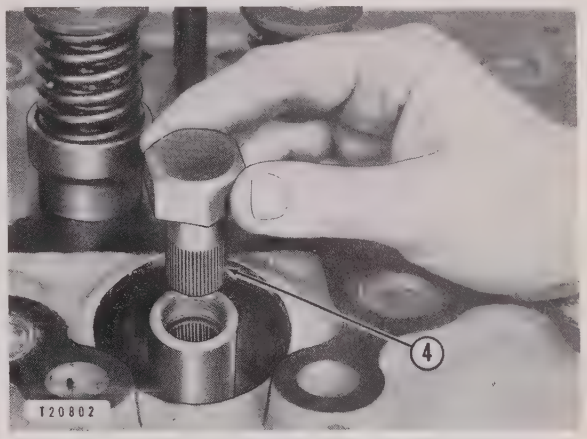

PRECOMBUSTION CHAMBER ADAPTER
4–5F8353 Wrench Adapter.

Cylinder Heads
(Natural Gas Engines)

Two cylinder heads are used on this engine. Water directors direct the flow of coolant toward the valve ports and spark plug adapters.

Rubber seals and ferrules seal the water passages between the cylinder heads and the cylinder block.

REMOVAL

1. Drain the coolant from the engine.

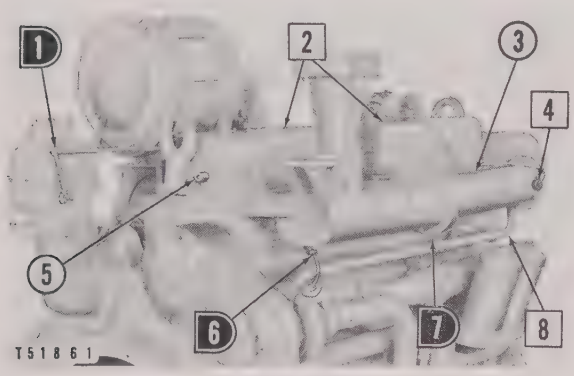

PREPARING TO REMOVE CYLINDER HEADS
☐ Remove ◗ Disconnect

1–Governor linkage. 2–Valve covers. 3–Exhaust manifold. 4–Heat indicator bulb. 5–Compression release rod. 6–Bleed line. 7–Bleed line. 8–Water line.

2. Remove the exhaust manifold **(3)**. See the covering topic.
3. Disconnect the compression release rod **(5)** between the two cylinder heads.
4. Mark the wires leading to the magneto **(16)** and to the spark plugs so they can be replaced in the same position and remove wiring harness **(15)**.

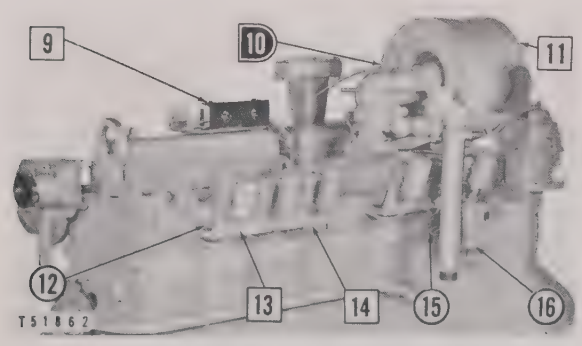

PREPARING TO REMOVE CYLINDER HEADS
☐ Remove ◗ Disconnect

9–Instrument bracket. 10–Choke control. 11–Air cleaner. 12–Inlet manifold. 13–Coil wires (six). 14–Coil brackets (two). 15–Wiring harness. 16–Magneto.

5. Remove the inlet manifold **(12)**. See the covering topic.
6. Disconnect the oil lines and remove the rocker arm assemblies from each cylinder head. See the covering topic.
7. Remove the valve cover bases.
8. Remove the cylinder heads **(17)** as shown, and remove, inspect and clean the ferrules and seals **(18)**.

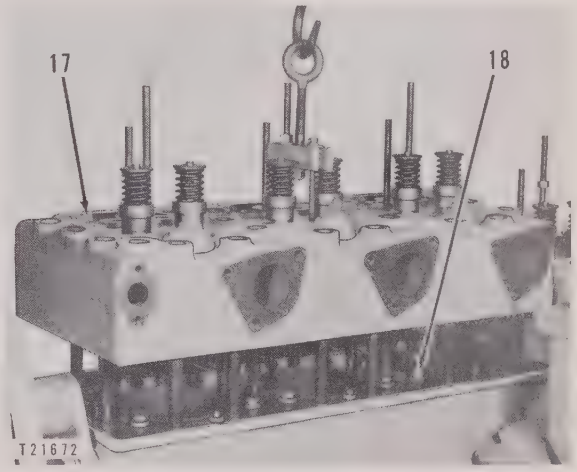

CYLINDER HEAD REMOVAL
17–Cylinder head. 18–Water ferrule and seal.

9. Inspect all gaskets and seals and replace, if necessary.

INSTALLATION

New cylinder head gaskets should be installed.

1. Place the gasket on the cylinder block.
2. Install the ferrules and seals.
3. Carefully lower the head on the block. Proper head alignment is assured by dowel pins located in the block.

CAUTION

When installing the head on the cylinder block, see that the ferrules and seals are properly installed and started properly into the recessed holes in the head. Rock the head gently until it seats flatly on the head gasket.

4. Install the cylinder head stud nuts. See the topic, SPECIFICATIONS, for the correct tightening sequence and torque values.
5. Install the push rods and valve rocker mechanism. Securely tighten the nuts which hold the

valve rocker mechanism in place. Set the valve clearance and the compression release clearance as given in the topic, SPECIFICATIONS.

NOTE

Check the torque on the stud nuts after engine run-in. If the torque value is lower than that listed under the topic, SPECIFICATIONS, they should be retightened and the valve clearance reset.

SPARK PLUG ADAPTERS

The spark plug adapter **(1)** is threaded into the cylinder head **(4)** and sealed at the top of the head with an O-ring seal **(2)** and at the bottom with a gasket **(3)**.

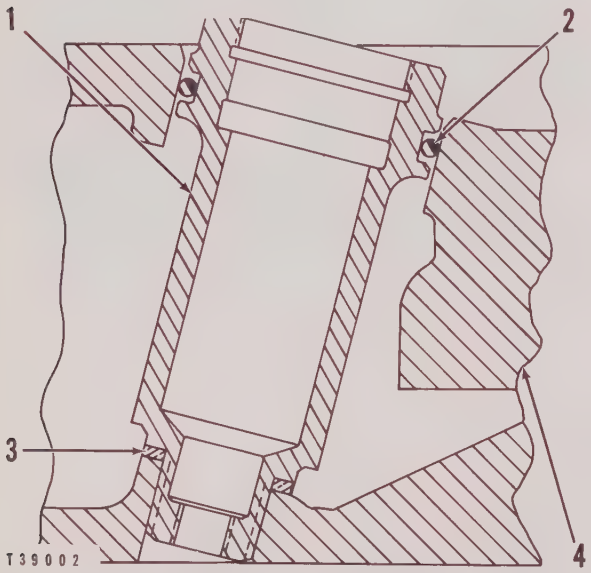

SPARK PLUG ADAPTER
1–Spark plug adapter. 2–O-ring seal. 3–Gasket. 4–Cylinder head.

Removal and Installation

1. Remove the cover **(5)** and the insulator **(3)** from the spark plug adapter **(1)** and the spark plug **(4)**.
2. Using the 3B9082 Spark Plug Wrench in conjunction with the 3563-A Spark Plug Wrench, remove the spark plug from the adapter.
3. Remove the adapter from the cylinder head using the 1F479 Wrench and the 1 5/16" 8H8536 Socket.

NOTE

If the cylinder head has collected an excessive amount of scale or rust within the water jacket, remove the cylinder head and clean it thoroughly. This is also an indication that the entire cooling system should be cleaned.

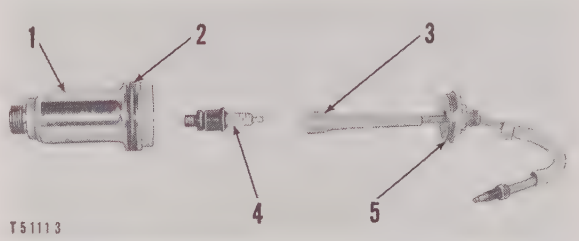

SPARK PLUG AND ADAPTER
1–Adapter. 2–O-ring seal. 3–Insulator. 4–Spark plug. 5–Cover.

4. Install a new gasket in the cylinder head. A thin layer of grease will help retain the gasket while installing the spark plug adapter.
5. Coat the chamfered portion of the cylinder head and the seal **(2)** with oil to aid in installation.
6. Install the spark plug adapter and spark plug, and tighten to the torque value as given in the topic, SPECIFICATIONS.

WATER DIRECTORS

Water directors **(1)** are provided to direct the flow of coolant to critical areas for maximum cooling effectiveness. They are pressed into place in the head, after aligning the notch on the director with the V-mark on the head.

The seals **(2)** and copper ferrules **(3)**, which seal the water passages between the head and top of the block, are replaceable. The seal is installed over the flange on the ferrule.

When installing the ferrules and seals, the rolled edge of the ferrule should be toward the head to facilitate installation of the head.

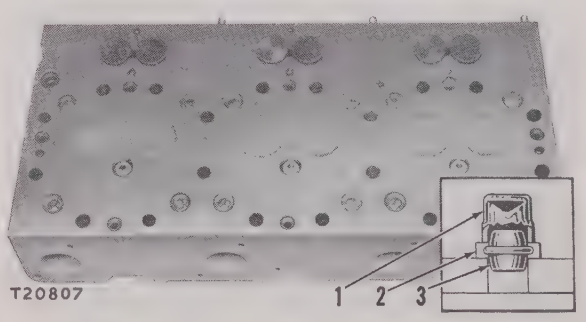

CYLINDER HEAD SHOWING WATER DIRECTORS
1–Director. 2–Seal. 3–Ferrule.

Valves and Valve Mechanism

The valves and the valve mechanism admit inlet air and release exhaust gases at precisely timed intervals during engine operation.

This engine is of the four-stroke cycle, having four separate strokes required for each cylinder to complete one cycle. The camshaft is timed to the crankshaft and turns at one-half engine speed.

The inlet valve is open during the inlet stroke of the piston to permit air to enter the cylinder. After the compression and power strokes, the exhaust valve is opened to permit the piston, in moving up on the exhaust stroke, to force the burned gases from the cylinder.

Properly adjusted valves will operate for many hours before they need to be reconditioned. Eventually, however, the valve faces and seats can become pitted which ultimately allows compression pressure losses. Valve leakage can often be heard distinctly in the manifolds.

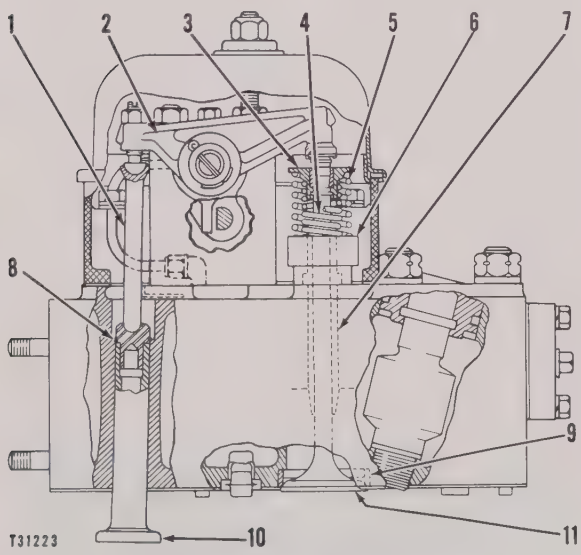

VALVES AND VALVE MECHANISM
1–Push rod. 2–Rocker arm. 3–Retainer. 4–Inner spring. 5–Outer spring. 6–Rotator. 7–Valve stem bushing. 8–Valve lifter retainer. 9–Insert. 10–Valve lifter. 11–Valve.

VALVE OPERATION

One inlet and one exhaust valve are used for each cylinder. The seats consist of hardened inserts **(5)** driven into the cylinder head. The valve mechanism is entirely enclosed. The valves **(12)** are opened by the cams on the camshaft. The lifters **(4)**, which are retained in the head by snap rings **(3)**, follow the cams and this movement is transmitted through short push rods **(2)** and rocker arms **(1)**. Rocker arms are drilled for lubrication and use a hardened steel button on the valve end to reduce side thrust on the valve stem.

Valves are closed by springs **(9)**. The springs are held compressed by the retainer **(7)** and locks **(6)**. Valve spring retainers are equipped with seals **(8)** to prevent oil running down the valve stems. The valves move in replaceable valve stem bushings **(11)**, which are a press fit in the head.

The valve rotator **(10)**, incorporated in the valve arrangement, rotates the valve approximately one degree each time the valve is opened. It consists of a valve seating collar, spring washer, and a retainer body.

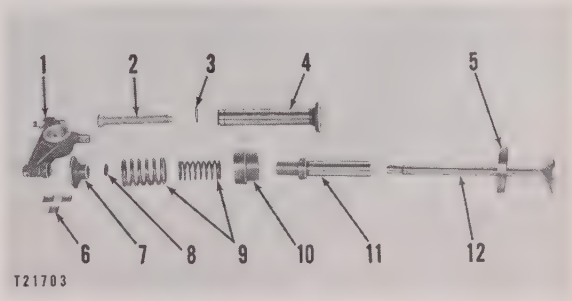

VALVE MECHANISM
1–Rocker arm. 2–Push rod. 3–Ring. 4–Lifter. 5–Insert. 6–Locks. 7–Retainer. 8–Seal. 9–Springs. 10–Valve rotator. 11–Valve stem bushing. 12–Valve.

As the valves are pushed off of their seats, the valve springs are compressed, which, in turn exert force against the valve spring seating collar **(14)**,

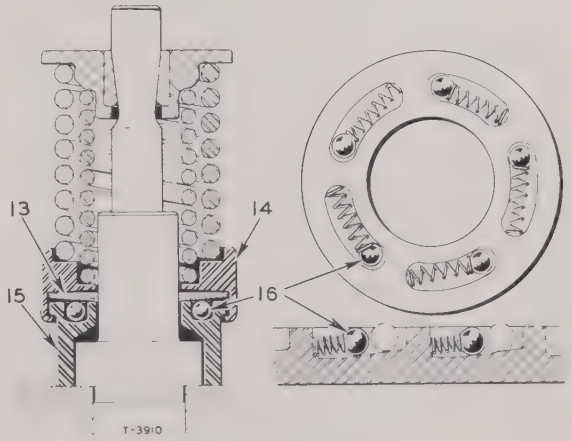

VALVE ROTATOR
13–Spring washer. 14–Spring seating collar. 15–Retainer body. 16–Steel ball.

and this, in turn, compresses the spring washer **(13)**. The retainer body **(15)** contains five steel balls **(16)**, which are held on the high end of an incline by springs.

As the spring washer is compressed, the steel balls are forced down the incline, thus rotating the spring washer, the valve spring seating collar, the valve springs and the valve.

As the valve closes, the tension is released from the spring washer so that it no longer contacts the steel balls. Therefore, the travel of the balls back to their original position has no rotating effect on the valve.

To determine whether a valve rotator is operating, observe the serrations on the top of the valve spring retainer. If the serrations do not rotate during operation, replace the valve rotator as a unit.

VALVE ROCKER ARM ASSEMBLY

Removal

1. Remove the air cleaner cap or the precleaner if so equipped.
2. Remove the air cleaner **(2)**.
3. Remove the turbocharger **(5)**. See the covering topic.
4. Disconnect the heat indicator cable **(4)** from the head.
5. Disconnect the compression release rod **(3)**.
6. Remove the valve cover **(1)**.
7. Remove the bolt from the coupling **(9)** and slide the coupling back to separate the two shafts.

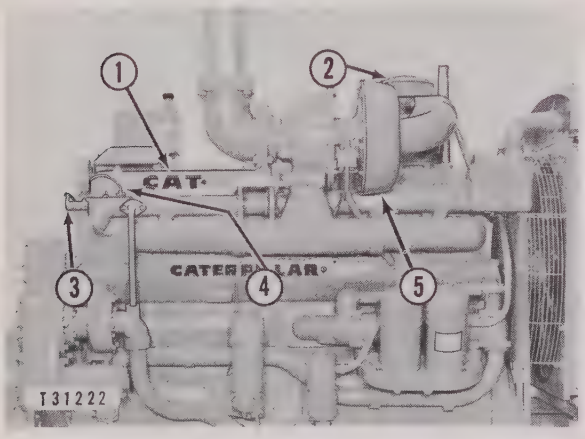

PREPARING TO REMOVE ROCKER ARM ASSEMBLY
1–Valve cover. 2–Air cleaner. 3–Compression release rod. 4–Heat indicator cable. 5–Turbocharger.

8. Remove the oil line from the rocker arm assembly **(7)**.
9. Remove the bolts that secure the valve cover base **(8)** to the head.

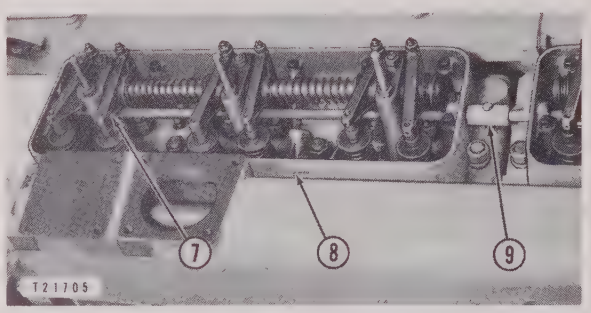

PREPARING TO REMOVE ROCKER ARM ASSEMBLY
7–Rocker arm assembly. 8–Valve cover base. 9–Coupling.

10. Remove the nuts from the studs that secure the rocker arm assembly to the head.
11. Remove the rocker arm assembly and valve cover base as an assembly.
12. Remove the push rods.

Disassembly

1. Remove shaft positioning bolt **(2)** from the valve cover base **(1)**.
2. Remove the bolt securing the compression release lock cam **(4)** and slide the lock cam off the key.
3. Remove the key.
4. Remove the cam plunger **(5)** and spring.
5. Remove the key **(6)** from one end of the compression release shaft **(3)**.
6. Pull the shaft from the valve cover base and slide the lock cam from the shaft.
7. Remove the rocker arm assembly from the valve cover base.

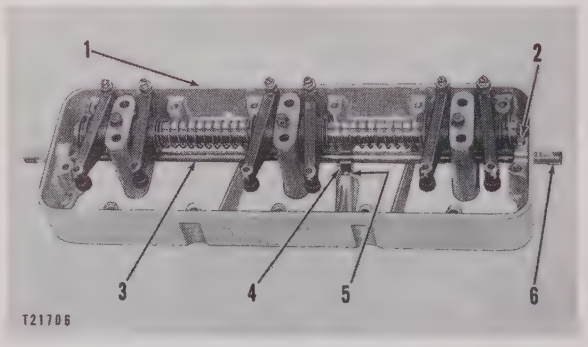

VALVE ROCKER ARM DISASSEMBLY
1–Valve cover base. 2–Bolt. 3–Compression release shaft. 4–Lock cam. 5–Plunger. 6–Key.

8. Remove the cotter pin **(12)** and slide off the washers **(10)** and **(11)**, spring **(16)** and rocker arm **(9)** from one end of the shaft **(13)**.

9. Remove the shaft positioning bolt and slide off the support bracket **(8)**, rocker arm, spring and washers.
10. Remove the center rocker arms in the same manner.
11. To remove the outer rocker arms and bracket, remove the fitting **(7)** and slide off the spring.
12. The button **(14)** can be removed from the rocker arm socket by removing the lock ring **(15)**.

The bearings in the rocker arms should be replaced if the clearance between the bearings and shaft exceeds .008".

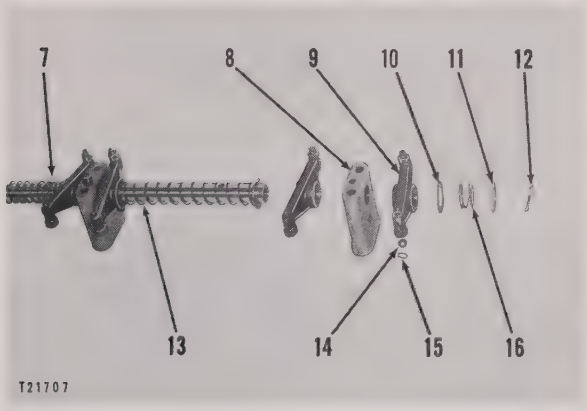

DISASSEMBLING ROCKER ARM
7–Fitting. 8–Bracket. 9–Rocker arm. 10–Washer. 11–Washer. 12–Cotter pin. 13–Shaft. 14–Button. 15–Lock ring. 16–Spring.

Assembly

In order to install new rocker arm bearings properly, a driver, similar to the one shown in the sketch, should be used. Carefully align the oil holes before the bearing is pressed into place.

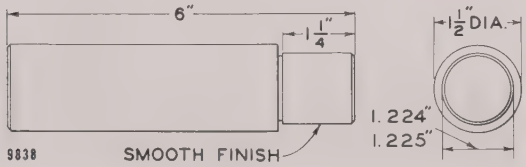

TOOL FOR INSTALLING ROCKER ARM BEARINGS

Assemble the rocker arm assembly in reverse order of disassembly.

VALVES

Removal

Remove the cylinder head as described in the covering topic.

Compress the valve springs and remove the locks. Release the compressor and remove the retainers, springs, and the valve rotators. The valves can then be removed.

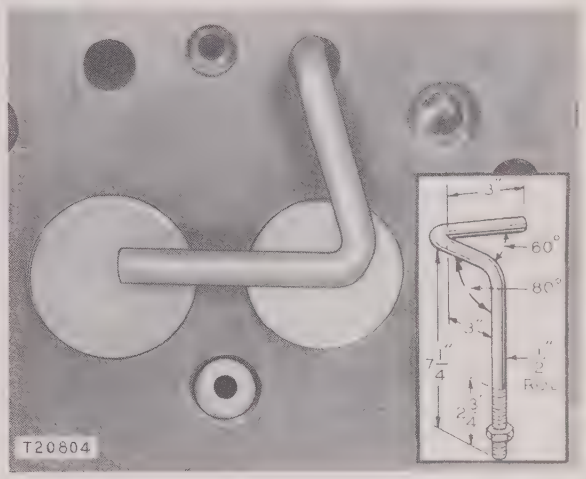

VALVE HOLDING TOOL

The illustration shows the 7F4292 Valve Spring Compressor Group being used. The adapter **(1)**, which is part of this group, threads onto a rocker arm stud **(2)**.

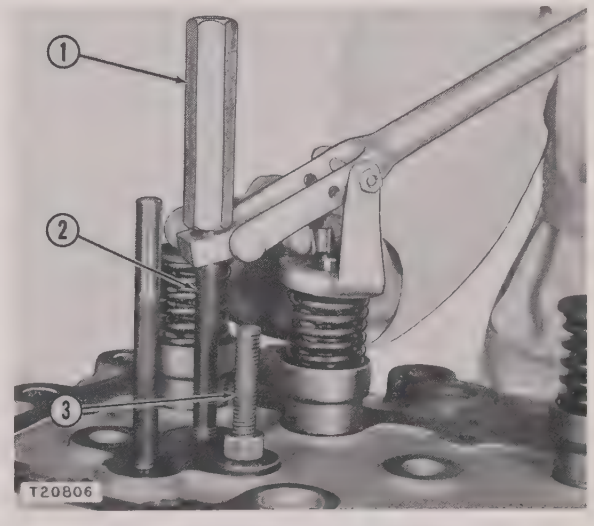

COMPRESSING VALVE SPRING
1–Adapter. 2–Rocker arm stud. 3–Threaded end of valve holding tool.

Also shown is a simple tool which can be made to hold the valves in place while installing the valve springs. The threaded end **(3)** of this tool, can also be used on other models of heads.

Cleaning

After removing a cylinder head from the diesel engine and the valve assemblies from the head, carefully scrape all carbon accumulations from the parts. Be sure to clean the valves thoroughly, as well as the valve stems, valve stem bushings and valve ports.

Valve Inspection and Reconditioning

The valves should always be carefully inspected. If the valve faces are pitted or making poor contact with the valve seat, they should be refaced at an angle of 29¼° in a valve refacing machine. If the valves are deeply pitted, badly warped or worn, they should be replaced.

In refacing, be sure there is sufficient metal left on the head of the valve to prevent "dishing" of the valve in service. The minimum valve lip thickness should be observed. See the SPECIFICATIONS.

The wear of the valve stems can be checked by the use of an 0" to 1" micrometer. The valve stem should be measured in three places. Use the measurement near the top of the valve stem, where the valve stem does not touch the bushing, as the original valve stem diameter.

CAUTION

In handling valves, caution should be exercised to prevent nicking or scratching the radius between the valve face and stem. A very small nick can cause the valve head to break off during service.

See the SPECIFICATIONS, for clearances and tolerances.

Checking Valve Seats

Coat the valve face with Prussian blue and rotate the valve in the valve seat. Remove the valve and examine the contact pattern on both valve and seat. A line of contact near the top and around the entire circumference of the valve seat should indicate line contact with the valve.

The 30° valve seats can be ground with a valve seat grinding tool. Care should be exercised in its use, as too much material may be removed quickly and unknowingly.

After the valve seats have been ground until they are smooth and concentric with the valve guides, all parts should be cleaned thoroughly.

Valve Installation

Exhaust valves marked "EX" on the valve head should be installed in the exhaust ports; inlet valves marked "IN" on the valve head should be installed in the inlet ports.

Inlet valves have a small groove around the top of the stem for identification after the head has been installed.

Lubricate the stems and bushings for initial starting.

Insert the valve through the valve stem bushing and install the springs and the spring retainer. Compress the springs with a compressor, such as shown in the topic, VALVE REMOVAL. Insert the locks, large end down, and tap the retainer lightly as the spring compressor is removed, to make sure the locks are seated properly in the retainer.

VALVE STEM BUSHINGS

The inlet and exhaust valves operate in replaceable valve stem bushings. After the valves have been removed, clean the valve stems and the valve stem bushings.

The valve stem bushing wear should be checked with a gauge or by the pilots furnished with some makes of valve seat regrinding equipment. Generally the pilots are supplied in graduated sizes. Use a micrometer to measure the diameter of the largest pilot that will pass through the bushing. This dimension will indicate the wear in the bushing, excluding possible out-of-roundness.

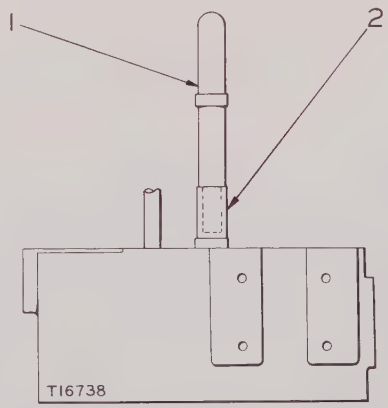

INSTALLING VALVE STEM BUSHING
1–4H446 Driver. 2–Valve stem bushing.

The valve stem bushing **(2)** can be pressed or driven in or out of the head by the 4H446 Driver **(1)**.

The bushings should be pressed into place carefully with the type of driver or inserting tool shown in the accompanying illustration, to prevent damage

to the bushing. A reamer run through the bushings after they are installed will insure correct valve stem clearance. See the SPECIFICATIONS.

VALVE TIMING

The valve timing is controlled by the setting of the timing gears. Timing is shown in the topic, TIMING GEARS.

VALVE LIFTERS

The valve lifters are located in the right side of the cylinder head and can be removed in the following manner:

1. Remove the cylinder head. See the covering topic, CYLINDER HEAD REMOVAL.
2. Remove the snap ring that secures the valve lifter in the cylinder head.
3. Remove the lifter as illustrated.

VALVE LIFTER REMOVAL

COMPRESSION RELEASE MECHANISM

The compression release mechanism opens the inlet valve on each cylinder, allowing the diesel engine to be easily cranked.

The compression release shaft **(3)** is locked in either the RUN or START position by a spring-loaded plunger **(4)** which engages a notch on the compression release shaft. Each inlet valve rocker arm has an arm which contacts the high portion of the shaft and in turn holds the valve open. When the compression release is in the run position, flat sections on the shaft allow normal operation of the inlet valves.

To remove the shaft, remove the setscrew and slide the lock cam **(1)** off the key **(2)**. Remove the key, plunger and spring **(5)**. The shaft will now slide out of the rocker arm assembly and valve cover base. Care should be taken not to damage the oil seal in the valve cover base.

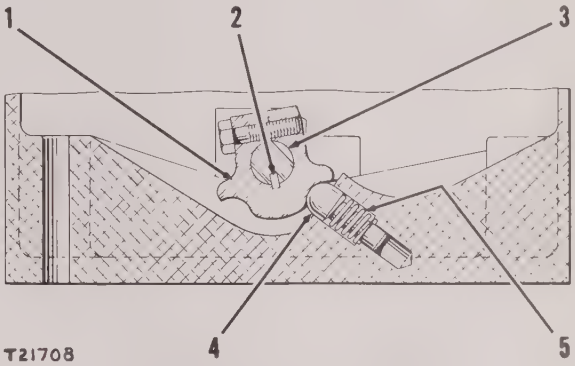

COMPRESSION RELEASE MECHANISM
1–Lock cam. 2–Key. 3–Shaft. 4–Plunger. 5–Spring.

Valves and Valve Mechanism

The valves and the valve mechanism admit inlet air and release exhaust gases at precisely timed intervals during engine operation.

This engine is of the four-stroke cycle, having four separate strokes required for each cylinder to complete one cycle. The camshaft is timed to the crankshaft and turns at one-half engine speed.

The inlet valve is open during the inlet stroke of the piston to permit air to enter the cylinder. After the compression and power strokes, the exhaust valve is opened to permit the piston, in moving up on the exhaust stroke, to force the burned gases from the cylinder.

Properly adjusted valves will operate for many hours before they need to be reconditioned. Eventually, however, the valve faces and seats may become pitted which ultimately allows compression pressure losses.

Worn piston rings, improperly adjusted valves or a damaged cylinder head gasket will result in loss of compression; therefore, these items should be checked before concluding that the valves are at fault.

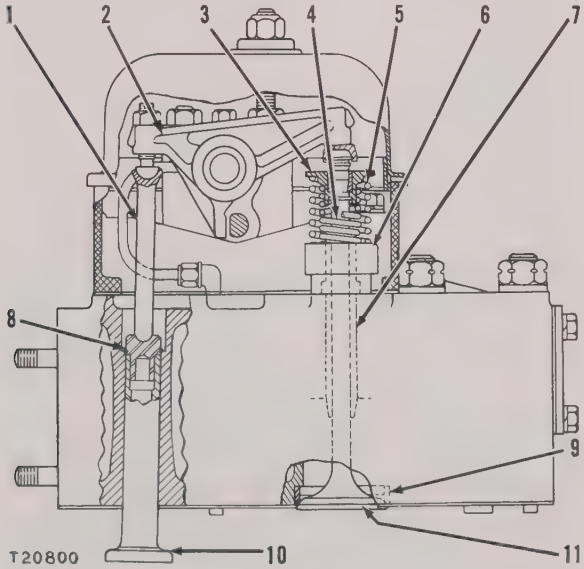

VALVES AND VALVE MECHANISM
1–Push rod. 2–Rocker arm. 3–Retainer. 4–Inner spring. 5–Outer spring. 6–Rotator. 7–Valve guide. 8–Valve lifter retainer. 9–Insert. 10–Valve lifter. 11–Valve.

VALVE OPERATION

One inlet and one exhaust valve are used for each cylinder. The seats consists of hardened inserts **(5)** driven into the cylinder head. The valve mechanism is entirely enclosed. The valves **(12)** are opened by the cams on the camshaft. The lifters **(4)**, which are retained in the head by snap rings **(3)**, follow the cams and this movement is transmitted through short push rods **(2)** and rocker arms **(1)**. Rocker arms are drilled for lubrication and use a hardened steel button on the valve end to reduce side thrust on the valve stem.

Valves are closed by springs **(9)**. The springs are held compressed by the retainer **(7)** and locks **(6)**. Valve spring retainers are equipped with seals **(8)** to prevent oil running down the valve stems. The valves move in replaceable valve guides **(11)**, which are a press fit in the head.

The valve rotator **(10)**, incorporated in the valve arrangement, rotates the valve approximately one degree each time the valve is opened. It consists of a valve seating collar, spring washer, and a retainer body.

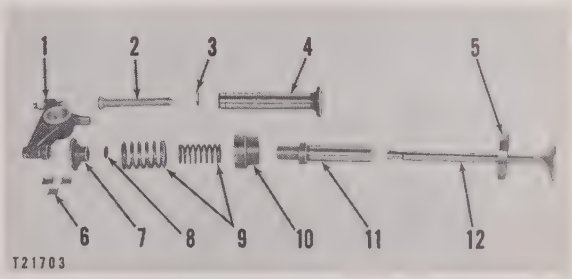

VALVE MECHANISM
1–Rocker arm. 2–Push rod. 3–Ring. 4–Lifter. 5–Insert. 6–Locks. 7–Retainer. 8–Seal. 9–Springs. 10–Valve rotator. 11–Valve guide. 12–Valve.

As the valves are pushed off their seats, the valve springs are compressed, which, in turn exert force against the valve spring seating collar **(14)**, and this, in turn, compresses the spring washer

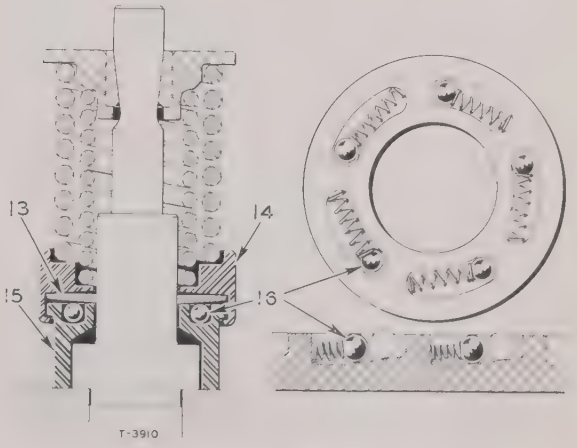

VALVE ROTATOR
13–Spring washer. 14–Spring seating collar. 15–Retainer body. 16–Steel ball.

(13). The retainer body **(15)** contains five steel balls **(16)**, which are held on the high end of an incline by springs.

As the spring washer is compressed, the steel balls are forced down the incline, thus rotating the spring washer, the valve spring seating collar, the valve springs and the valve.

As the valve closes, the tension is released from the spring washer so that it no longer contacts the steel balls. Therefore, the travel of the balls back to their original position has no rotating effect on the valve.

To determine whether a valve rotator is operating, observe the serrations on the top of the valve spring retainer. If the serrations do not rotate during operation, replace the valve rotator as a unit.

ROCKER ARM ASSEMBLY

Removal and Installation

1. Disconnect the compression release linkage.
2. Remove the valve cover.
3. Remove the bolt **(5)** from the coupling **(4)** and slide the coupling back to separate the two shafts.

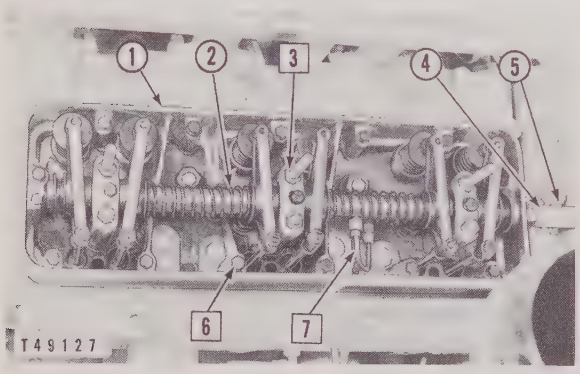

PREPARING TO REMOVE ROCKER ARM ASSEMBLY

☐ **Remove**

1–Valve cover base. 2–Rocker arm assembly. 3–Nut (six). 4–Coupling. 5–Bolt. 6–Bolt (thirteen). 7–Oil line.

4. Remove the rocker arm assembly **(2)** and the valve cover base **(1)** as an assembly.
5. Inspect all parts and gaskets for damage and replace if necessary.

Disassembly

1. Remove the bolt securing the compression release lock cam **(4)** and slide the lock cam off the key.
2. Remove the key.

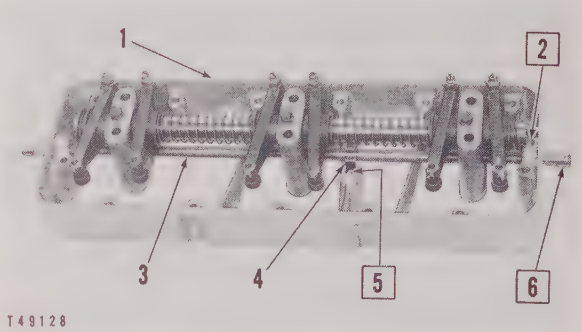

ROCKER ARM DISASSEMBLY

☐ **Remove**

1–Valve cover base. 2–Bolt. 3–Compression release shaft. 4–Lock cam. 5–Plunger. 6–Key.

3. Remove the shaft **(3)** from the valve cover base **(1)** and slide the lock cam **(4)** from the shaft.
4. Remove the rocker arm assembly from the valve cover base.

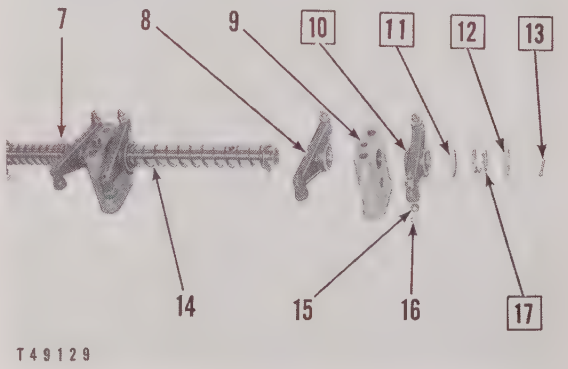

DISASSEMBLING ROCKER ARM

☐ **Remove**

7–Fitting. 8–Rocker arm. 9–Bracket. 10–Rocker arm. 11–Washer. 12–Washer. 13–Cotter pin. 14–Shaft. 15–Button. 16–Lock ring. 17–Spring.

5. Remove the shaft positioning bolt and slide off the support bracket **(9)**, rocker arm **(8)**, spring and washers.
6. Remove the center rocker arms in the same manner.
7. To remove the outer rocker arms and bracket, remove the fitting **(7)** and slide off the spring.
8. The button **(15)** can be removed from the rocker arm socket by removing the lock ring **(16)**.

The bearings in the rocker arms should be inspected and replaced if necessary. See the topic, SPECIFICATIONS.

Assembly

In order to install new rocker arm bearings properly, a driver, similar to one one shown in the sketch, should be used. Carefully align the oil holes before the bearing is pressed into place.

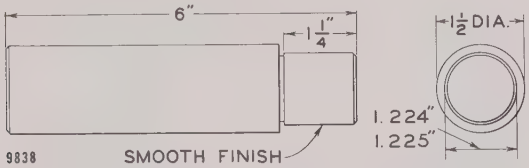

TOOL FOR INSTALLING ROCKER ARM BEARINGS

Assemble the rocker arm assembly in reverse order of disassembly.

VALVE ADJUSTMENT

The valve clearance adjustment should be made while the engine is hot, either while the engine is running or before it has been stopped twenty minutes after having run long enough to thoroughly warm up. If the adjustment is made with the engine stopped and is not completed during this twenty minute interval, start the engine and allow it to warm up. The compression release lever must be in the run position whenever valve clearance is being checked or adjusted.

1. Remove the valve mechanism top cover.
2. Loosen the adjusting screw locknut **(1)**.
3. Turn the adjusting screw **(2)** to allow the thickness gauge **(3)** to pass between the top of the valve stem and the end of the valve rocker at the clearance. See the topic, SPECIFICATIONS, for correct valve clearance.
4. Tighten the adjusting screw locknut and check the adjustment.

If the adjustment is made with the engine stopped, turn the engine until the valve closes and the push rod is at its lowest point.

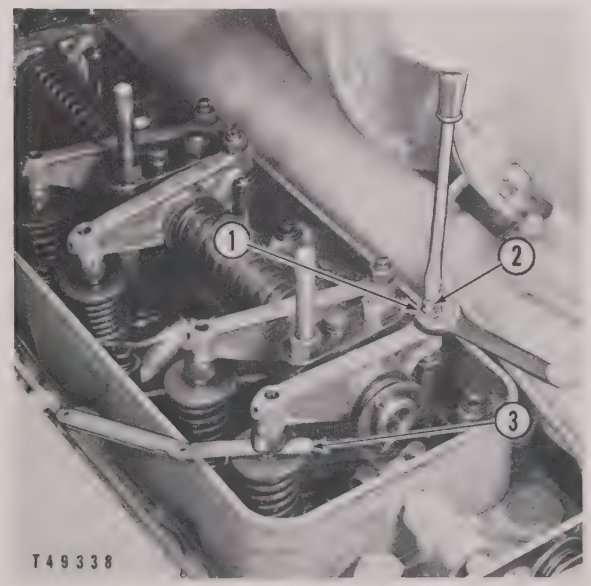

VALVE CLEARANCE ADJUSTMENT
1–Locknut. 2–Adjusting screw. 3–Thickness gauge.

VALVES

Removal

Remove the cylinder head. See the covering topic.

Place the cylinder head assembly on an 8F4421 Cylinder Head Stand.

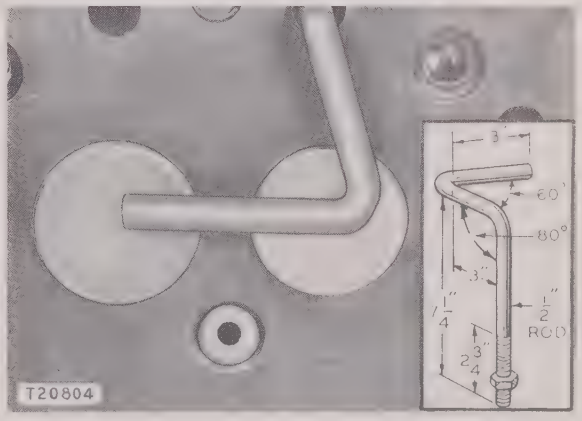

VALVE HOLDING TOOL

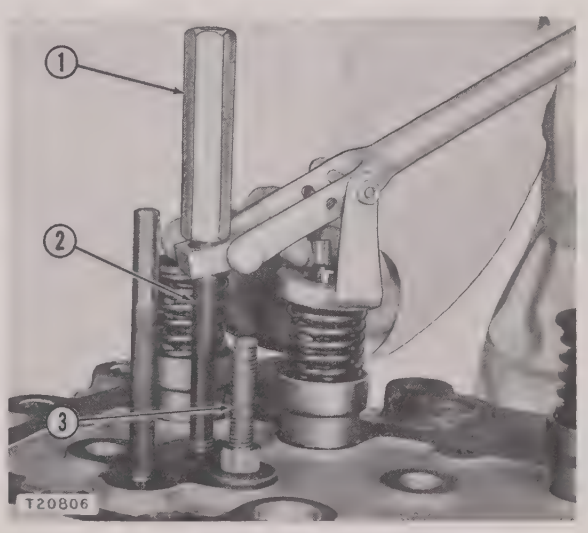

COMPRESSING VALVE SPRING
1–Adapter. 2–Rocker arm stud. 3–Threaded end of valve holding tool.

Compress the valve springs and remove the locks. Release the compressor and remove the retainer, springs, and the valve rotators. The valves can then be removed.

The illustration shows the 7F4292 Valve Spring Compressor Group being used. The adapter **(1)** which is a part of this group, threads onto a rocker arm stud **(2)**.

Also shown is a simple tool which can be made to hold the valves in place while installing the valve springs. The threaded end **(3)** of this tool can also be used on other models of heads.

Cleaning

After removing the cylinder head from the diesel engine and the valve assemblies from the head, carefully scrape all carbon accumulations from the ports. Be sure to clean the valves thoroughly, as well as the valve stems, valve guides and valve ports.

Valve Inspection and Reconditioning

The valves should always be carefully inspected. If the valve faces are pitted or are making poor contact with the valve seat, they should be refaced in a valve refacing machine. If the valves are deeply pitted, badly warped or worn, they should be replaced.

In refacing, be sure there is sufficient metal left on the head of the valve to prevent "dishing" of the valve in service.

The wear of the valve stems can be checked by the use of a 0" to 1" micrometer. The valve stem should be measured in three places. Use the measurement near the top of the valve stem, where the valve stem does not touch the guide, as the original valve stem diameter.

CAUTION

In handling valves, caution should be exercised to prevent nicking or scratching the radius between the valve face and stem. A very small nick can cause the valve head to break off during service. See the topic, SPECIFICATIONS, for valve dimensions.

Checking Valve Seats

Coat the valve face with Prussian blue and rotate the valve in the valve seat. Remove the valve and examine the contact pattern on both valve and seat. A line of contact near the top and around the entire circumference of the valve seat should indicate line contact with the valve.

The valve seats can be ground with a valve seat grinding tool. Care should be exercised in its use, as too much material may be removed quickly and unknowingly.

After the valve seats have been ground until they are smooth and concentric with the valve guides, all parts should be cleaned thoroughly.

Valve Installation

Exhaust valves, marked "EX" on the valve head, should be installed in the exhaust ports. Inlet valves, marked "IN" on the valve head, should be installed in the inlet ports.

Lubricate the stems and guides for initial starting.

Insert the valve through the valve guide and install the valve rotator, spring and the spring retainer. Compress the spring with a compressor, such as shown in the topic, VALVE REMOVAL. Insert the keepers, large end up, and tap the retainer lightly as the spring compressor is removed, to make sure the keepers are seated properly in the retainer.

VALVE GUIDES

The inlet and exhaust valves operate in replaceable valve guides. After the valves have been removed, clean the valve stems and guides.

The valve guide wear should be checked with a gauge or by the pilots furnished with some makes of valve seat regrinding equipment. Generally the pilots are supplied in graduated sizes. Use a micrometer to measure the diameter of the largest pilot that will pass through the guide. This dimension will indicate the wear in the guide excluding possible out-of-roundness.

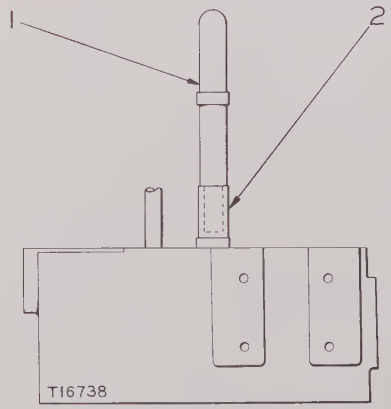

INSTALLING VALVE GUIDE
1–4H446 Driver. 2–Valve guide.

The valve guide **(2)** can be pressed or driven in or out of the head with the 4H446 Driver **(1)**. The

inlet valve guide **(4)** can be identified from the exhaust valve guide **(3)** by the tapered end as shown.

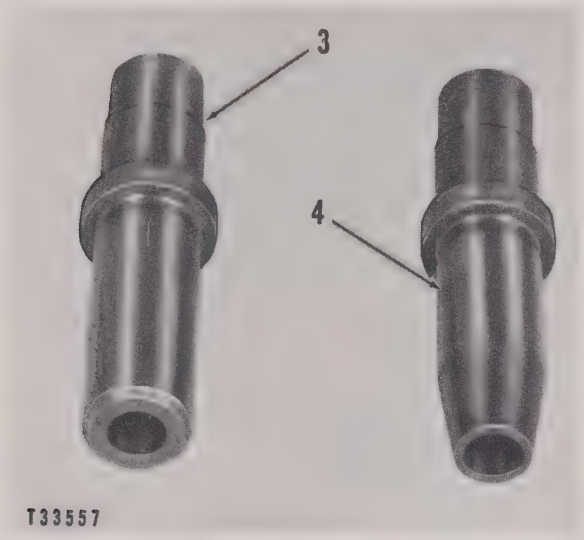

VALVE GUIDES
3–Exhaust valve guide. 4–Inlet valve guide.

The valve guides should be pressed into place carefully with the type of driver or inserting tool shown in the accompanying illustration, to prevent damage to the guide. A .499″ - .500″ reamer run through the guides after they are installed will insure correct valve stem clearance.

VALVE LIFTERS

The valve lifters are located in the right side of the cylinder head and can be removed in the following manner:

1. Remove the cylinder head. See the covering topic, CYLINDER HEAD REMOVAL.

VALVE LIFTER REMOVAL

2. Remove the snap ring that secures the valve lifter in the cylinder head.
3. Remove the lifter as illustrated.

COMPRESSION RELEASE MECHANISM

The compression release mechanism opens the inlet valve on each cylinder, allowing the diesel engine to be easily cranked.

The compression release shaft **(3)** is locked in either the RUN or START position by a spring-loaded plunger **(4)** which engages a notch on the compression release shaft. Each inlet valve rocker arm has an arm which contacts the high portion of the shaft and in turn holds the valve open. When the compression release is in the run position, flat sections on the shaft allow normal operation of the inlet valves.

To remove the shaft, remove the setscrew and slide the lock cam **(1)** off the key **(2)**. Remove the key, plunger and spring **(5)**. The shaft will now slide out of the rocker arm assembly and valve cover base. Care should be taken not to damage the oil seal in the valve cover base.

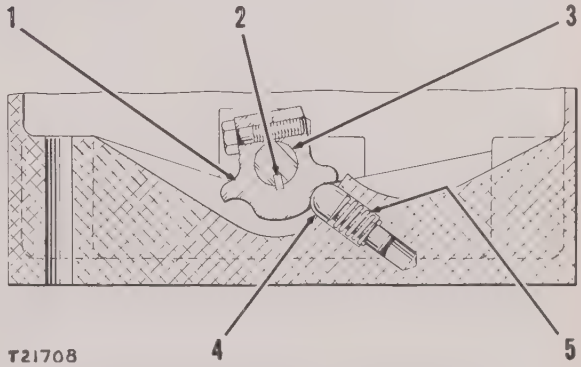

COMPRESSION RELEASE MECHANISM
1–Lock cam. 2–Key. 3–Shaft. 4–Plunger. 5–Spring.

VALVE TIMING

The valve timing is controlled by the setting of the timing gears. Timing is shown in the topic, TIMING GEARS.

Vibration Damper

This engine is equipped with a vibration damper to counteract torsional vibrations that occur within the operating speed range of the engine.

When an engine is running, the crankshaft twists back and forth about its axis due to the regular pattern of power impulses imposed along its length. This twisting of the crankshaft is called torsional vibration. A vibration damper installed on the end of the crankshaft opposite the flywheel helps to reduce torsional vibration and prevents it from building up to harmful proportions.

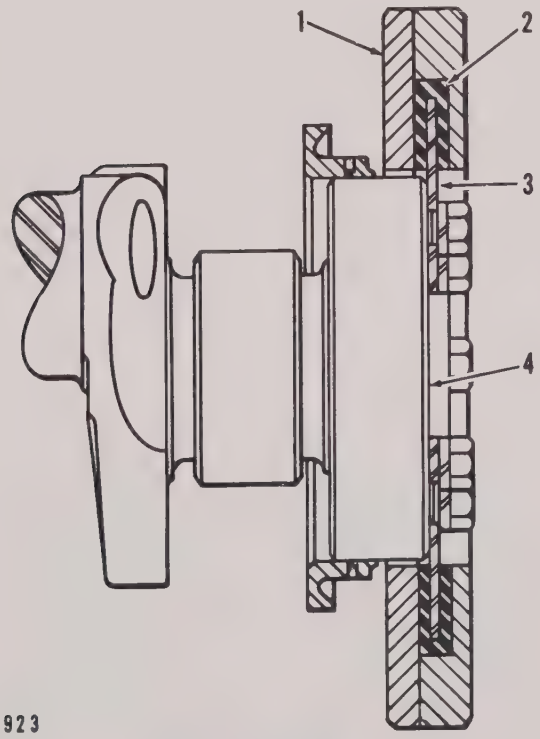

VIBRATION DAMPER (CROSS SECTION)
1–Ring. 2–Rubber. 3–Disc. 4–Flange.

The ring **(1)** is bonded by rubber **(2)** to a disc **(3)** which is bolted to the crankshaft flange **(4)**. The ring attempts to maintain a constant speed, and, by imposing a dragging force through the rubber, dampens out the vibrations of the crankshaft.

REMOVAL AND INSTALLATION
(Earlier Engines)

Loosen the locknuts **(1)**.

Loosen the fan belt adjustment bolt **(2)**.

Install in the reverse order of removal and adjust the fan belts. Tighten the bolts **(6)** evenly and diametrically and to the specified torque to prevent distortion of the damper. See the topic, SPECIFICATIONS.

NOTE

The bolt holes in the crankshaft flange are unequally spaced to prevent the damper from being installed backwards, which would cause interference with the fan blades.

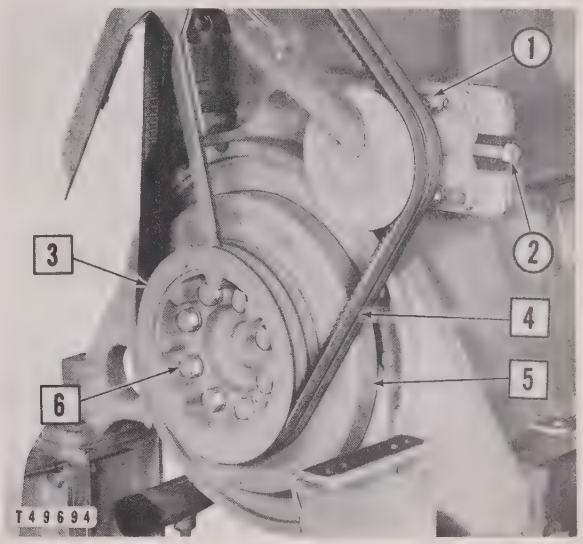

PREPARING TO REMOVE DAMPER

☐ **Remove**

1–Locknut. 2–Bolt. 3–Pulley. 4–Fan belts. 5–Vibration damper. 6–Bolt (eight).

REMOVAL AND INSTALLATION
(Later Engines)

Drain the cooling system and remove the radiator when so equipped. See the covering topic.

Loosen the fan belt adjustment and remove the fan belts **(1)**.

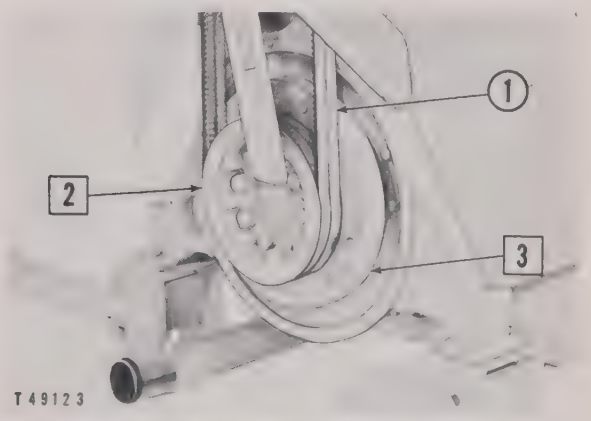

PREPARING TO REMOVE VIBRATION DAMPER

☐ **Remove**

1–Fan belt. 2–Crankshaft pulley. 3–Vibration damper.

Install in the reverse order of removal and adjust the fan belts. Tighten the bolts evenly and diametrically and to the specified torque to prevent distortion of the damper. See the topic, SPECIFICATIONS.

NOTE

The bolt holes in the crankshaft flange are unequally spaced to prevent the damper from being installed backwards, which would cause interference with the fan blades.

Front Support

The engine front support supports the weight of the engine and also serves as a cylinder block front cover. This is accomplished by bolting the support directly to the cylinder block and pan.

Oil sealing is accomplished by a slinger pressed in the front support, which mates with a piston ring type seal on a thrower on the crankshaft. See the topic, CRANKSHAFT.

Removal and Installation

1. Drain the cooling system and remove the radiator when so equipped. See the covering topic.
2. Remove the fan belts **(1)**, fan drive pulley **(4)**, and vibration damper **(3)**. See the covering topic.
3. Drain the oil and remove the side covers from the engine oil pan.
4. Remove the bolts which hold the pan to the front support **(2)**. Loosen the bolts holding the pan to the cylinder block and lower the pan about 1/4".
5. Separate the pan gasket from the block and front support.

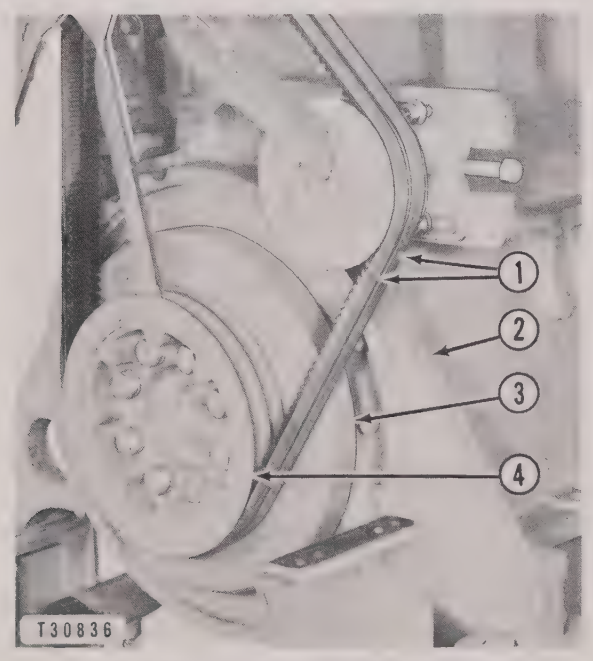

PREPARING TO REMOVE FRONT SUPPORT
1–Fan belts. 2–Engine front support. 3–Vibration damper. 4–Fan drive pulley.

6. Install a spacer **(6)** on each side of the engine between the cylinder block and oil pan.
7. Tighten the pan bolts on each side of the spacers. This will allow adequate room for removal of the front support without damaging the pan gasket.

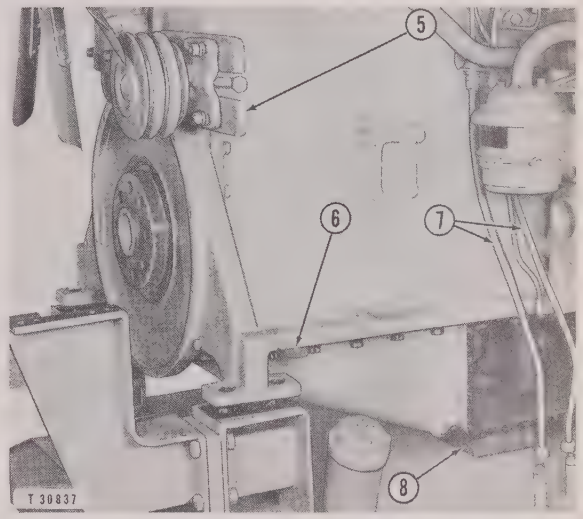

PREPARING TO REMOVE FRONT SUPPORT
5–Fan belt adjustment bracket. 6–Spacer. 7–Fuel lines. 8–Block.

8. Remove the bolts which hold the engine front support to the engine base, and loosen the bolts which hold the engine rear supports to the base, on models so equipped.

REMOVING FRONT SUPPORT
9–Piston ring type seal. 10–Oil slinger.

9. If the engine is equipped with a base fuel tank, disconnect the fuel lines **(7)**.

10. Remove the fan belt adjustment bracket **(5)**.

11. Raise the front of the engine and place a 2″ block **(8)** under the engine oil pan and lower the engine on the block.

12. Remove the bolts holding the engine front support to the cylinder block and remove the support.

CAUTION

The crankshaft extends through the engine front support and has a piston ring type oil seal **(9)** which mates with a slinger **(10)** which is pressed into the front support. When installing the front support, care must be taken so the piston ring type seal or slinger will not be damaged or broken.

13. Install the front support in reverse order of removal, replacing gaskets where necessary.

Front Support

The engine front support serves as a cylinder block front cover as well as supporting the weight of the front of the engine. This is accomplished by bolting the support directly to the cylinder block and pan.

Oil sealing is accomplished by a slinger pressed in the front support, which mates with a piston ring type seal on a thrower on the crankshaft. See the topic, CRANKSHAFT.

REMOVAL AND INSTALLATION

1. Drain the cooling system and remove the radiator if so equipped. See the covering topic.
2. Remove the vibration damper **(1)**. See the covering topic.
3. Drain the oil and remove the side covers from the engine oil pan.

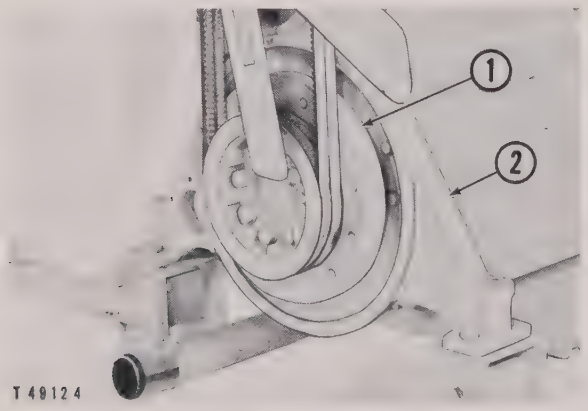

PREPARING TO REMOVE FRONT SUPPORT
1–Vibration damper. 2–Front support.

4. Remove the bolts which secure the oil pan to the front support **(2)**. Loosen the bolts holding the pan to the cylinder block and lower the pan about 1/4″.
5. Separate the pan gasket from the block and front support.
6. Install a spacer **(3)** on each side of the engine between the cylinder block and oil pan as illustrated.
7. By turning the pan bolts on either side of the spacers, remove the slack from the bolts. This will allow adequate clearance for removal of the front support without damaging the pan gasket.
8. Remove the bolts which secure the engine front support to the engine base **(4)** and loosen the bolts which hold the engine rear supports to the base, on models so equipped.

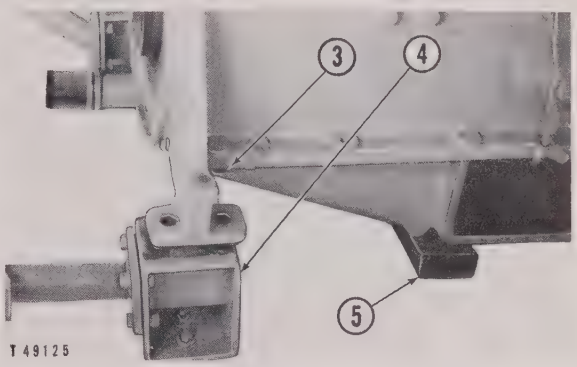

PREPARING TO REMOVE FRONT SUPPORT
3–Spacer. 4–Engine base. 5–Block.

9. If the engine is equipped with a base fuel tank, disconnect the fuel lines.
10. Raise the front of the engine and place a 2″ block **(5)** under the oil pan and lower the engine on the block.

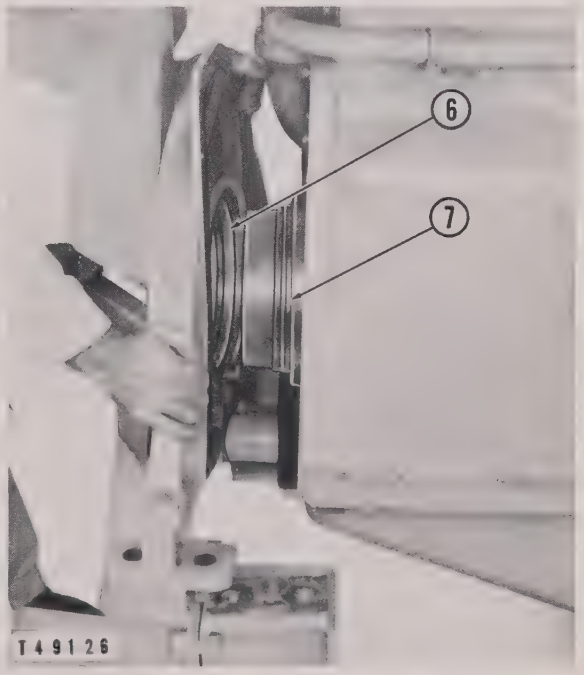

REMOVING FRONT SUPPORT
6–Slinger. 7–Piston ring type seal.

11. Remove the bolts holding the engine front support to the cylinder block and remove the support.

CAUTION

The crankshaft extends through the engine front support and has a piston ring type oil seal **(7)** which mates with a slinger **(6)** which is pressed into the front support. When installing the front support, care must be taken so the ring seal or oil slinger will not be damaged or broken.

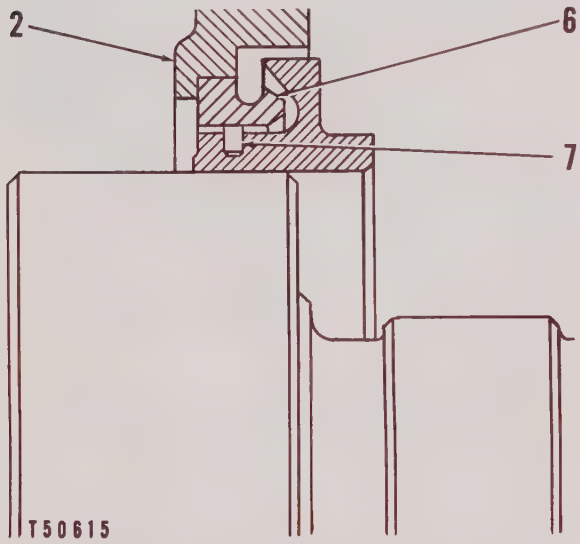

FRONT SUPPORT (CROSS SECTION)
2–Front support. 6–Slinger. 7–Piston ring-type seal.

12. Inspect all parts and gaskets for damage and replace if necessary. Install in reverse order of removal.

Timing Gears

The timing gears are located at the rear of the engine and are encased by the timing gear housing mounted on the rear face of the cylinder block, and by the front face of the flywheel housing. The timing gears drive the accessories and keep the rotation of the crankshaft, camshaft, and fuel injection pump camshaft in the correct relationship to each other. A gear integrally cut on the rear of the crankshaft drives the timing gears.

The crankshaft gear **(10)** meshes with the idler gear **(5)**, the water pump and generator idler gear **(8)** and the oil pump drive gear **(9)**. The integral spur gear **(7)** on the idler gear **(5)** meshes with the camshaft idler gear **(2)**, which in turn transmits power to the fuel pump and governor drive gear **(1)** and the camshaft gear **(3)**. The idler gear **(8)** drives the generator drive gear **(6)** and the water pump drive gear **(4)**.

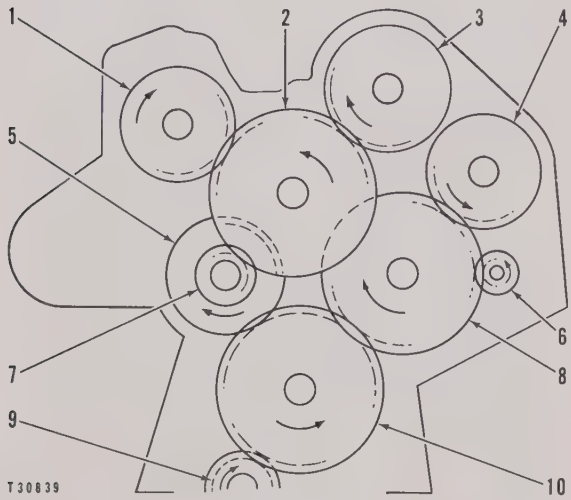

TIMING GEARS (SCHEMATIC)

1–Fuel pump and governor drive gear. 2–Camshaft idler gear. 3–Camshaft gear. 4–Water pump drive gear. 5–Idler gear. 6–Generator drive gear. 7–Integral spur gear. 8–Idler gear. 9–Oil pump drive gear. 10–Crankshaft gear.

IDLER GEARS

The three idler gears in the timing gear housing are the camshaft idler gear **(10)**, the idler cluster gear **(9)** and the idler gear **(8)**.

The idler cluster gear **(9)** is shrunk on the shaft **(2)**. The shaft and gear must be removed as a unit. It is supported in the timing gear housing with bolts by means of a collar **(4)** and thrust washer **(5)**. The thrust washer absorbs the end thrust. The bearing cage **(1)** has two bearings **(3)** pressed in the bore. If new bearings are installed, they must not extend beyond the ends of the bearing cage. This idler gear is driven by the crankshaft gear and drives the camshaft idler gear.

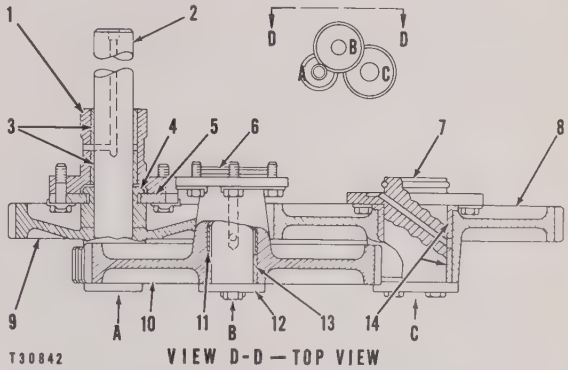

IDLER GEARS (CROSS SECTION)

1–Bearing cage. 2–Stub shaft. 3–Bearings. 4–Collar. 5–Thrust washer. 6–Stub shaft. 7–Stub shaft. 8–Idler gear (generator and water pump). 9–Idler cluster gear. 10–Camshaft idler gear. 11–Spacer. 12–Washer. 13–Bearings. 14–Bearings.

The camshaft idler gear **(10)** is mounted on a stub shaft **(6)** supported in the timing gear housing with bolts. This shaft can be removed by bending the locks and removing the bolts. The camshaft idler gear has two bearings **(13)** pressed in the bore with a spacer **(11)** between them. If new bearings are installed, they must not extend beyond the end of the hub to prevent interference between the bearing, the washer **(12)** and the flange on the shaft. The camshaft idler gear drives the fuel pump and governor drive shaft, and the camshaft gear.

The idler gear **(8)** uses thrust bearings **(14)** to absorb the end thrust. The idler gear is mounted on a stub shaft **(7)** which is supported in the timing gear housing with studs and nuts. The shaft can be removed by removing the gear, bending the locks, removing the stud nuts, and sliding the shaft off the studs. This idler gear drives the generator drive gear and the water pump gear.

Note the oil passages in the three shafts.

Removal and Installation

1. Remove the flywheel housing as described in the covering topic.
2. Remove the camshaft idler gear **(2)** by straightening the locks, removing the bolts and washer, and sliding the gear from the shaft.

NOTE

If the crankshaft has not been removed, the oil thrower will have to be removed to permit removal of the other two idlers. See the covering topic.

3. Remove the idler gear **(3)** in the same manner as the camshaft idler gear.
4. Remove the idler gear **(1)** by straightening the locks and removing the bolts and locks. The idler gear and shaft are removed as a unit.
5. Check the bearings in the camshaft idler gear, the idler gear **(1)** bearing cage, and the thrust bearings in the idler gear **(3)** for wear. For permissible clearance, refer to the topic, SPECIFICATIONS.
6. Install in reverse order of removal, using new locks. See the topic, TIMING GEARS AND TIMING MARKS.

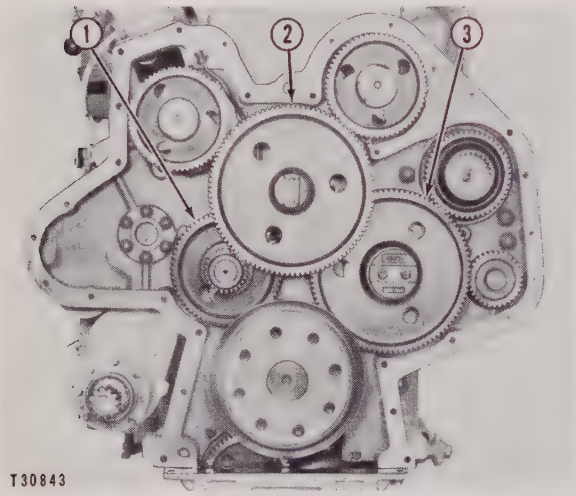

IDLER GEAR REMOVAL AND INSTALLATION
1–Idler gear. 2–Camshaft idler gear. 3–Idler gear.

7. After installation, check the gear backlash. For permissible backlash, see the topic, SPECIFICATIONS.

TIMING GEARS AND TIMING MARKS

To insure proper engine performance, time the gears in the following manner:

1. Remove the flywheel housing. See the covering topic.
2. Remove the camshaft idler gear **(2)**. See the topic, REMOVAL AND INSTALLATION.
3. Align the F-mark **(1)** on the idler gear with the F-mark **(4)** on the crankshaft gear.
4. Time the camshaft by inserting a $^3/_8$" - 16 (NC) bolt of sufficient length between the two teeth of the camshaft gear at the V-mark **(7)** and into the tapped hole in the timing gear housing. This locks the camshaft in the exact position for the No. 1 piston at top center compression stroke.

NOTE

With the oil thrower in place, it may be difficult to see the F-marks. For this reason scribe marks **(3)** and **(5)** are provided on the idler gear which line up with the contour of the oil thrower. With the No. 1 piston at top dead center, this provides an accurate aid for proper timing. In addition, a ground relief on the side of the idler gear and a dash on the chamfer of the crankshaft gear provides a means to actually observe that the F-marks are properly aligned with the thrower installed. When the crankshaft gear and idler gear are properly timed, the F-marks on these gears will be in alignment every fifth revolution of the crankshaft.

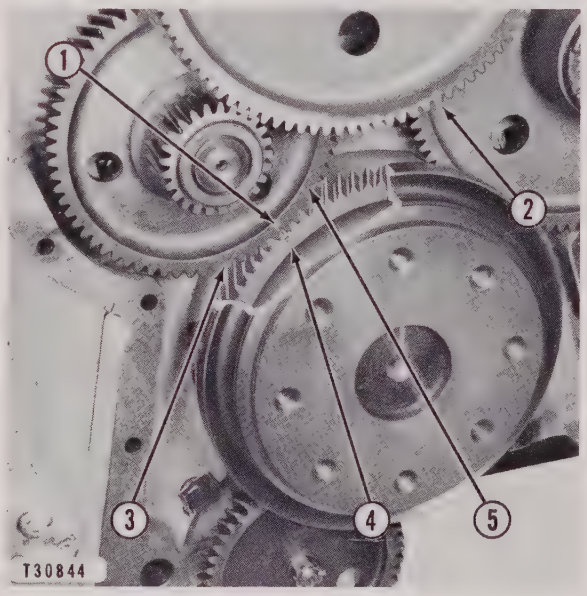

TIMING MARKS
1–F-mark. 2–Camshaft idler gear. 3–Scribe mark. 4–F-mark. 5–Scribe mark.

NOTE

The fuel pump and governor drive gear and the camshaft gear are identical. Disregard the V-mark on the fuel pump and governor drive gear.

5. Time the fuel pump and governor drive gear. See the covering topic, TIMING THE FUEL INJECTION PUMP CAMSHAFT.

NOTE

There are no timing marks on the camshaft idler gear since the fuel pump and governor drive gear and the camshaft gear are timed independently to established fixed points.

6. After the crankshaft, fuel pump and governor

drive gear, and the camshaft gear have been correctly positioned, the camshaft idler gear **(6)** will slide into mesh with the mating gears.

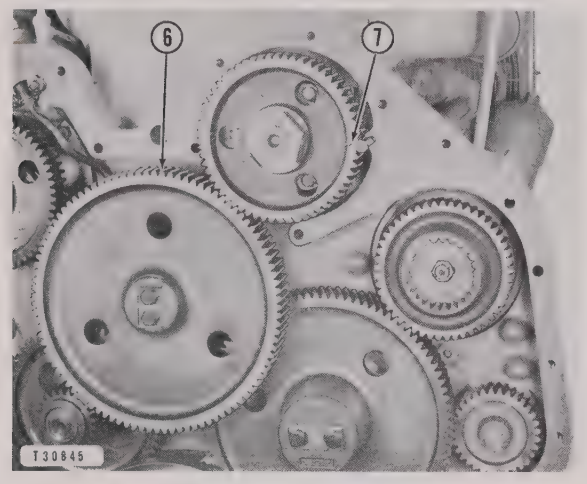

TIMING MARKS
6–Camshaft idler gear. 7–V-mark.

CAMSHAFT

The camshaft is located on the upper right hand side of the cylinder block and is driven by the camshaft gear. The camshaft is supported in the block by seven bearings. The camshaft is positioned by a thrust washer secured to the inside face of the timing gear housing. The cams which actuate the inlet

PREPARING TO REMOVE CAMSHAFT
1–Cover.

and exhaust valves are forged integrally with the shaft. The camshaft and camshaft gear may be removed as a unit. The camshaft and/or camshaft gear can be removed without disassembling the flywheel housing, by removing the cover **(1)**.

Camshaft Gear Removal and Installation

1. Bend the lock and remove the retaining nut and lock.
2. Using a 8H700 Puller Assembly and the 8F7560 Step Plate as illustrated, remove the gear.

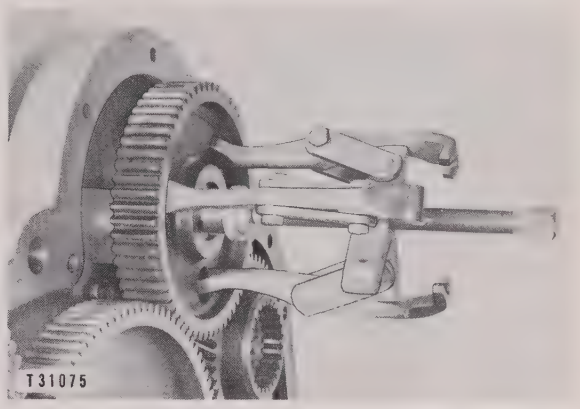

CAMSHAFT GEAR REMOVAL
(Flywheel Housing Removed)

3. Heat the gear, preferably in oil. Align the keyway on the gear with the key on the camshaft and install the gear, making sure the timing V-mark is visible.
4. If no suitable means of heating the gear is available, an 8F3671 Installation Group and a 6H6988 Sleeve can be used to press the gear onto the shaft.
5. Install the lock and retaining nut. Tighten the nut to a torque of 300 lb. ft. and bend the lock.
6. Check the timing of the camshaft as described in the topic, TIMING GEARS AND TIMING MARKS.
7. Check the gear backlash. See the topic, SPECIFICATIONS.

Camshaft Removal and Installation

1. Remove the cylinder heads as described in the covering topic.

NOTE

The camshaft **(4)** and camshaft gear can be removed as a unit after removing the cylinder head by removing the bolts securing the thrust washer to the timing gear housing through the three holes in the camshaft gear.

2. Remove the camshaft gear **(1)** as described in the covering topic.

3. Remove the bolts securing the thrust washer **(2)** to the timing gear housing.

4. Remove the thrust washer **(2)** and the washer **(3)**.

5. The camshaft **(4)** can now be removed from the cylinder block. If the camshaft is removed for an extended period of time, place it where it will not be damaged.

6. Check the bearing clearance. For the permissible bearing clearance, see the topic, SPECIFICATIONS.

NOTE

If the bearings have to be replaced, press them out of the cylinder block. When installing bearings, make certain the oil holes are properly aligned and then press into place.

7. Install the camshaft into the cylinder block.

8. Install the washer **(3)** and the thrust washer **(2)**.

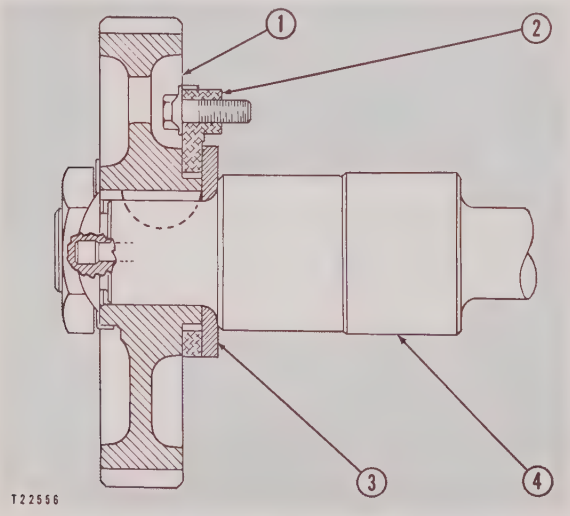

CAMSHAFT AND CAMSHAFT GEAR (CROSS SECTION)
1–Camshaft gear. 2–Thrust washer. 3–Washer. 4–Camshaft.

9. Install the gear as described in the covering topic.

10. Check the camshaft end clearance as described in the topic, CAMSHAFT END CLEARANCE.

11. Check the gear backlash. For the permissible gear backlash, see the topic, SPECIFICATIONS.

Camshaft End Clearance

The camshaft end clearance is determined by the difference between the depth of the machined portion of the gear hub and the thickness of the thrust washer. For the end clearance, see the topic, SPECIFICATIONS.

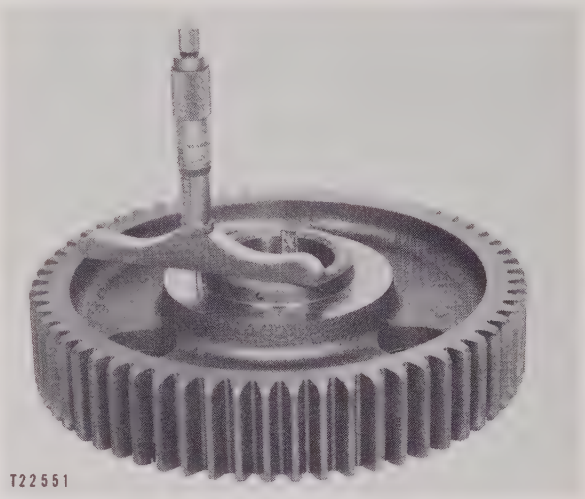

CHECKING END CLEARANCE

If the camshaft gear and thrust washer have been removed, the depth of the hub can be measured with a depth micrometer.

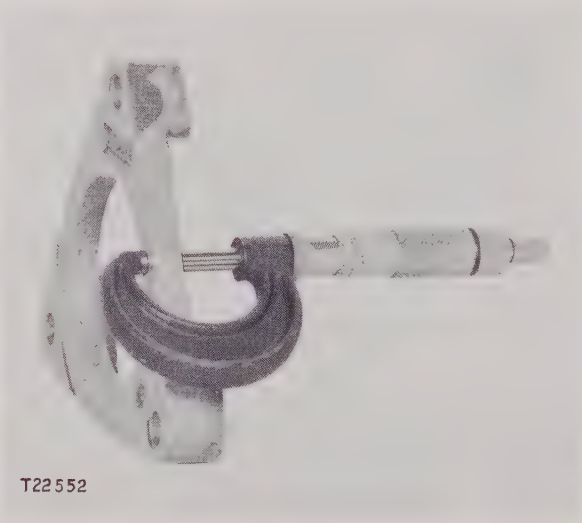

CHECKING END CLEARANCE

The thickness of the thrust washer can be measured with 0″ to 1″ micrometer. The difference between the measurements will be the end clearance.

With the camshaft gear and thrust washer in place, mount a dial indicator on the timing gear housing as illustrated. Check the end clearance by moving the camshaft backward and forward.

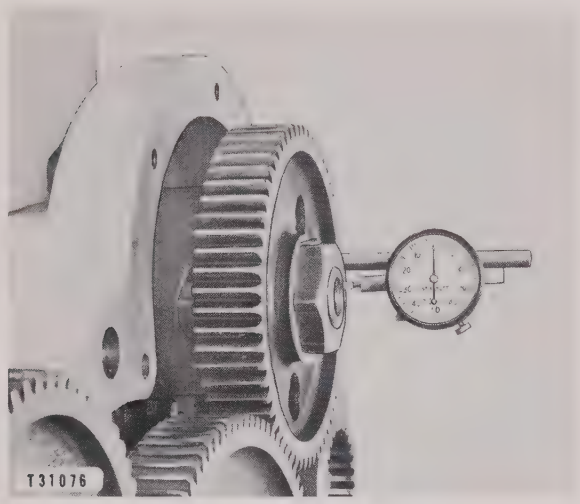

CHECKING END CLEARANCE

TIMING GEAR HOUSING

Removal and Installation

1. Remove the flywheel housing. See the covering topic.
2. Remove the crankshaft, generator and water pump. See the covering topics.

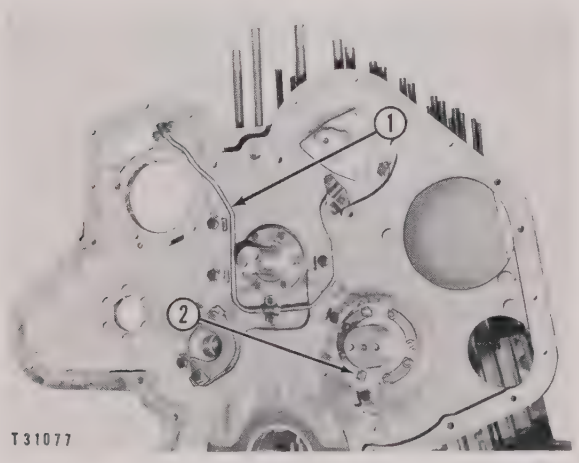

PREPARING TO REMOVE TIMING GEAR HOUSING
1–Oil line. 2–Stud nut.

3. Remove the following gears: the idler gears, the fuel pump and governor drive gear and the camshaft gear. See the covering topics. Remove the water pump drive gear and generator drive gear if so desired.
4. Bend the locks and remove the bolts and locks securing the oil line **(1)** to the timing gear housing. Remove the oil line.
5. Bend the locks and remove the stud nuts **(2)** securing the stub shaft to the timing gear housing and the cylinder block.
6. Separate the oil pan gasket from the timing gear housing.
7. Attach a suitable hoist to the timing gear housing, bend the locks and remove the bolts securing the timing gear housing to the rear face of the cylinder block.
8. Pry the housing away from the cylinder block and remove the housing.
9. Install in the reverse order of removal using new locks and gaskets. The housing can be properly aligned by the dowel pins.

Timing Gears
(Natural Gas Engines)

The timing gears are located at the rear of the engine and are encased by the timing gear housing mounted on the rear face of the cylinder block, and by the front face of the flywheel housing. The timing gears drive the accessories and keep the rotation of the crankshaft, camshaft, and magneto drive in the correct relationship to each other. A gear integrally cut on the rear of the crankshaft drives the timing gears.

The crankshaft gear **(10)** meshes with the idler gear **(5)**, the water pump and generator idler gear **(8)** and the oil pump drive gear **(9)**. The integral spur gear **(7)** on the idler gear **(5)** meshes with the camshaft idler gear **(2)**, which in turn transmits power to the magneto and governor drive gear **(1)** and the camshaft gear **(3)**. The idler gear **(8)** drives the generator drive gear **(6)** and the water pump drive gear **(4)**.

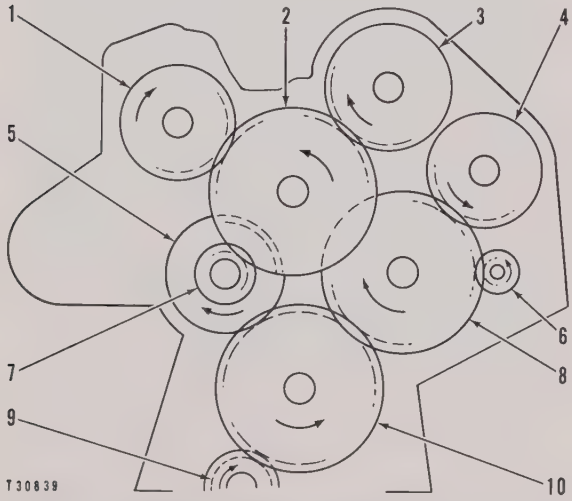

TIMING GEARS (SCHEMATIC)

1–Magneto and governor drive gear. 2–Camshaft idler gear. 3–Camshaft gear. 4–Water pump drive gear. 5–Idler gear. 6–Generator drive gear. 7–Integral spur gear. 8–Idler gear. 9–Oil pump drive gear. 10–Crankshaft gear.

IDLER GEARS

The three idler gears in the timing gear housing are the camshaft idler gear **(10)**, the idler cluster gear **(9)** and the idler gear **(8)**.

The idler cluster gear **(9)** is shrunk on the shaft **(2)**. The shaft and gear must be removed as a unit. It is supported in the timing gear housing with bolts by means of a collar **(4)** and thrust washer **(5)**. The thrust washer absorbs the end thrust. The bearing cage **(1)** has two bearings **(3)** pressed in the bore. If new bearings are installed, they must not extend beyond the ends of the bearing cage. This idler gear is driven by the crankshaft gear and drives the camshaft idler gear.

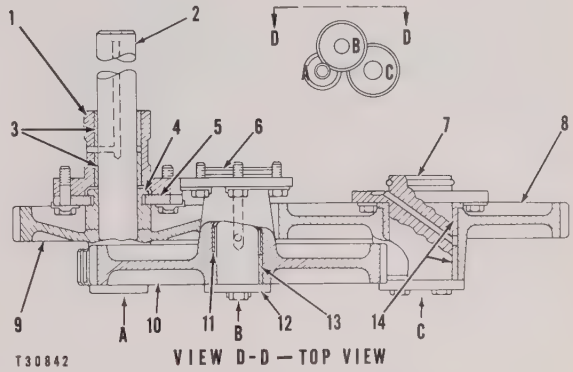

IDLER GEARS (CROSS SECTION)

1–Bearing cage. 2–Stub shaft. 3–Bearings. 4–Collar. 5–Thrust washer. 6–Stub shaft. 7–Stub shaft. 8–Idler gear (generator and water pump). 9–Idler cluster gear. 10–Camshaft idler gear. 11–Spacer. 12–Washer. 13–Bearings. 14–Bearings.

The camshaft idler gear **(10)** is mounted on a stub shaft **(6)** supported in the timing gear housing with bolts. This shaft can be removed by bending the locks and removing the bolts. The camshaft idler gear has two bearings **(13)** pressed in the bore with a spacer **(11)** between them. If new bearings are installed, they must not extend beyond the end of the hub to prevent interference between the bearing, the washer **(12)** and the flange on the shaft. The camshaft idler gear drives the magneto and governor drive shaft, and the camshaft gear.

The idler gear **(8)** uses thrust bearings **(14)** to absorb the end thrust. The idler gear is mounted on a stub shaft **(7)** which is supported in the timing gear housing with studs and nuts. The shaft can be removed by removing the gear, bending the locks, removing the stud nuts, and sliding the shaft off the studs. This idler gear drives the generator drive gear and the water pump gear.

Note the oil passages in the three shafts.

Removal and Installation

1. Remove the flywheel housing as described in the covering topic.
2. Remove the camshaft idler gear **(2)** by straightening the locks, removing the bolts and washer, and sliding the gear from the shaft.
3. Remove the thrower **(4)**. See the topic, CRANKSHAFT OIL THROWER, for correct removal and installation procedure.
4. Remove the idler gear **(3)** in the same manner as the camshaft idler gear.

5. Remove the idler gear **(1)** by straightening the locks and removing the bolts and locks. The idler gear and shaft are removed as a unit.

6. Check the bearings in the camshaft idler gear, the idler gear **(1)** bearing cage, and the thrust bearings in the idler gear **(3)** for wear. For permissible clearance, refer to the topic, SPECIFICATIONS.

7. Install in reverse order of removal, using new locks. See the topic, TIMING GEARS AND TIMING MARKS.

8. After installation, check the gear backlash. For permissible backlash, see the topic, SPECIFICATIONS.

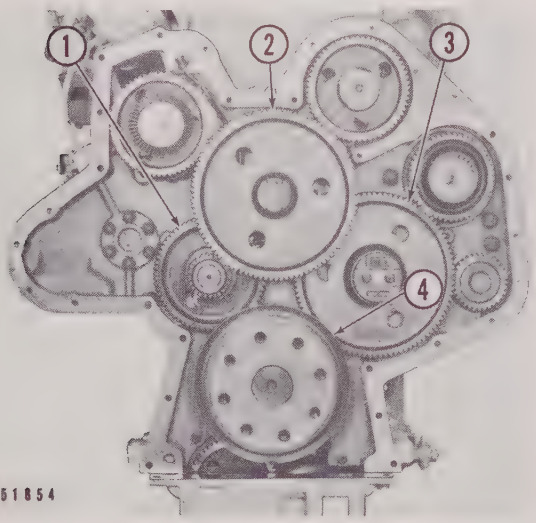

IDLER GEAR REMOVAL AND INSTALLATION
1–Idler gear. 2–Camshaft idler gear. 3–Idler gear. 4–Thrower.

TIMING GEARS AND TIMING MARKS

To insure proper engine performance, time the gears in the following manner:

1. Remove the flywheel housing. See the covering topic.

2. Remove the camshaft idler gear **(2)**. See the topic, REMOVAL AND INSTALLATION.

3. Align the F-mark **(1)** on the idler gear with the F-mark **(4)** on the crankshaft gear.

4. Time the camshaft by inserting a 3/8" - 16 (NC) bolt of sufficient length between the two teeth of the camshaft gear at the V-mark **(7)** and into the tapped hole in the timing gear housing. This locks the camshaft in the exact position for the No. 1 piston at top center compression stroke.

NOTE

With the oil thrower in place, it may be difficult to see the F-marks. For this reason scribe marks **(3)** and **(5)** are provided on the idler gear which line up with the contour of the oil thrower. With the No. 1 piston at top dead center, this provides an accurate aid for proper timing. In addition, a ground relief on the side of the idler gear and a dash on the chamfer of the crankshaft gear provides a means to actually observe that the F-marks are properly aligned with the thrower installed. When the crankshaft gear and idler gear are properly timed, the F-marks on these gears will be in alignment every fifth revolution of the crankshaft.

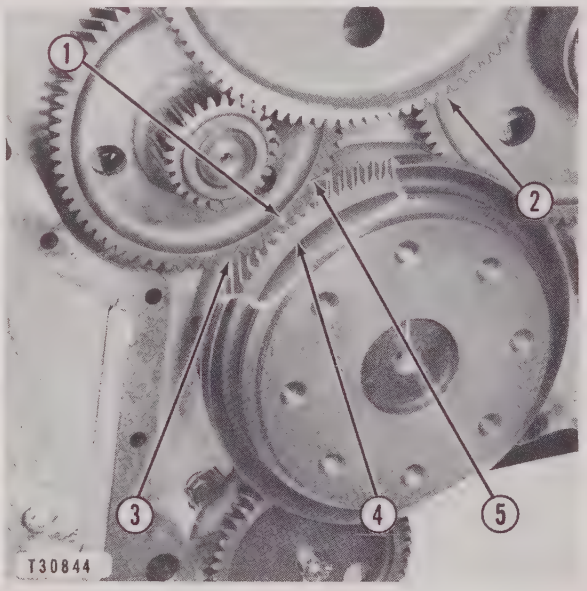

TIMING MARKS
1–F-mark. 2–Camshaft idler gear. 3–Scribe mark. 4–F-mark. 5–Scribe mark.

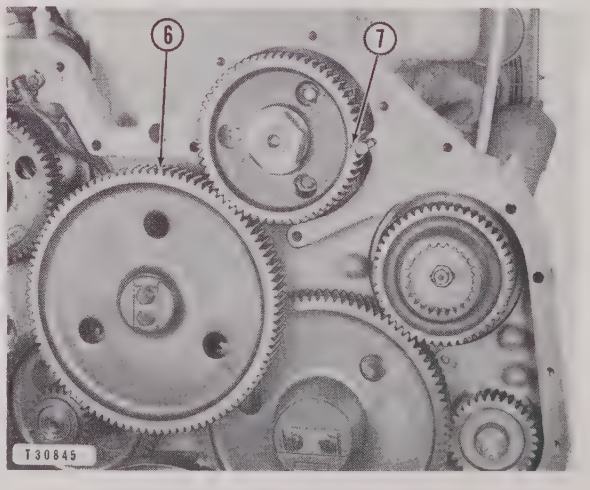

TIMING MARKS
6–Camshaft idler gear. 7–V-mark.

NOTE

There are no timing marks on the camshaft idler gear since the magneto and governor drive gear and the camshaft gear are timed independently to established fixed points.

5. After the crankshaft, magneto and governor drive gear, and the camshaft gear have been correctly positioned, the camshaft idler gear **(6)** will slide into mesh with the mating gears.

CAMSHAFT

The camshaft is located on the upper right hand side of the cylinder block and is driven by the camshaft gear. The camshaft is supported in the block by seven bearings. The camshaft is positioned by a thrust washer secured to the inside face of the timing gear housing. The cams which actuate the inlet

PREPARING TO REMOVE CAMSHAFT
1–Cover.

and exhaust valves are forged integrally with the shaft. The camshaft and camshaft gear may be removed as a unit. The camshaft and/or camshaft gear can be removed without disassembling the flywheel housing, by removing the cover **(1)**.

Camshaft Gear Removal and Installation

1. Bend the lock and remove the retaining nut and lock.
2. Using a 8H700 Puller Assembly and the 8B7560 Step Plate as illustrated, remove the gear.
3. Heat the gear in oil to a temperature not to exceed 600° F. Align the keyway on the gear with the key on the camshaft and install the gear, making sure the timing V-mark is visible.

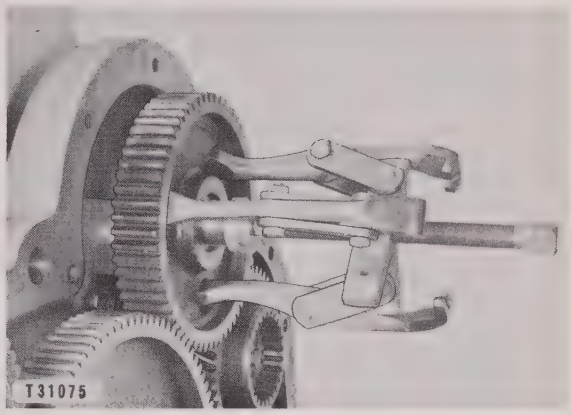

CAMSHAFT GEAR REMOVAL
(Flywheel Housing Removed)

4. If no suitable means of heating the gear is available, an 8F3671 Installation Group and a 6H6988 Sleeve can be used to press the gear onto the shaft.
5. Install the lock and retaining nut. Tighten the nut to the torque listed in the topic, SPECIFICATIONS.
6. Check the timing of the camshaft as described in the topic, TIMING GEARS AND TIMING MARKS.
7. Check the gear backlash. See the topic, SPECIFICATIONS.

Camshaft Removal and Installation

1. Remove the cylinder heads as described in the covering topic.

NOTE

The camshaft **(4)** and camshaft gear can be removed as a unit after removing the cylinder head by removing the bolts securing the thrust washer to the timing gear housing through the three holes in the camshaft gear.

2. Remove the camshaft gear **(1)** as described in the covering topic.
3. Remove the bolts securing the thrust washer **(2)** to the timing gear housing.
4. Remove the thrust washer **(2)** and the washer **(3)**.
5. The camshaft **(4)** can now be removed from the cylinder block. If the camshaft is removed for an extended period of time, place it where it will not be damaged

6. Check the bearing clearance. For the permissible bearing clearance, see the topic, SPECIFICATIONS.

NOTE

If the bearings have to be replaced, press them out of the cylinder block. When installing bearings, make certain the oil holes are properly aligned and then press into place.

7. Install the camshaft into the cylinder block.
8. Install the washer **(3)** and the thrust washer **(2)**.

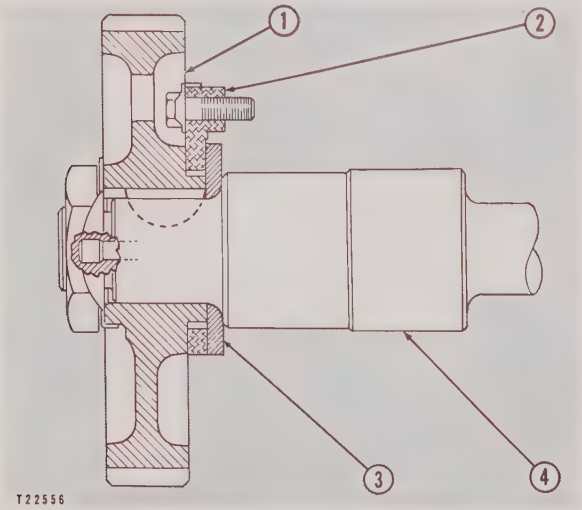

CAMSHAFT AND CAMSHAFT GEAR (CROSS SECTION)
1–Camshaft gear. 2–Thrust washer. 3–Washer. 4–Camshaft.

NOTE

Be sure to install the washer **(3)** with the chamfered edge inward as shown.

9. Install the gear as described in the covering topic.
10. Check the camshaft end clearance as described in the topic, CAMSHAFT END CLEARANCE.
11. Check the gear backlash. For the permissible gear backlash, see the topic, SPECIFICATIONS.

Camshaft End Clearance

The camshaft end clearance is determined by the difference between the depth of the machined portion of the gear hub and the thickness of the thrust washer. For the end clearance, see the topic, SPECIFICATIONS.

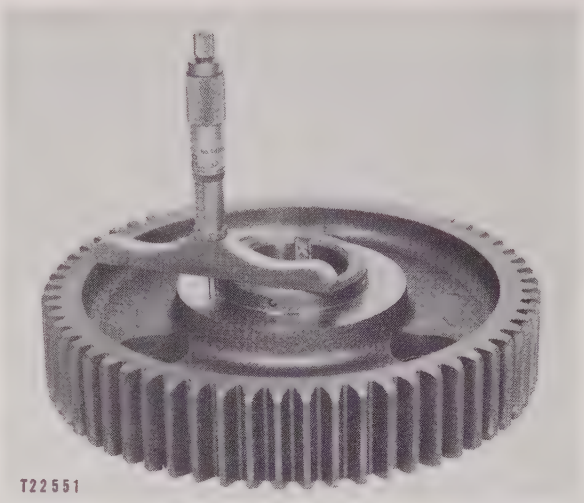

CHECKING END CLEARANCE

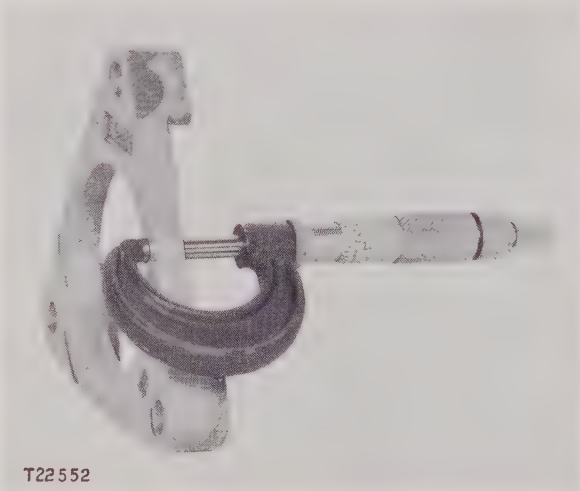

CHECKING END CLEARANCE

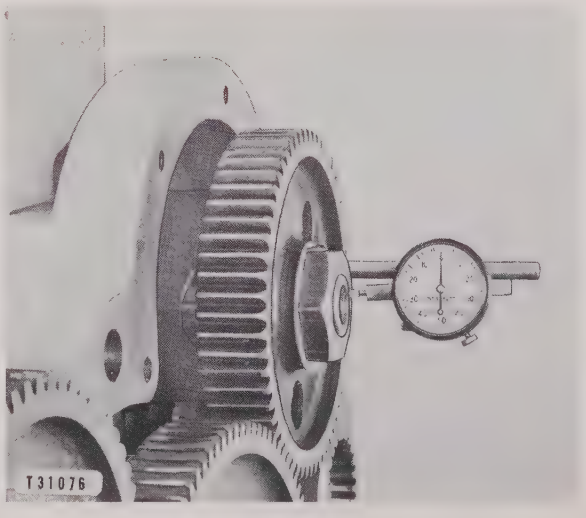

CHECKING END CLEARANCE

If the camshaft gear and thrust washer have been removed, the depth of the hub can be measured with a depth micrometer.

The thickness of the thrust washer can be measured with 0" to 1" micrometer. The difference between the measurements will be the end clearance.

With the camshaft gear and thrust washer in place, mount a dial indicator on the timing gear housing as illustrated. Check the end clearance by moving the camshaft backward and forward.

TIMING GEAR HOUSING

Removal and Installation

1. Remove the flywheel housing. See the covering topic.
2. Remove the crankshaft, generator and water pump. See the covering topics.

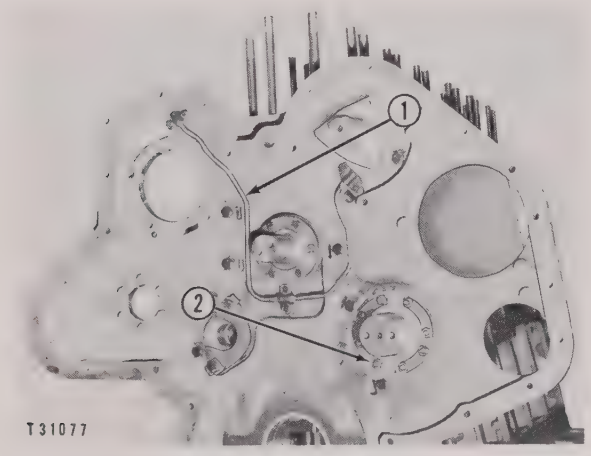

PREPARING TO REMOVE TIMING GEAR HOUSING
1–Oil line. 2–Stud nut.

3. Remove the following gears: the idler gears, the magneto and governor drive gear and the camshaft gear. See the covering topics. Remove the water pump drive gear and generator drive gear if so desired.
4. Bend the locks and remove the bolts and locks securing the oil line **(1)** to the timing gear housing. Remove the oil line.
5. Bend the locks and remove the stud nuts **(2)** securing the stub shaft to the timing gear housing and the cylinder block. Remove the shaft.
6. Separate the oil pan gasket from the timing gear housing.
7. Attach a suitable hoist to the timing gear housing, bend the locks and remove the bolts securing the timing gear housing to the rear face of the cylinder block.
8. Pry the housing away from the cylinder block and remove the housing.
9. Install in the reverse order of removal using new locks and gaskets. The housing can be properly aligned by the dowel pins.
10. See the topic, SPECIFICATIONS, for timing gear housing bolt torque.

Pistons, Rings and Connecting Rods

PISTONS AND RINGS

The aluminum alloy piston has four rings, consisting of three compression rings and one oil ring. All rings are located above the piston pin bore. The top compression ring seats in an integral cast iron band and the single oil ring is spring-loaded. The two intermediate compression rings have a taper face to provide quick break-in. Holes **(2)** in the groove for the oil ring provide for the return of oil to the crankcase.

The full floating piston pin **(4)** is retained by two snap rings **(3)** which fit in grooves in the pin bore.

The stainless steel plug **(1)** in the crater of the piston prolongs piston life by providing a more heat resistant surface at the point of highest combustion temperature.

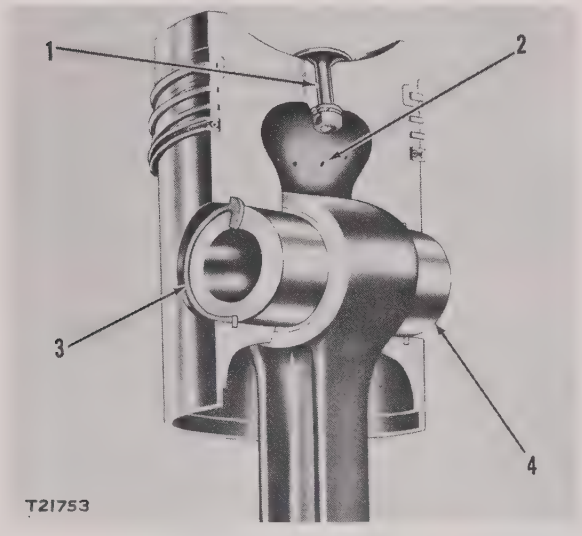

PISTONS AND RINGS
1–Heat plug. 2–Oil return hole. 3–Snap ring. 4–Piston pin.

PISTON AND RING LUBRICATION

The pistons, the rings, and the cylinder liners are lubricated by the oil that is splashed or thrown by the crankshaft while the engine is in operation.

Oil return holes in the piston oil ring groove provide for the return of oil to the crankcase.

The pistons are cooled and the piston pins are lubricated by spray tubes positioned in the cylinder block under each cylinder liner. A drilled passage connects the spray tubes directly to the oil manifold. The spray tubes are held by nuts which are

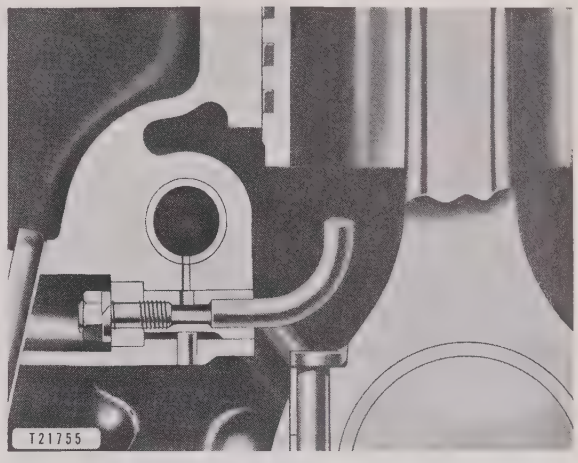

POSITION OF SPRAY TUBE

accessible under the inspection covers on the right side of the engine cylinder block.

PISTONS

Removal and Installation

1. Drain the lubricating oil and the engine coolant.
2. Remove the cylinder heads as described in the topic, CYLINDER HEAD REMOVAL.
3. Remove the carbon from the inside top surface of the cylinder liner.
4. Remove the cylinder block inspection covers or the oil pan and remove the connecting rod bearing caps as described in the topic, CONNECTING ROD BEARING REMOVAL.
5. Rotate the crankshaft until the piston to be removed is at top dead center. Carefully push the connecting rod upward until the piston rings are out of the cylinder.
6. Lift out the piston and connecting rod assembly.
7. Before installing the piston, be sure the liners and pistons are clean and free of carbon.
8. Place the 6H4140 Piston Ring Compressor Tool over the cylinder into which the piston is to be installed.
9. Oil the piston and rings and place the piston and connecting rod assembly into the cylinder liner until the ring rests on the compressor tool. Position the V-mark on top of the piston in alignment with the V-mark on top of the cylinder block. This will place the recess for the

valves and the heat plug in the piston in the correct relationship to the valves and precombustion chamber in the cylinder head. Push the piston through the compressor and into the cylinder liner.

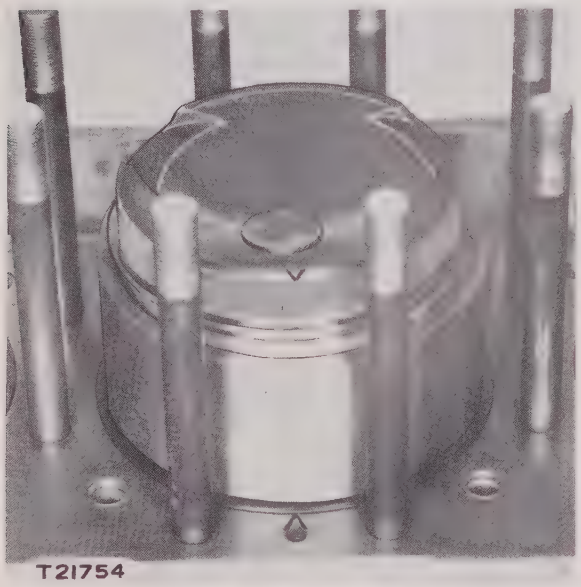

PISTON INSTALLATION

Cleaning and Inspecting Piston

Pistons which are not worn excessively or scored badly should be cleaned and used again. The ring grooves should be square and smooth. The side clearance between a new ring and the top ring groove should not exceed .012".

There are a number of good carbon solvents available for cleaning pistons. A carbon softener for use on diesel engine pistons is fresh, cold water. Soak pistons in cold water overnight, let them dry (preferably in sunlight) and most of the carbon including that in the ring lands can be easily rubbed off.

The use of broken rings or carbon scrapers on ring lands should be avoided, as lands can be cut. A stick of hard wood does a good job and will not scratch the piston.

The bottom of each ring groove must be clean and the oil return holes in the oil ring grooves must be open before the installation of new rings.

The area above the top ring can be filed smooth, but pistons badly scored below the top ring groove should be replaced.

RINGS

Piston rings seal compression and control the amount of oil on the cylinder walls. If oil consumption is not excessive and compression is satisfactory, pistons should not be removed nor new rings installed when an engine is dismantled for some other reason.

To avoid damage to the piston, remove the rings with a 5H9621 Ring Expander.

RING EXPANDER

The rings should be placed on the piston in the proper groove. Use the 5H9621 Piston Ring Expander when placing the rings in the grooves. The ring expander is not only a time saver but will also prevent breaking or distorting rings and damaging ring grooves.

CAUTION

The two intermediate compression rings have a 2° taper face and have the TOP marked. Be sure to install these rings correctly.

The gap of a new ring in a new liner is .025"-.034" for the top ring, .017"-.030" for each of the other rings.

When new piston rings are to be used in worn cylinder liners, the ridge at the top of the liner should be raised.

Whenever new rings, piston assemblies or piston and liner groups are installed, be sure to run-in the engine on a conditioning schedule before operating at normal load and speed. Do not run the engine idle for a long period after installing new rings or liners. Rings will not seat during idle operation. See the topic, RUNNING-IN SCHEDULE.

RUNNING-IN SCHEDULE

For the correct running-in procedures, follow the information that accompanies piston rings, piston assemblies and piston and liner groups sent from the Caterpillar Parts Department.

CONNECTING RODS

Connecting rod bearings are located in the crankshaft end of the connecting rod. The bearing caps and rods are numbered consecutively, 1 up, from the front of the engine on the right side so that the numbers can be seen through the inspection openings on the right side of the cylinder block. The rods should be reassembled with the numbers in this position.

CONNECTING ROD AND PISTON PIN

See the topic, PISTONS, for information on connecting rod and piston removal.

Connecting Rod Bearing Removal

Connecting rod bearings are the precision type and are to be installed without fitting or scraping. The bearing halves can be removed, inspected and replaced through the inspection openings without removing the rod from the engine.

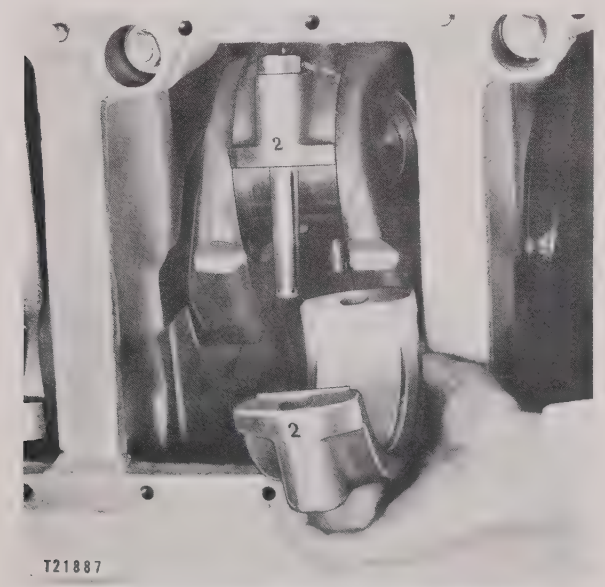

REMOVING CONNECTING ROD BEARING CAP

1. To remove a connecting rod bearing through the inspection opening, remove the cover and turn the crankshaft until the bearing to be removed is in the position shown in the illustration.
2. Remove the cotter pins and nuts from the connecting rod bolts and take out the cap and lower half.
3. To remove the upper half, turn the crankshaft or push the rod up slightly.

Connecting Rod Bearing Inspection

Connecting rod bearings are steel-backed, aluminum-lined. Larger particles of dirt and abrasives in the oil do not tend to embed in aluminum bearings. Such particles roll around between the bearing and crankshaft journal causing scratches in the aluminum bearing without actually becoming embedded in the aluminum. Such scratches are not necessarily harmful and do not indicate that the bearings should be replaced.

Bearings having over .016″ clearance should be replaced. If there is any question about the surface of a bearing, wash it with cleaning solvent to remove oil. If the surface feels rough and abrasive, install a new bearing. Another indication of dirt in the bearing is excessive crankshaft wear.

New standard connecting rod bearings are 4.1336″-4.1340″ on the inside diameter, giving a clearance of .0053″-.0078″ between the bearing and crankshaft. Bearings .025″ and .050″ undersize are serviced for reground crankshafts.

Bent rods should be discarded. Do not attempt to align connecting rods by bending them.

Connecting Rod Bearing Installation

When replacing the bearings, see that the protruding tab on the back of each bearing half lines up with its corresponding recess in the connecting rod and bearing cap. This locks the bearing in place and keeps it from rotating.

Tighten the nuts to the torque value listed in the specifications. It is permissible to exceed this value by the amount necessary to turn the nut to the next slot for alignment with the cotter pin hole.

Piston Pin Bushing

It is not always necessary to replace piston pin bushings at each engine reconditioning. They may last many thousands of hours if the oil has been kept clean.

After the oil has been cleaned from the pin and bushing, it is possible to feel the clearance between them. This normal oil clearance must not be mistaken for wear.

A new bushing, a pin or both, should be installed only when the clearance between the bushing and pin exceeds .006".

New connecting rods have the piston pin bushing bored in a special machine which maintains the proper center-to-center distance and parallelism of the connecting rod bearing and piston pin bore. Reconditioned rods should be machined in the same manner. A new connecting rod makes a good templet for center-to-center distance, which is 15.001" to 14.999".

After pressing a new bushing into place, it should be machined accurately to 2.3910" to 2.3915", inside diameter. A 2H6782 Rod Boring Machine is available for this.

Pistons, Rings and Connecting Rods

PISTONS AND RINGS

The aluminum alloy piston has three rings, consisting of two compression rings and one oil ring. All rings are located above the piston pin bore. The two compression rings seat in an integral cast iron band and the single oil ring is spring-loaded. Holes **(2)** in the groove for the oil ring provide for the return of oil to the crankcase.

The full floating piston pin **(4)** is retained by two snap rings **(3)** which fit in grooves in the pin bore.

The stainless steel plug **(1)** in the crater of the piston prolongs piston life by providing a more heat resistant surface at the point of highest combustion temperature.

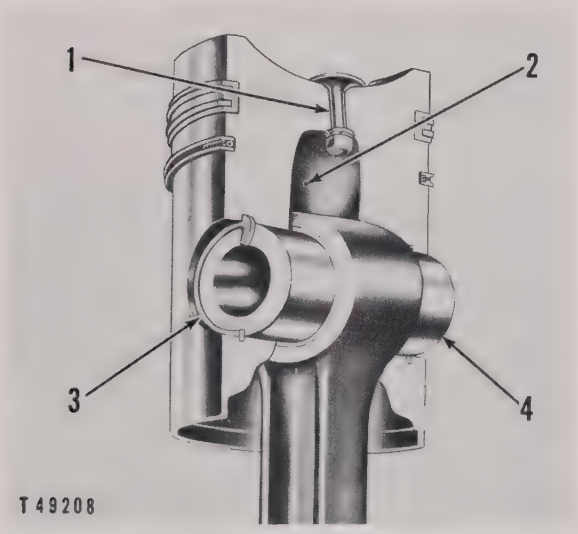

PISTONS AND RINGS
1–Heat plug. 2–Oil return hole. 3–Snap ring. 4–Piston pin.

PISTON AND RING LUBRICATION

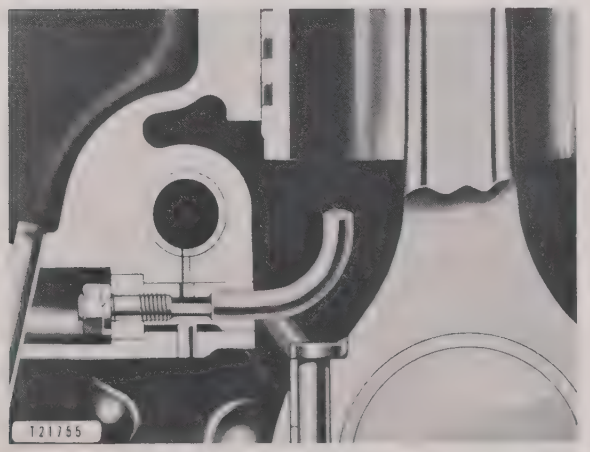

POSITION OF SPRAY TUBE

The pistons, the rings, and the cylinder liners are lubricated by the oil that is splashed or thrown by the crankshaft while the engine is in operation.

Oil return holes in the piston oil ring groove provide for the return of oil to the crankcase.

The pistons are cooled and the piston pins are lubricated by spray tubes positioned in the cylinder block under each cylinder liner. A drilled passage connects the spray tubes directly to the oil manifold. The spray tubes are held by nuts which are accessible under the inspection covers on the right side of the engine cylinder block.

PISTONS

Removal and Installation

1. Drain the lubricating oil and the engine coolant.
2. Remove the cylinder heads as described in the topic, CYLINDER HEAD REMOVAL.
3. Remove the carbon from the inside top surface of the cylinder liner.
4. Remove the cylinder block inspection covers or the oil pan and remove the connecting rod bearing caps as described in the topic, CONNECTING ROD BEARING REMOVAL.
5. Rotate the crankshaft until the piston to be removed is at top dead center. Carefully push the connecting rod upward until the piston rings are out of the cylinder.
6. Lift out the piston and connecting rod assembly.
7. Before installing the piston, be sure the liners and pistons are clean and free of carbon.

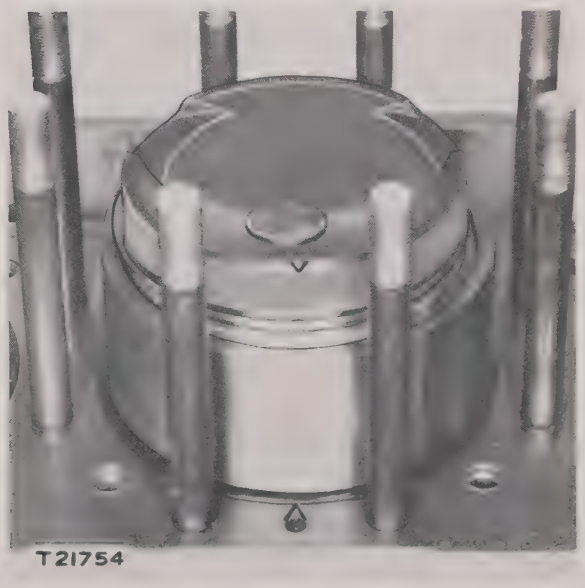

PISTON INSTALLATION

8. Place the 6H4140 Piston Ring Compressor Tool over the cylinder into which the piston is to be installed.

9. Oil the piston and rings and place the piston and connecting rod assembly into the cylinder liner until the ring rests on the compressor tool. Position the V-mark on top of the piston in alignment with the V-mark on top of the cylinder block. This will place the recess for the valves and the heat plug in the piston in the correct relationship to the valves and precombustion chamber in the cylinder head. Push the piston through the compressor and into the cylinder liner.

Cleaning and Inspecting Piston

Pistons which are not worn excessively or scored badly should be cleaned and used again. The ring grooves should be square and smooth. For permissible side clearance, see the topic, SPECIFICATIONS.

There are a number of good carbon solvents available for cleaning pistons. A carbon softener for use on diesel engine pistons is fresh, cold water. Soak pistons in cold water overnight, let them dry (preferably in sunlight) and most of the carbon including that in the ring grooves can be easily rubbed off.

The use of broken rings or carbon scrapers on ring grooves should be avoided, as the grooves can be cut. A stick of hard wood does a good job and will not scratch the piston.

The bottom of each ring groove must be clean and the oil return holes in the oil ring groove must be open before the installation of new rings.

The area above the top ring can be filed smooth, but pistons badly scored below the top ring groove should be replaced.

RINGS

Piston rings seal compression and control the amount of oil on the cylinder walls. If oil consumption is not excessive and compression is satisfactory, pistons should not be removed nor new rings installed when an engine is dismantled for some other reason.

To avoid damage to the piston, remove the rings with a 5H9621 Ring Expander.

The rings should be placed on the piston in the proper groove. Use the 5H9621 Piston Ring Expander when placing the rings in the grooves. The ring expander is not only a time saver but will also prevent breaking or distorting rings and damaging ring grooves.

RING EXPANDER

For the ring gap of a new ring in a new liner, see the topic, SPECIFICATIONS.

CAUTION

The intermediate compression ring has the TOP marked. Be sure to install this ring correctly.

When new piston rings are to be used in worn cylinder liners, the ridge at the top of the liner should be raised as recommended in the topic, RECONDITIONING CYLINDER LINERS.

Whenever new rings, piston assemblies or piston and liner groups are installed, be sure to run-in the engine on a conditioning schedule before operating at normal load and speed. Do not run the engine idle for a long period after installing new rings or liners. Rings will not seat during idle operation. See the topic, RUNNING-IN SCHEDULE.

RUNNING-IN SCHEDULE

For the correct running-in procedures, follow the information that accompanies piston rings, piston assemblies and piston and liner groups sent from the Caterpillar Parts Department.

CONNECTING RODS

Connecting rod bearings are located in the crankshaft end of the connecting rod. The bearing caps and rods are numbered consecutively, 1 up, from the front of the engine on the right side so that the numbers can be seen through the inspection openings on the right side of the cylinder block. The rods should be reassembled with the numbers in this position.

CONNECTING ROD AND PISTON PIN

See the topic, PISTONS, for information on connecting rod and piston removal.

Connecting Rod Bearing Removal

Connecting rod bearings are the precision type and are to be installed without fitting or scraping. The bearing halves can be removed, inspected and replaced through the inspection openings without removing the rod from the engine.

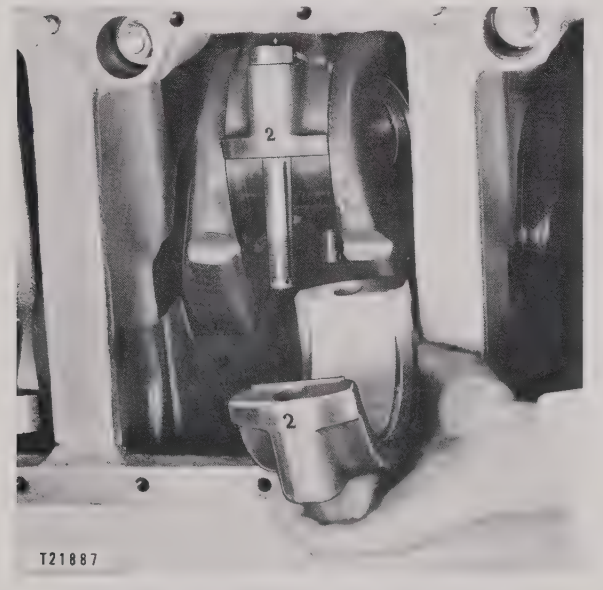

REMOVING CONNECTING ROD BEARING CAP

1. To remove a connecting rod bearing through the inspection opening, remove the cover and turn the crankshaft until the bearing to be removed is in the position shown in the illustration.
2. Remove the cotter pins and nuts from the connecting rod bolts. Remove the cap and bearing lower half as shown.
3. Remove the bearing upper half by turning the crankshaft or pushing the rod up slightly.

Connecting Rod Bearing Inspection

Connecting rod bearings are steel-backed, aluminum-lined. Larger particles of dirt and abrasives in the oil do not tend to embed in aluminum bearings. Such particles roll around between the bearing and crankshaft journal causing scratches in the aluminum bearing without actually becoming embedded in the aluminum. Such scratches are not necessarily harmful and do not indicate that the bearings should be replaced.

For permissible bearing clearance, see the topic, SPECIFICATIONS. If there is any question about the surface of a bearing, wash it with cleaning solvent to remove oil. If the surface feels rough and abrasive, install a new bearing. Another indication of dirt in the bearing is excessive crankshaft wear.

Bent rods should be discarded. Do not attempt to align connecting rods by bending them.

Connecting Rod Bearing Installation

When replacing the bearings, see that the protruding tab on the back of each bearing half lines up with its corresponding recess in the connecting rod and bearing cap. This locks the bearing in place and keeps it from rotating.

For the torque to be used when tightening the nuts, see the topic, SPECIFICATIONS. It is permissible to exceed this value by the amount necessary to turn the nut to the next slot for alignment with the cotter pin hole.

Piston Pin Bearing

It is not always necessary to replace piston pin bearings at each engine reconditioning. They may last many thousands of hours if the oil has been kept clean.

After the oil has been cleaned from the pin and bearing, it is possible to feel the clearance between them. This normal oil clearance must not be mistaken for wear.

For permissible clearance see the topic, SPECIFICATIONS.

New connecting rods have the piston pin bearing bored in a special machine which maintains the proper center-to-center distance and parallelism of the connecting rod bearing and piston pin bore. Reconditioned rods should be machined in the same manner. See the topic, SPECIFICATIONS, for the correct center-to-center distance.

After pressing a new bearing in place, it should be machined accurately on a 2H6782 Rod Boring Machine. For the correct piston pin bearing bore size, see the topic, SPECIFICATIONS.

Pistons, Rings and Connecting Rods

(Natural Gas Engines)

PISTONS AND RINGS

The aluminum alloy piston has three rings, consisting of two compression rings and one oil ring. All rings are located above the piston pin bore. The top compression ring seats in an integral cast iron band and the single oil ring is spring-loaded. Holes **(2)** in the groove for the oil ring provide for the return of oil to the crankcase.

The full floating piston pin **(1)** is retained by two snap rings **(3)** which fit in grooves in the pin bore.

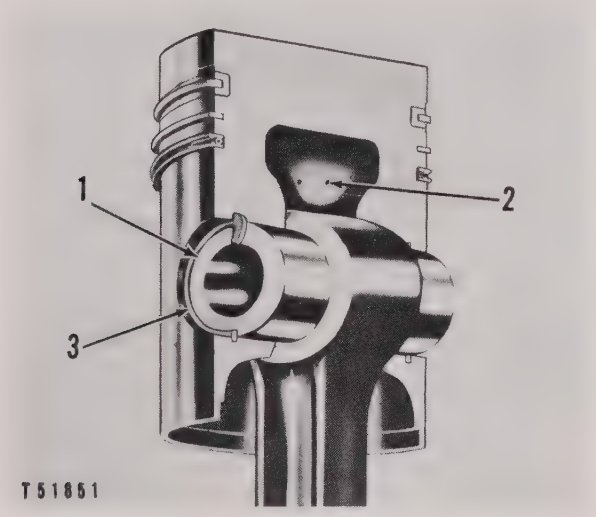

PISTONS AND RINGS
1–Piston pin. 2–Oil return hole. 3–Snap ring (two).

PISTON AND RING LUBRICATION

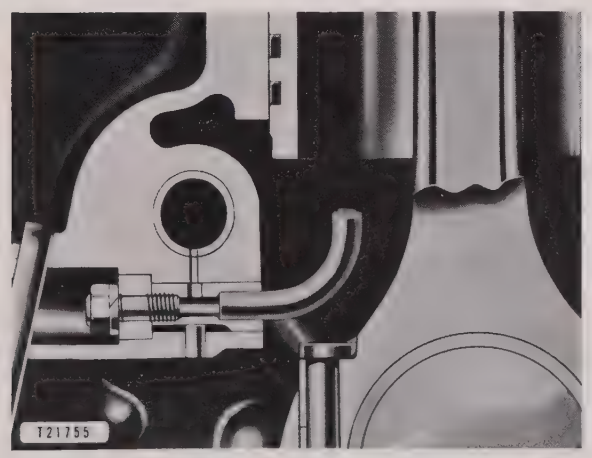

POSITION OF SPRAY TUBE

The pistons, the rings, and the cylinder liners are lubricated by the oil that is splashed or thrown by the crankshaft while the engine is in operation.

Oil return holes in the piston oil ring groove provide for the return of oil to the crankcase.

The pistons are cooled and the piston pins are lubricated by spray tubes positioned in the cylinder block under each cylinder liner. A drilled passage connects the spray tubes directly to the oil manifold. The spray tubes are held by nuts which are accessible under the inspection covers on the right side of the engine cylinder block.

PISTONS

Removal and Installation

1. Drain the lubricating oil and the engine coolant.
2. Remove the cylinder heads as described in the topic, CYLINDER HEAD REMOVAL.
3. Remove the carbon from the inside top surface of the cylinder liner.
4. Remove the cylinder block inspection covers or the oil pan and remove the connecting rod bearing caps as described in the topic, CONNECTING ROD BEARING REMOVAL.
5. Rotate the crankshaft until the piston to be removed is at top dead center. Carefully push the connecting rod upward until the piston rings are out of the cylinder.
6. Lift out the piston and connecting rod assembly.
7. Before installing the piston, be sure the liners and pistons are clean and free of carbon.

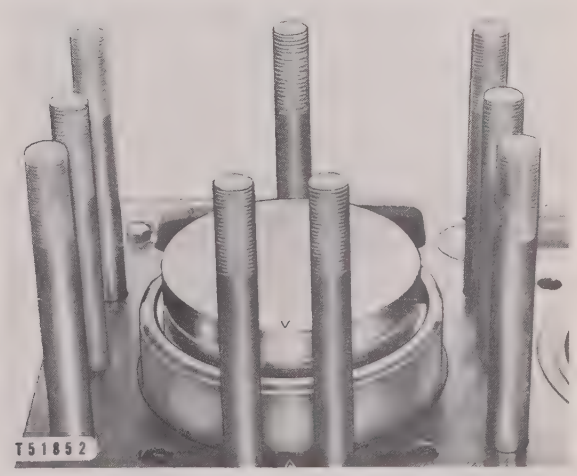

PISTON INSTALLATION

8. Place the 6H4140 Piston Ring Compressor over the cylinder into which the piston is to be installed.

9. Oil the piston and rings and place the piston and connecting rod assembly into the cylinder liner until the ring rests on the compressor. Position the V-mark on top of the piston in alignment with the V-mark on top of the cylinder block. Push the piston through the compressor and into the cylinder liner.

Cleaning and Inspecting Piston

Pistons which are not worn excessively or scored badly should be cleaned and used again. The ring grooves should be square and smooth. For permissible side clearance, see the topic, SPECIFICATIONS.

There are a number of good carbon solvents available for cleaning pistons. A carbon softener for use on engine pistons is fresh, cold water. Soak pistons in cold water overnight, let them dry (preferably in sunlight) and most of the carbon including that in the ring grooves can be easily rubbed off.

The use of broken rings or carbon scrapers on ring grooves should be avoided, as the grooves can be cut. A stick of hard wood does a good job and will not scratch the piston.

The bottom of each ring groove must be clean and the oil return holes in the oil ring groove must be open before the installation of new rings.

The area above the top ring can be filed smooth, but pistons badly scored below the top ring groove should be replaced.

RINGS

Piston rings seal compression and control the amount of oil on the cylinder walls. If oil consumption is not excessive and compression is satisfactory, pistons should not be removed nor new rings installed when an engine is dismantled for some other reason.

To avoid damage to the piston, remove the rings with a 5H9621 Ring Expander.

The rings should be placed on the piston in the proper groove. Use the 5H9621 Piston Ring Expander, when placing the rings in the grooves. The ring expander is not only a time saver but will also prevent breaking or distorting rings and damaging ring grooves.

For the ring gap of a new ring in a new liner, see the topic, SPECIFICATIONS.

CAUTION

The bottom compression ring has the TOP marked. Be sure to install this ring correctly.

RING EXPANDER

When new piston rings are to be used in worn cylinder liners, the ridge at the top of the liner should be raised as recommended in the topic, RECONDITIONING CYLINDER LINERS.

Whenever new rings, piston assemblies or piston and liner groups are installed, be sure to run-in the engine on a conditioning schedule before operating at normal load and speed. Do not run the engine idle for a long period after installing new rings or liners. Rings will not seat during idle operation. See the topic, RUNNING-IN SCHEDULE.

RUNNING-IN SCHEDULE

For the correct running-in procedures, follow the information that accompanies piston rings, piston assemblies and piston and liner groups sent from the Caterpillar Parts Department.

CONNECTING RODS

Connecting rod bearings are located in the crankshaft end of the connecting rod. The bearing caps and rods are numbered consecutively, 1 up, from the front of the engine on the right side so that the

CONNECTING ROD AND PISTON PIN

numbers can be seen through the inspection openings on the right side of the cylinder block. The rods should be reassembled with the numbers in this position.

See the topic, PISTONS, for information on connecting rod and piston removal.

Connecting Rod Bearing Removal

Connecting rod bearings are the precision type and are to be installed without fitting or scraping. The bearing halves can be removed, inspected and replaced through the inspection openings without removing the rod from the engine.

REMOVING CONNECTING ROD BEARING CAP

1. To remove a connecting rod bearing through the inspection opening, remove the cover and turn the crankshaft until the bearing to be removed is in the position shown in the illustration.
2. Remove the cotter pins and nuts from the connecting rod bolts. Remove the cap and bearing lower half as shown.
3. Remove the bearing upper half by turning the crankshaft or pushing the rod up slightly.

Connecting Rod Bearing Inspection

Connecting rod bearings are steel-backed, aluminum-lined. Larger particles of dirt and abrasives in the oil do not tend to embed in aluminum bearings. Such particles roll around between the bearing and crankshaft journal causing scratches in the aluminum bearing without actually becoming embedded in the aluminum. Such scratches are not necessarily harmful and do not indicate that the bearings should be replaced.

For permissible bearing clearance, see the topic, SPECIFICATIONS. If there is any question about the surface of a bearing, wash it with cleaning solvent to remove oil. If the surface feels rough and abrasive, install a new bearing. Another indication of dirt in the bearing is excessive crankshaft wear.

Bent rods should be discarded. Do not attempt to align connecting rods by bending them.

Connecting Rod Bearing Installation

When replacing the bearings, see that the protruding tab on the back of each bearing half lines up with its corresponding recess in the connecting rod and bearing cap. This locks the bearing in place and keeps it from rotating.

For the torque to be used when tightening the nuts, see the topic, SPECIFICATIONS. It is permissible to exceed this value by the amount necessary to turn the nut to the next slot for alignment with the cotter pin hole.

Piston Pin Bearing

It is not always necessary to replace piston pin bearings at each engine reconditioning. They may last many thousands of hours if the oil has been kept clean.

After the oil has been cleaned from the pin and bearing, it is possible to feel the clearance between them. This normal oil clearance must not be mistaken for wear.

For permissible clearance see the topic, SPECIFICATIONS.

New connecting rods have the piston pin bearing bored in a special machine which maintains the proper center-to-center distance and parallelism of the connecting rod bearing and piston pin bore. Reconditioned rods should be machined in the same manner. See the topic, SPECIFICATIONS, for the correct center-to-center distance.

After pressing a new bearing in place, it should be machined accurately on a 2H6782 Rod Boring Machine. For the correct piston pin bearing bore size, see the topic, SPECIFICATIONS.

Cylinder Liners

Cylinder liner surfaces are machined, hardened, ground, honed, and chemically treated to assure proper break-in. The resultant surface is so hard that ordinary boring tools will not machine it. Liners, pistons and rings are available from the factory in standard sizes only and require no fitting when they are installed.

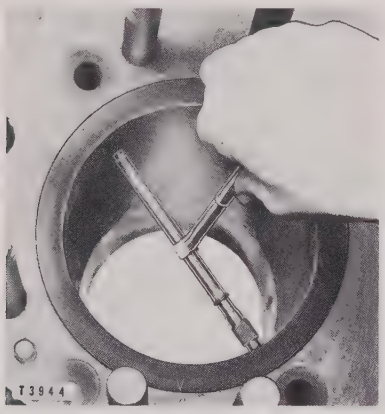

CHECKING LINER WEAR

Cylinder liners should be replaced when they are worn at the top of the ring travel more than .020" or when they are scratched or scored.

Liner wear should be checked with inside micrometers, as shown.

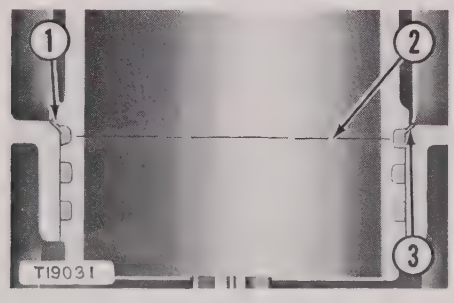

LINER SEALS
1–Top liner seal. 2–Center line of the top seal ring groove. 3–Cylinder bore chamfer.

Three O-ring seals fit in grooves on the lower end of each liner. The top seal **(1)** protects the cylinder bore chamfer **(3)** from rust and scale. The cylinder bore chamfer is machined to permit the lower edge of the chamfer to align with the center line **(2)** of the top seal ring groove as illustrated.

REMOVING AND INSTALLING CYLINDER LINERS

1. Drain the cooling system.
2. Remove the cylinder heads, the connecting rods and the pistons as outlined in their respective topics.
3. Place a piece of cardboard or heavy gasket material through the inspection openings as illustrated, to protect the inside of the engine.
4. Install the 7F1857 Puller, the 6H4141 Adapter Plate and the 7F9540 Hydraulic Puller.
5. Remove the cylinder liner and clean the water jacket sediment from the cylinder block.
6. When installing the cylinder liner, always use new rubber seals. Coat the rubber seals with liquid soap to ease installation.

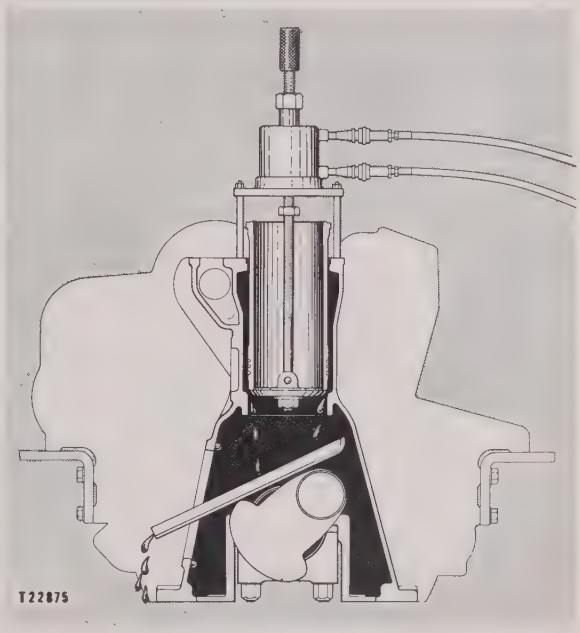

PULLING CYLINDER LINER WITH HYDRAULIC PULLER

7. Lower the cylinder liner carefully into the block. The liners can be driven into place by using a suitable driver, or by placing the puller adapter on the top of the liner. A block of hard wood, to be used as a driving block, is then placed on the puller adapter.
8. Drive the liner into the cylinder block until it bottoms. Then hit the block of wood several light taps, to assure that the liner is in. If the last blow bottoms the liner too hard, the liner may bounce back out a trifle.

NOTE

Properly installed liners should extend slightly above the face of the cylinder block. This in-

sures proper holding and sealing of the cylinder liner against the cylinder head gasket when the cylinder head is drawn down. Some liners may feel slightly loose in the cylinder block, yet serve satisfactorily without water or antifreeze leaking past the rubber seals.

9. Remove the cardboard and assemble the parts in the reverse order of removal.

RECONDITIONING CYLINDER LINERS

Removing Ridge from Worn Cylinder Liners

When new piston rings are to be used in worn cylinder liners, the ridge in the liner at the top of the ring travel should be raised to provide clearance for the new top ring. Since the liners are too hard for ordinary tools, a liner ridge boring tool should be used. The illustration shows how the tool is installed. Information regarding the tool illustrated is available upon request.

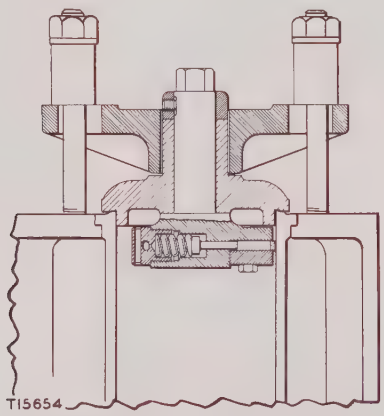

LINER RIDGE BORING TOOL

The tungsten carbide tool bit is spring-loaded and specially ground so it will follow the worn contour of the liner and will not cut deeper than the worn surface. Instructions for its use accompany the tool.

CAUTION

Be careful not to rotate the tool counterclockwise when the tool bit is against the liner wall. Doing so will break the cutting edge.

If the engine does not break in properly, see the topic, RUNNING-IN SCHEDULE.

Main Bearings

The main bearings and caps support the crankshaft in place in the cylinder block.

The main bearings are of the steel-backed, aluminum-lined precision type. Tabs are punched outward on the bearing half at the parting line, and fit into recesses in the cylinder block and bearing cap, securing the bearing and preventing it from rotating. This provides an uninterrupted bearing surface in the most highly-loaded area, improving the loading conditions and giving maximum resistance to fatigue failures.

The crankshaft thrust is taken on the flange of the lower half of the rear main bearing as illustrated. The upper half of the rear main bearing does not include a flange.

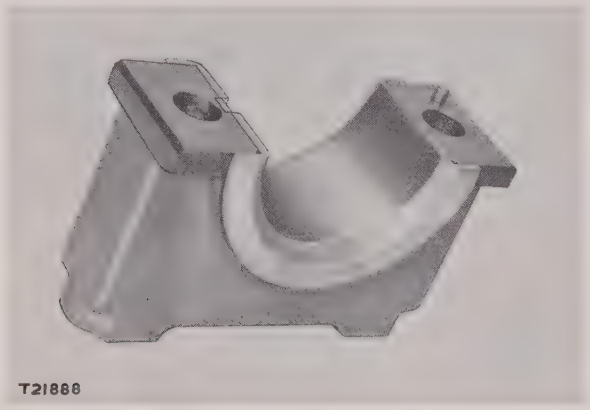

LOWER HALF OF REAR MAIN BEARING

REMOVING AND INSTALLING MAIN BEARING

REMOVING MAIN BEARING

1. Remove the pan. See the covering topic.
2. Remove the front and rear scavenging tubes.
3. Remove the oil pump and oil pump drive. See the covering topic.
4. Use either a pry bar and a plastic hammer or the 8B7548 Push Puller and the 8B7553 Adapter and 8B7554 Bearing Pulling Attachment to remove the main bearing caps. The recesses in the bearing cap can be used as a location for attaching the puller.
5. The main bearing upper halves can be removed by use of the tool shown in the illustration.

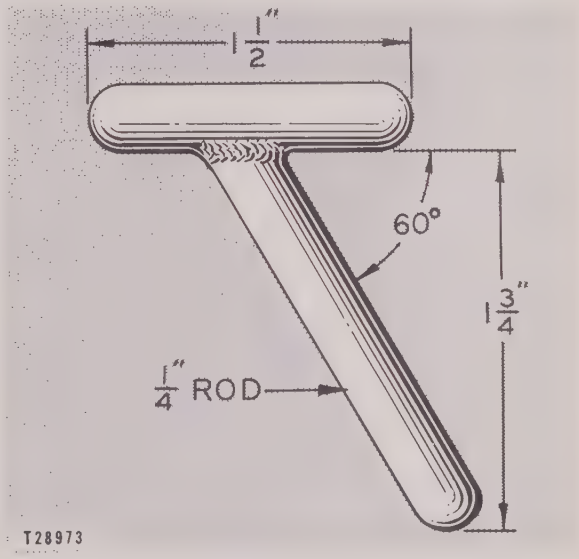

TOOL FOR REMOVING AND INSTALLING MAIN BEARINGS

Place the tool in the drilled oil hole **(1)** in the crankshaft and roll the bearing half out by rotating the crankshaft.

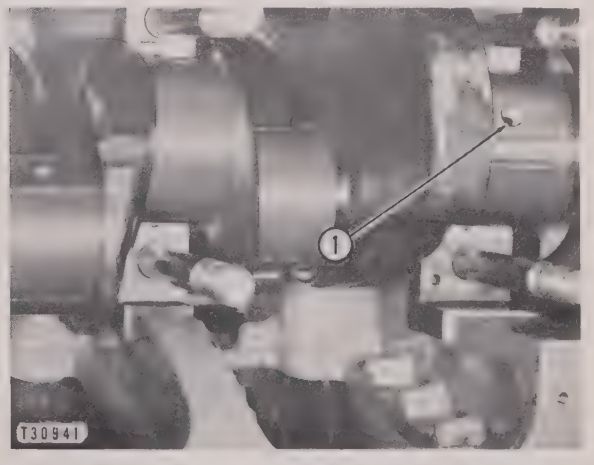

REMOVING MAIN BEARING
1–Oil hole.

Before installing a bearing, wash it thoroughly and wipe the outer surface dry. Rotate the upper half into position in the same manner in which it was removed. Remove the tool, if used, from the oil hole in the crankshaft. Since only the lower half of the rear main bearing takes the thrust, full contact between the bearing and crank thrust surfaces is assured. Place the lower half in the cap and install the cap. See the topic, SPECIFICATIONS, for the proper torque value to use on the stud nuts. It is permissible to exceed the value by the amount necessary to turn to the next slot for alignment with the cotter pin hole. Complete the assembly in the reverse order of disassembly.

MAIN BEARING INSPECTION

Abrasive materials may roll around between the bearing and crankshaft journal causing scratches in the aluminum bearing without actually becoming embedded in the aluminum. Such scratches are not necessarily harmful and do not indicate that the bearings should be replaced.

Make certain that the cylinder block and bearing caps are perfectly clean and free from burrs and high spots. Handle the bearings carefully to avoid marring them. Leave them dry except for the grease holding the lead wire when checking clearances, and lubricate them generously for final installation.

If there is any question about the surface of a bearing, wash it with cleaning solvent to remove oil. If the surface feels rough and abrasive, install a new bearing. Another indication of dirt in the bearing is excessive crankshaft wear.

CHECKING MAIN BEARING CLEARANCE

See the topic, SPECIFICATIONS, for the bearing clearance in a new engine and for the permissible clearance.

The clearances of the main bearings can be measured without removing the crankshaft if the engine is in an upright position. However, the crankshaft must be held against the upper halves of the main bearings, otherwise the weight of the crankshaft will compress the lead wire slightly and indicate a lesser clearance than really exists.

The bearing clearance can be checked by placing soft lead wire between the lower bearing half and the crankshaft. Coat two one-inch lengths of the wire with soft grease and place them diagonally on the bearing. The soft grease will keep the wires in position while installing and tightening the cap. Turn the crankshaft one complete revolution. Remove the cap and measure the thickness of the compressed wire with a 0″ to 1″ micrometer to determine the bearing clearance. Lead wire for the purpose can be obtained from the Parts Department by ordering part number 5B1161.

REPLACEMENT MAIN BEARINGS

Precision main bearing halves, machined to provide proper clearance, are obtainable in complete sets and are to be installed without further machining or hand fitting. Single replacement bearings (both upper and lower half) can also be obtained and installed without special fitting. As a rule, however, it is good practice to replace the complete set if any one of the bearings needs to be replaced. If only one new bearing is installed and the other bearings are worn to any extent, the new bearing will carry more than its normal share of the load and might be damaged as a result.

Precision main bearings are also obtainable for use with chankshafts reground to .025″ or .050″ undersize.

Crankshaft

The crankshaft main bearing journals are 4.624"-4.625" in diameter and the connecting rod bearing journals are 4.124"-4.125" in diameter. Steel-backed, aluminum-lined bearings are used, with the lower half of the rear main bearing taking the crankshaft thrust on a flange-type bearing. The crankshaft timing gear is cut integrally on the rear of the crankshaft and is induction hardened.

At the front, an oil thrower and ring sealing arrangement are used to prevent oil leakage at this point. The rear, besides having an oil thrower and an oil seal ring to prevent oil leakage, also has a dirt thrower on the flywheel side of the slinger.

A crankshaft should be replaced or reground if wear on the main or connecting rod bearing journals exceeds .010", if the connecting rod journals are more than .007" out-of-round, or if the journals are scored.

If a crankshaft is reground, it should be ground .050" undersize on the main bearings and .025" or .050" on the connecting rod bearing journals. Undersize main and connecting rod bearings are available for use with crankshafts reground to the above dimensions.

CRANKSHAFT REMOVAL AND INSTALLATION

Mount the engine on a 9F3829 Engine Positioning Stand, if available, and remove the following: the oil pan, oil pump and tubes, oil pump drive mechanism, front support, flywheel and the flywheel housing. See the covering topics.

Remove the connecting rod bearing caps, and push the pistons and rods upward into the cylinders far enough to clear the crankshaft.

Wrap the bearing surface on the crankshaft for number two and number five connecting rods with heavy cloth. Place a cable around the cloth and attach the cable to a suitable hoist. Tighten the cable just enough to prevent the crankshaft from moving when the main bearing caps are removed. Remove the main bearing caps and lift the crankshaft from the engine.

CAUTION

Be certain not to damage the oil throwers on either end of the crankshaft during removal. Provide a suitable stand or blocking device to position the crankshaft.

Install in reverse order of removal. When installing the crankshaft, lubricate the bearings and bearing surfaces and check the bearing clearance according to the SPECIFICATIONS. Check the crankshaft end clearance as described in the covering topic. Make certain the main bearing caps and the connecting rod bearing caps are tightened to the specified torque as given under the topic SPECIFICATIONS.

CRANKSHAFT END THRUST

The crankshaft end thrust is taken on the flanges of the lower half of the rear main bearing described in the topic, MAIN BEARINGS.

End clearance can be checked by pushing the crankshaft as far as it will go to one end of the cylinder block and using a thickness gauge to measure the clearance between the machined face of the crankshaft flange and the flange of the lower half of the rear main bearing.

See the topic, SPECIFICATIONS, for crankshaft end clearance.

CRANKSHAFT OIL THROWER

The front end of the engine is sealed by an oil thrower and one oil seal ring which mates with a slinger mounted in the engine front support. The thrower confines the crankcase oil in its compartment while the oil seal ring provides an additional oil seal as well as excluding dirt.

The rear end of the engine is sealed with a thrower similar to the thrower at the front of the engine. It also has one oil ring seal and mates with an oil slinger bolted to the flywheel housing. This slinger in turn also mates with a portion of the flywheel which is shaped like a thrower. See the topic, FLYWHEEL AND FLYWHEEL HOUSING.

The throwers are pressed onto both ends of the crankshaft.

Removal and Installation

Remove the oil seal rings with snap ring pliers. Pull the oil thrower from the crankshaft with a suitable puller arrangement. If the thrower is damaged, it must be replaced.

Heat the thrower, preferably in oil, and with a suitable driver, install the thrower on the crankshaft. When installing the thrower, make certain the ring groove portion of the thrower is turned toward the end of the crankshaft.

The front thrower must be installed until a dimension **(A)** 1.262" - 1.273" is obtained between the outside face of the crankshaft flange and the outside face of the thrower.

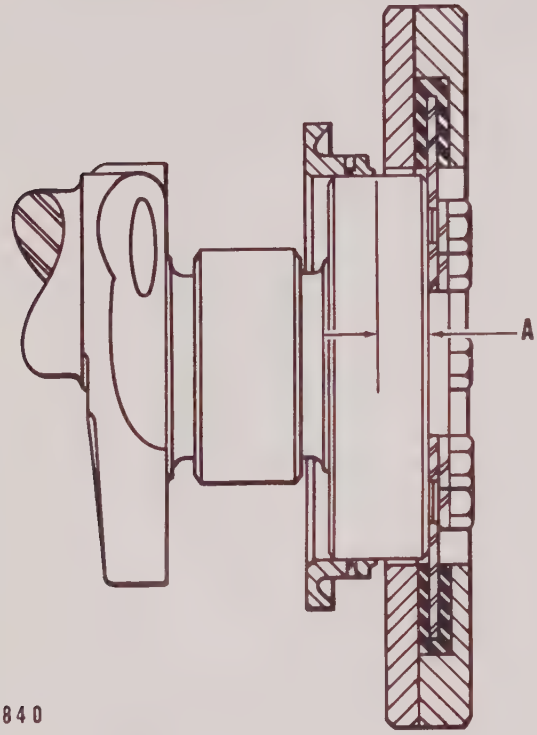

THROWER INSTALLATION
(FRONT)
A–1.263" - 1.273"

The rear thrower must be bottomed against the timing gear as shown.

Runout on the ring groove face and bottom, which accomodates the oil seal rings of the throwers, must not exceed .006" total indicator movement when installed on the crankshaft.

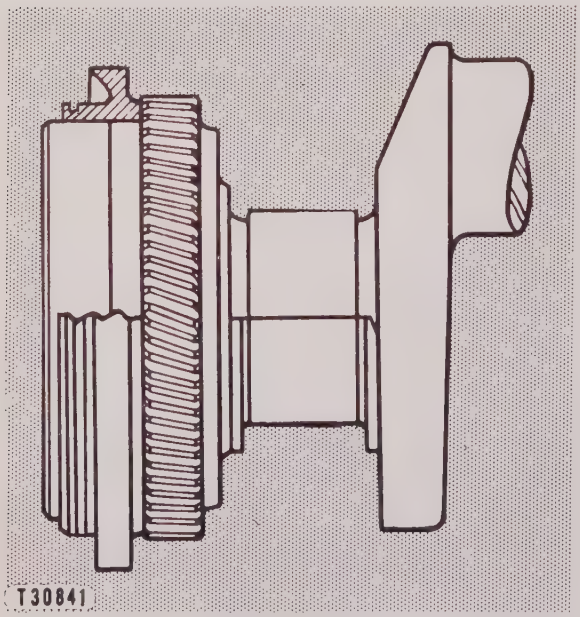

THROWER INSTALLATION
(REAR)

Install the oil seal rings and check the ring gaps. The ring gap should be from .010"-.015" when assembled. Check the ring gap by inserting the ring into the thrower groove and placing a thickness gauge between the two ends of the ring.

NOTE

The piston ring should be assembled with the ring gap at the top, and it should be lubricated.

Flywheel and Flywheel Housing

FLYWHEEL AND RING GEAR REMOVAL AND INSTALLATION

Before removing the flywheel, make certain that the alignment marks are visible on the flywheel and on the crankshaft flange.

1. Remove the cover **(1)** and the timing pointer.
2. Attach the 8F4423 Flywheel Lifter and a hoist to the flywheel.
3. Bend the locks **(2)** and remove the bolts and locks.
4. Remove the flywheel.

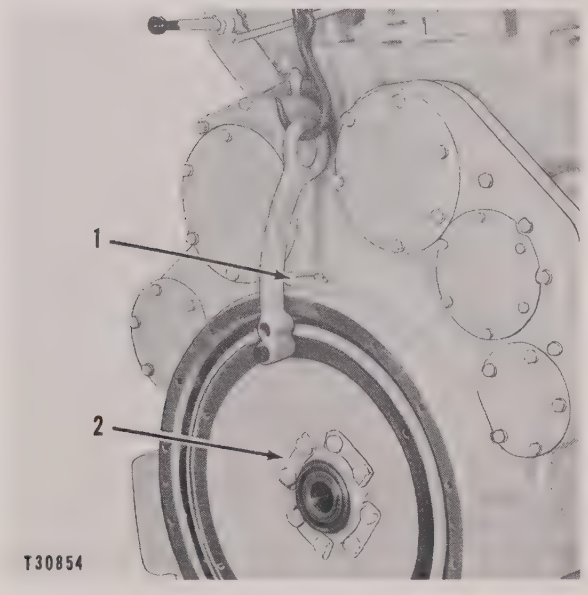

FLYWHEEL REMOVAL
1–Cover. 2–Lock.

5. Remove the bolts and locks holding the ring gear on the flywheel.
6. Press the ring gear off the flywheel.
7. Before installing the ring gear, clean both the ring gear and flywheel and remove all burrs.
8. Heat the ring gear and install it on the flywheel. Make certain the chamfered portion of the teeth on the ring gear are to the rear of the flywheel.
9. When installing the flywheel, use guide studs in the crankshaft flange.
10. Align the marks on the flywheel and crankshaft flange and install the flywheel.

PROCEDURE FOR CHECKING FLYWHEEL RUN-OUT

Checking Flywheel Face Run-out

1. Clean the face of the flywheel where the dial indicator will be in contact, to assure a correct reading.
2. Mount a dial indicator so the anvil contacts the face of the flywheel, as shown in the illustration.
3. Pry the crankshaft forward or backward, and adjust the dial indicator to read .000".
4. Turn the crankshaft and take readings every 90°. Pry the crankshaft in the same direction each time before taking readings to be sure the end clearance is always in the same direction.
5. The readings should not exceed .006" total run-out.

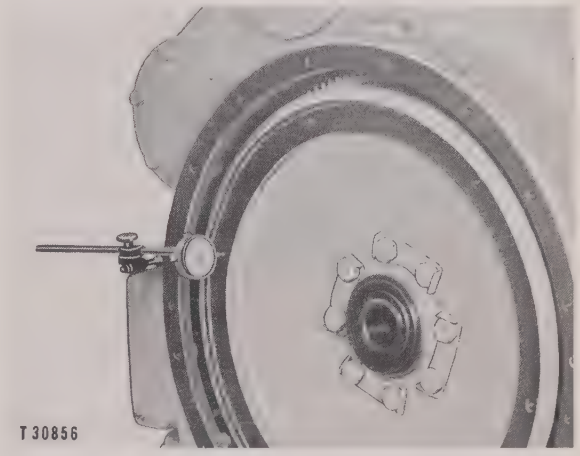

CHECKING FLYWHEEL FACE RUN-OUT

Checking Flywheel Bore Run-out

1. Clean the counterbore surface of the flywheel where the dial indicator will be in contact, to assure a correct reading.
2. Install a dial indicator in contact with the flywheel bore as shown in the illustration.
3. Adjust the dial indicator to read .000". Take readings every 90° around the flywheel. The indicator readings must not exceed .006" for the flywheel bore run-out.

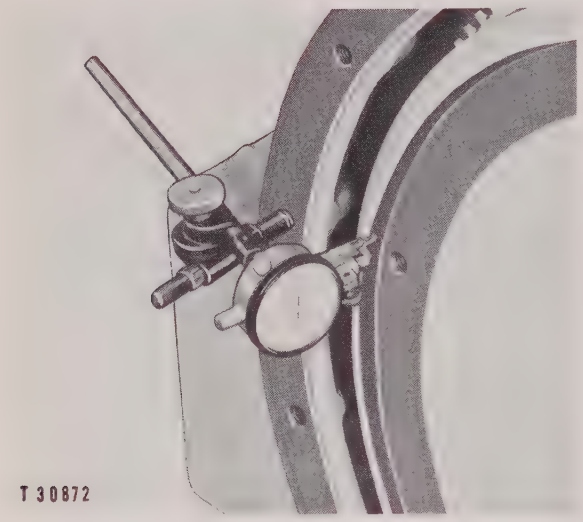

CHECKING FLYWHEEL BORE RUN-OUT

FLYWHEEL HOUSING REMOVAL AND INSTALLATION

1. Remove the flywheel. See the covering topic.
2. Remove the bolts that hold the oil pan to the flywheel housing.
3. Loosen the bolts that hold the oil pan to the cylinder block and install spacers at the rear between the oil pan and the cylinder block.
4. Remove the bolts which hold the engine rear supports to the engine base, and loosen the bolts which hold the engine front supports to the engine base.
5. Raise the rear of the engine and place blocks under the engine oil pan, and lower the engine onto the blocks. This will allow the clearance needed to remove the flywheel housing.

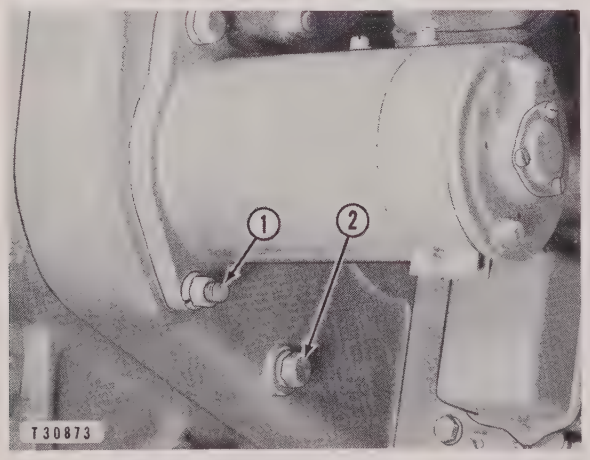

PREPARING TO REMOVE FLYWHEEL HOUSING
1–Bolt. 2–Bolt.

6. Remove the nut from the bolt **(1)**, which passes through the flywheel housing, timing gear housing and the generator mounting bracket, and remove the bolt **(2)**.
7. Remove the covers **(3)** and the bolts **(4)** and **(5)**.
8. Install two 3/8" - 16 (NC) eyebolts and a suitable hoist as illustrated.

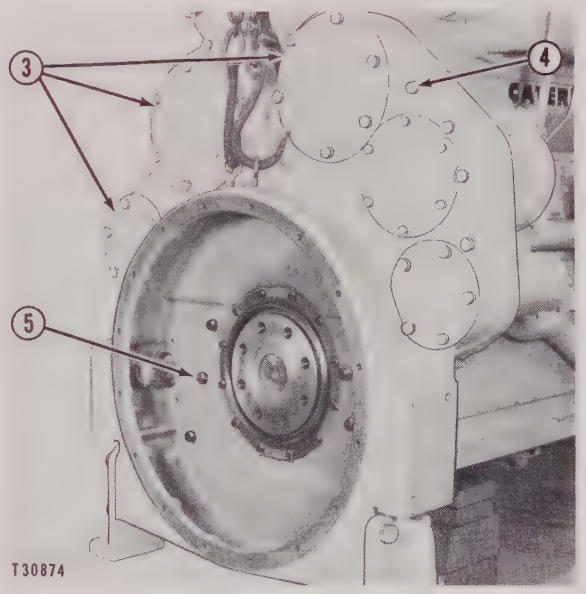

PREPARING TO REMOVE FLYWHEEL HOUSING
3–Covers. 4–Bolt. 5–Bolt.

9. Remove the bolts **(6)** and **(7)**.
10. Loosen the bolt **(8)**. Separate the flywheel housing from the block and continue to back off the bolt as the flywheel housing is being moved back from the timing gear housing. When the bolt **(8)** comes loose, move the housing away from the rest of the engine.

NOTE

When the starting engine is not removed, the bolt **(8)** cannot be removed. At the time of installation, start the flywheel housing onto the dowels of the timing gear housing and thread the bolt into the flywheel housing as the housing is moved into place.

11. Replace all gaskets and install in the reverse of removal.

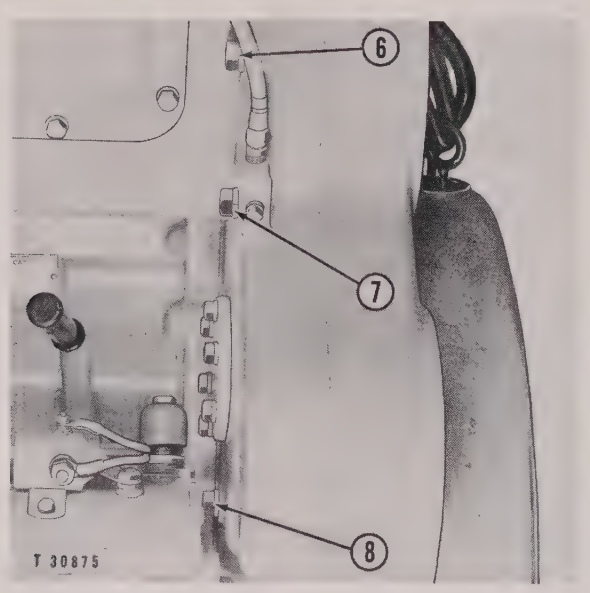

PREPARING TO REMOVE FLYWHEEL HOUSING
6–Bolt. 7–Bolt. 8–Bolt.

Oil Slinger Removal and Installation

An oil slinger **(4)** is located in the bore of the flywheel housing **(2)** and mates with an oil ring seal **(5)** on the crankshaft thrower **(3)**. The slinger acts as a labyrinth type seal with the portion of the flywheel, which forms a thrower **(1)**, and the crankshaft thrower **(3)**. The slinger holds the oil ring seal **(5)** in tension to form an important part of the oil seal for the crankcase as well as a seal to prevent dirt from entering the crankcase.

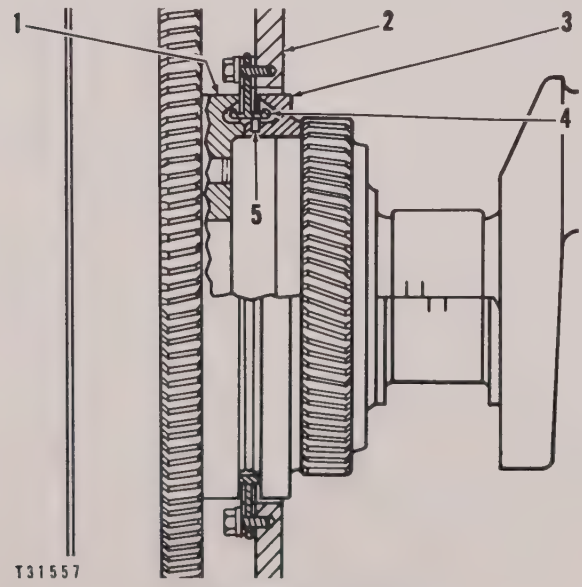

OIL SLINGER LOCATION
1–Flywheel thrower. 2–Flywheel housing. 3–Crankshaft thrower. 4–Slinger. 5–Oil ring seal.

The oil ring seal is held stationary by the slinger in normal operation. If the oil ring seal should turn with the crankshaft thrower, the slinger may become damaged and effect its sealing action. If there is a loss of crankcase oil into the flywheel housing through the rear seal, the slinger may be removed for inspection or replacement by following the procedure described. See also the topic, Crankshaft Oil Thrower.

1. Remove the flywheel as described in the topic, FLYWHEEL AND RING GEAR REMOVAL AND INSTALLATION.
2. Remove the bolts **(7)** and locks **(6)**.

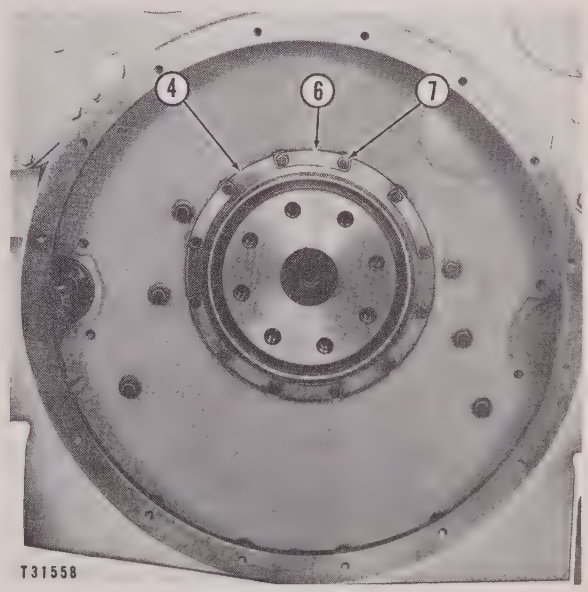

REMOVING THE OIL SLINGER
4–Slinger. 6–Lock. 7–Bolt.

3. Pry evenly around the outer diameter of the slinger with a suitable bar and remove the slinger from the flywheel housing.
4. Place guide pins in the flywheel housing to guide the slinger into the housing.
5. Drive the slinger into the bore evenly with a suitable block of wood. The slinger fits over the oil ring seal and bottoms on the shoulder of the flywheel housing bore.

CAUTION

Take care when installing the slinger to avoid breaking or damaging the oil ring seal on the crankshaft thrower.

6. Install the bolts and secure with the locks.

PROCEDURE FOR CHECKING FLYWHEEL HOUSING RUN-OUT

Checking Flywheel Housing Face Run-out

To assure accurate results, always have the flywheel removed when checking flywheel housing run-out.

1. Clean the face and counterbore where the dial indicator will be in contact, to assure a correct reading.
2. Fasten a dial indicator securely to the crankshaft flange and turn the crankshaft to position the dial indicator at point **(A)**.

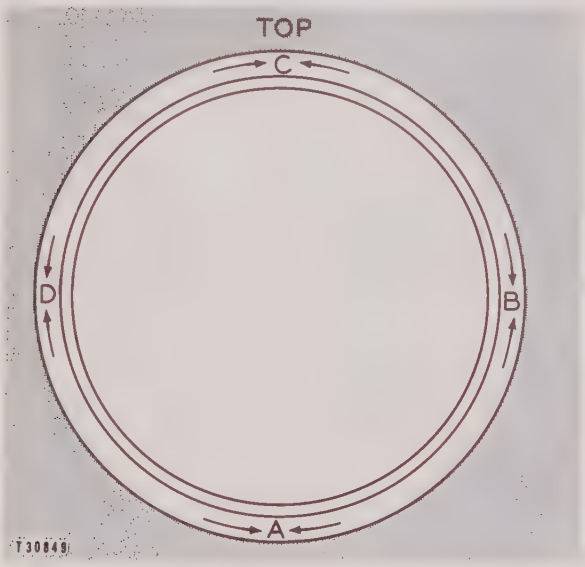

CHECKING FLYWHEEL HOUSING FACE RUN-OUT
A–Bottom. B–Right side. C–Top. D–Left side.

3. Pry the crankshaft forward and adjust the indicator to read .000″.
4. Turn the crankshaft and take readings at points **(B)**, **(C)** and **(D)**. Always pry the crankshaft forward before taking readings, to be sure the end clearance is always in the same direction.
5. The readings should not exceed .010″ total run-out for the flywheel housing face.

Checking Flywheel Housing Bore Run-Out

1. Install a dial indicator securely to the crankshaft flange and adjust it to read .000″ at the starting point **(1)**.
2. Turn the crankshaft 90° to position the dial indicator at **(2)**. Carefully pry the crankshaft toward the location **(2)** to permit the crankshaft to touch the halves of the main bearings. Take the indicator reading.
3. Turn the crankshaft to position the dial indicator at point **(3)**. Pry the crankshaft upward to permit the crankshaft to touch the upper halves of the main bearings, and take the indicator reading at this point.
4. Turn the crankshaft to position the dial indicator at point **(4)**. Take the readings at point **(4)** as described for point **(2)**.

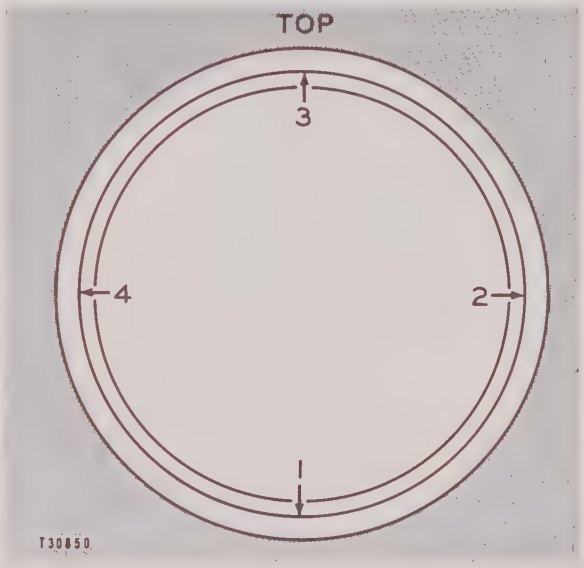

CHECKING FLYWHEEL HOUSING BORE RUN-OUT
1–Bottom. 2–Right side. 3–Top. 4–Left side.

NOTE

If any method is used other than the method described here for checking the run-out, always allow for bearing clearances in order to obtain correct readings.

5. The indicator readings should not exceed .010″ total run-out for the flywheel housing bore.

Service Manual
Section Index Tab
FORM 34261-2

HC64673

ISSUED 4-64

STARTING ENGINE

TABLE OF CONTENTS

	Section	Group
Index	3A-20	30.1
Specifications	1A-20	40
Specifications*	2A-20	40
Operation	3A-20	70
Operation*	8A-20	70.1
Removal	3A-20	80.2
Lubrication System	1A-20	90.1
Lubrication System*	8A-20	90.1
Fuel System	1A-20	100
Cylinder Head and Valves	1A-20	110
Cylinder Head and Valves*	3A-20	110
Cylinder Head and Valves†	12A-20	110
Pistons, Rings and Connecting Rods	1A-20	120
Pistons, Rings and Connecting Rods*	8A-20	120
Pistons, Rings and Connecting Rods†	12A-20	120
Timing Gear Housing	1A-20	130
Timing Gear Housing*	3A-20	130
Crankshaft, Flywheel and Main Bearings	1A-20	140
Crankshaft, Flywheel and Main Bearings*	8A-20	140.1
Crankshaft, Flywheel and Main Bearings†	15A-20	140
Camshaft	1A-20	150
Camshaft*	8A-20	150
Camshaft†	15A-20	150
Starting Mechanism	3A-20	160.1
Starting Mechanism*	3A-20	160.2

*Odd firing.

†Later odd firing.

ISSUED 7-58

STARTING ENGINE

INDEX

A

Adjustments:
- Carburetor ..... 100 –4
- Clutch 160.1–5
- Governor ..... 130 –3
- Starter Pinion Latches 160.1–2
- Valve Clearance ..... 110 –2

B

Bearings:
- Connecting Rod ..... 120 –1
- Main ..... 140 –1

Bearing, Piston Pin ..... 120 –1
Bushing, Valve Guide ..... 110 –2

C

Camshaft ..... 150 –1
Camshaft End Clearance ..... 150 –2
Carburetor ..... 100 –1
Clearances and Tolerances ..... 40 –1
Clutch 160.1–3
Clutch Housing 160.1–4
Connecting Rod Bearings ..... 120 –1
Cooling ..... 70 –1
Crank Mechanism, Hand ..... 130 –2
Crankshaft ..... 140 –1
Crankshaft Gear ..... 140 –1
Cylinder Head ..... 110 –1
Cylinders ..... 120 –1

D

Data, Engine ..... 40 –1
Drive, Magneto Trunnion ..... 130 –3

F

Flywheel ..... 140 –1
Fuel System ..... 100 –1

G

Gear:
- Camshaft ..... 150 –2
- Crankshaft ..... 140 –1
- Oil Pump 90.1–2
- Transmission 160.1–3

Governor ..... 130 –2

H

Hand Crank Mechanism ..... 130 –1
Head, Cylinder ..... 110 –1
Housing:
- Clutch and Transmission 160.1–4
- Timing Gear ..... 130 –1

L

Latches, Starter Pinion 160.1–1
Lifters, Valve ..... 110 –2
Lubricating System 90.1–1

M

Magneto Trunnion Drive ..... 130 –1
Main Bearings ..... 140 –2

O

Oil:
- Pan 90.1–2
- Pump 90.1–2
- Pump Pressure Regulating Valve 90.1–3

Operation, Starting Engine ..... 70 –1

P

Pan, Oil 90.1–2
Pinion, Starter 160.1–1
Pistons ..... 120 –1
Piston Pin Bearings ..... 120 –1
Pressure Regulating Valve 90.1–3
Pump, Oil 90.1–2

R

Reboring Cylinders ..... 120 –1
Removing Engine 80.2–1
Rings, Piston ..... 120 –1

S

Screen, Sump 90.1–2
Specifications:
- Cylinder Reboring ..... 120 –1
- General ..... 40 –1

Springs:
- Governor ..... 130 –2
- Valve ..... 110 –2

Starter Pinion 160.1–1
Starting Mechanism 160.1–1

T

Timing Gear Housing ..... 130 –1
Tolerances ..... 40 –1
Transmission 160.1–3

V

Valve:
- Clearance Adjustment ..... 110 –2
- Lifters ..... 110 –2
- Mechanism ..... 110 –1
- Pressure Regulating 90.1–3

Specifications

The specifications contain dimensions for new parts and a suggested guide for the amount of wear that might normally be considered a reasonable figure to use in determining when to replace parts. These wear dimensions are shown after the description, "permissible clearance". These specifications are provided to help determine when new parts should be installed. This information should not be regarded as the only factor in determining when to replace parts. Past performance should be the governing factor for part replacement. Even though parts are worn they may still be satisfactory. The remaining service life of these parts must be considered when deciding if parts should be replaced. If a machine is disassembled for reconditioning, it is well to replace parts not completely worn out if the remaining service life is deemed short.

General

Bore and stroke	3⅝ x 4
Brake horsepower	25 at 2700 RPM
Spark plug gap	.037 in.

Camshaft

Journal diameter, front and rear	2.1205 - 2.1215 in.
Bearing clearance	.0025 - .0045 in.
End clearance	.005 - .020 in.

Crankshaft

Main journal, diameter	2.1243 - 2.1250 in.
Main bearing clearance	.006 - .0097 in.
Permissible bearing clearance	.016 in.
End clearance, front main bearing	.005 - .010 in.
Permissible end clearance	.025 in.
Connecting rod, journal diameter	1.998 - 1.999 in.
Permissible out-of-roundness (journal)	.003 in.
Main bearing nut torque value	60 - 70 lb. ft.

Connecting Rod

Connecting rod bearing clearance	.0021 - .0052 in.
Permissible bearing clearance	.009 in.
Bolt nut torque value	36 lb. ft.

Cylinder Bore

Diameter	3.628 - 3.629 in.
Cylinder bore wear limit (out-of-round)	.003 in.
Cylinder bore wear limit (taper)	.005 in.

Cylinder Head

Stud nut (7/16") torque value	57 lb. ft.

Piston Pins

Clearance in rod bushing	.0008 - .0013 in.
Permissible clearance between bushing and pin	.003 in.
Clearance in piston	.0004 - .001 in.
Permissible clearance between piston and pin	.0025 in.

Piston Rings

Compression ring gap	.013 - .032 in.
Oil ring gap	.013 - .030 in.
Compression ring groove clearance	.0015 - .003 in.
Oil ring groove clearance	.001 - .0025 in.
Permissible groove clearance (new ring) compression and oil rings	.009 in.

Valves

Clearance (hot)	.008 in.
Exhaust valves	
Stem clearance in bushing	.002 - .004 in.
Permissible clearance in bushing (with new valve)	.007 in.
Valve seat angle	45°
Inlet valves	
Stem clearance in bushing	.002 - .004 in.
Permissible clearance in bushing (with new valve)	.005 in.
Valve seat angle	45°
Distance from top face of block to valve stem bushing (installed)	1 3/16 in.

Valve Timing (Zero Lift)

Exhaust opens	41° BBC
Exhaust closes	21° ATC
Inlet opens	15° BTC
Inlet closes	47° ABC

Valve Spring

Lbs. pressure	32.5 - 37.5
When compressed to	1 19/32 in.

Clutch

Latch spring adjustment (front face of locknut to rear face of gear)	1/4 - 5/16 in.
Distance from rear face of collar to front of external pinion shaft	2 3/8 in.

Specifications

The specifications contain dimensions for new parts and a suggested guide for the amount of wear that might normally be considered a reasonable figure to use in determining when to replace parts. These wear dimensions are shown after the description, "permissible clearance". These specifications are provided to help determine when new parts should be installed. This information should not be regarded as the only factor in determining when to replace parts. Past performance should be the governing factor for part replacement. Even though parts are worn they may still be satisfactory. The remaining service life of these parts must be considered when deciding if parts should be replaced. If a machine is disassembled for reconditioning, it is well to replace parts not completely worn out if the remaining service life is deemed short.

General

Bore and stroke	3⅝ x 4
Brake horsepower	25 at 2700 RPM
Spark plug gap	.037 in.

Camshaft

Journal diameter, front and rear	2.1205 - 2.1215 in.
Bearing clearance	.0025 - .0045 in.
End clearance	.005 - .020 in.

Crankshaft

Main journal, diameter	2.1243 - 2.1250 in.
Main bearing clearance	.006 - .0097 in.
Permissible bearing clearance	.016 in.
End clearance, front main bearing	.005 - .010 in.
Permissible end clearance	.025 in.
Connecting rod, journal diameter	1.998 - 1.999 in.
Permissible out-of-roundness (journal)	.003 in.
Main bearing nut torque value	60 - 70 lb. ft.

Connecting Rod

Connecting rod bearing clearance	.0021 - .0052 in.
Permissible bearing clearance	.009 in.
Bolt nut torque value	36 lb. ft.

Cylinder Bore

Diameter	3.628 - 3.629 in.
Cylinder bore wear limit (out-of-round)	.003 in.
Cylinder bore wear limit (taper)	.005 in.

Cylinder Head

Stud nut (7/16") torque value	57 lb. ft.

Piston Pins

Clearance in rod bushing	.0008 - .0013 in.
Permissible clearance between bushing and pin	.003 in.
Clearance in piston	.0004 - .001 in.
Permissible clearance between piston and pin	.0025 in.

Piston Rings

Compression ring gap	.013 - .032 in.
Oil ring gap	.013 - .030 in.
Compression ring groove clearance	.0015 - .003 in.
Oil ring groove clearance	.001 - .0025 in.
Permissible groove clearance (new ring) compression and oil rings	.009 in.

Valves

Clearance (hot)	.008 in.
Exhaust valves	
Stem clearance in bushing	.002 - .004 in.
Permissible clearance in bushing (with new valve)	.007 in.
Valve seat angle	45°
Inlet valves	
Stem clearance in bushing	.002 - .004 in.
Permissible clearance in bushing (with new valve)	.005 in.
Valve seat angle	45°
Distance from top face of block to valve stem bushing (installed)	1 3/16 in.

Valve Timing (Zero Lift)

Exhaust opens	41° BBC
Exhaust closes	21° ATC
Inlet opens	15° BTC
Inlet closes	47° ABC

Valve Spring

Lbs. pressure	32.5 - 37.5
When compressed to	1 19/32 in.

Clutch

Latch spring adjustment (front face of locknut to rear face of gear)	1/4 - 5/16 in.
Distance from rear face of collar to front of external pinion shaft	2 3/8 in.

Specifications

The specifications contain dimensions for new parts and a suggested guide for the amount of wear that might normally be considered a reasonable figure to use in determining when to replace parts. These wear dimensions are shown after the description, "permissible clearance". These specifications are provided to help determine when new parts should be installed. This information should not be regarded as the only factor in determining when to replace parts. Past performance should be the governing factor for part replacement. Even though parts are worn they may still be satisfactory. The remaining service life of these parts must be considered when deciding if parts should be replaced. If a machine is disassembled for reconditioning, it is well to replace parts not completely worn out if the remaining service life is deemed short.

General

Bore and stroke	3⅝ x 4
Brake horsepower	25 at 2700 RPM
Spark plug gap	.037 in.

Camshaft

Journal diameter, front and rear	2.1205 - 2.1215 in.
Bearing clearance	.0025 - .0045 in.
End clearance	.005 - .020 in.

Crankshaft

Main journal, diameter	2.1243 - 2.1250 in.
Main bearing clearance	.006 - .0097 in.
Permissible bearing clearance	.016 in.
End clearance, front main bearing	.005 - .010 in.
Permissible end clearance	.025 in.
Connecting rod, journal diameter	1.998 - 1.999 in.
Permissible out-of-roundness (journal)	.003 in.
Main bearing nut torque value	60 - 70 lb. ft.

Connecting Rod

Connecting rod bearing clearance	.0021 - .0052 in.
Permissible bearing clearance	.009 in.
Bolt nut torque value	36 lb. ft.

Cylinder Bore

Diameter	3.628 - 3.629 in.
Cylinder bore wear limit (out-of-round)	.003 in.
Cylinder bore wear limit (taper)	.005 in.

Cylinder Head

Stud nut (7/16") torque value	57 lb. ft.

Piston Pins

Clearance in rod bushing	.0008 - .0013 in.
Permissible clearance between bushing and pin	.003 in.
Clearance in piston	.0004 - .001 in.
Permissible clearance between piston and pin	.0025 in.

Piston Rings

Compression ring gap	.013 - .032 in.
Oil ring gap	.013 - .030 in.
Compression ring groove clearance	.0015 - .003 in.
Oil ring groove clearance	.001 - .0025 in.
Permissible groove clearance (new ring) compression and oil rings	.009 in.

Valves

Clearance (hot)	.008 in.
Exhaust valves	
Stem clearance in bushing	.002 - .004 in.
Permissible clearance in bushing (with new valve)	.007 in.
Valve seat angle	45°
Inlet valves	
Stem clearance in bushing	.002 - .004 in.
Permissible clearance in bushing (with new valve)	.005 in.
Valve seat angle	45°
Distance from top face of block to valve stem bushing (installed)	1 3/16 in.

Valve Timing (Zero Lift)

Exhaust opens	41° BBC
Exhaust closes	21° ATC
Inlet opens	15° BTC
Inlet closes	47° ABC

Valve Spring

Lbs. pressure	32.5 - 37.5
When compressed to	1 19/32 in.

Clutch

Latch spring adjustment (front face of locknut to rear face of gear)	1/4 - 5/16 in.
Distance from rear face of collar to front of external pinion shaft	2 3/8 in.

STARTING ENGINE
SPECIFICATIONS

ISSUED 12-63

Bore and stroke	3⅝ x 4
High idle	2900 RPM
Low idle	1100 RPM

Camshaft

Journal diameter (front)	2.1205 - 2.1215 in.
Journal diameter (rear)	1.3725 - 1.3735 in.
Bearing clearance	.0025 - .0045 in.
Permissible bearing clearance	.006 in.
End clearance	.003 - .011 in.
Permissible end clearance	.015 in.

Camshaft Idler Gear

Bearing journal diameter	2.1258 - 2.1268 in.
Bearing clearance	.0025 - .0065 in.

Clutch

Shaft diameter (rear)	.7470 - .7480 in.
Bearing bore (rear)	.7500 - .7510 in.
Bearing clearance	.0020 - .0040 in.
Permissible bearing clearance	.0060 in.

Connecting Rod

Connecting rod bearing clearance	.0032 - .0058 in.
Permissible bearing clearance	.009 in.
Bolt nut torque	36 lb. ft.
Center-to-center distance (Earlier)	8.499 - 8.501 in.
Center-to-center distance (Later)	6.999 - 7.001 in.
Bore in piston pin bearing [new rod assem. std. (Earlier)]	1.0950 - 1.0954 in.
Bore in piston pin bearing [for .007" oversize pins (Earlier)]	1.1020 - 1.1024 in.
Bore in piston pin bearing [new rod assem. std. (Later)]	.8597 - .8601 in.

Crankshaft

Main journal diameter	2.1240 - 2.1250 in.
Permissible main journal wear	.007 in.
Main bearing clearance	.0055 - .0095 in.
Permissible bearing clearance	.012 in.
End clearance, front main bearing	.005 - .010 in.
Permissible end clearance	.025 in.
Main bearing bolt torque	60 - 70 lb. ft.
Connecting rod journal diameter	1.998 - 1.999 in.
Permissible rod journal wear	.004 in.
Permissible out-of-round	.003 in.

Cylinder Head

Bolt torque (Earlier)	50 - 60 lb. ft.
Bolt torque (Later)	64 - 70 lb. ft.

Cylinder Bore

Diameter	3.628 - 3.629 in.
Cylinder bore wear limit (out-of-round)	.003 in.
Cylinder bore wear limit (taper)	.005 in.

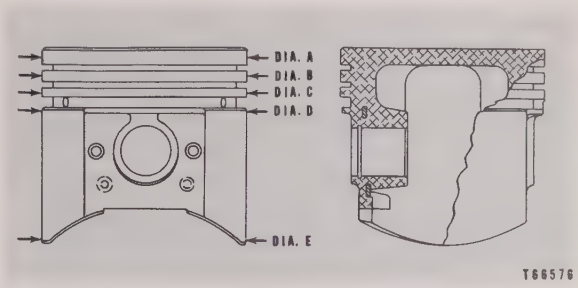

OVERSIZE PISTON DIMENSION
(Tapered skirt piston illustrated)
A, B, and C–Land diameters. D–Diameter at top of piston skirt. E–Diameter at bottom of piston skirt.

CYLINDER BORE AND PISTON DIMENSIONS (For tapered skirt pistons)			
Measurement	STANDARD (New)	.020" Oversize	.040" Oversize
Cylinder Diameter	3.628"-3.269"	3.648"-3.649"	3.668"-3.669"
Piston Land Diameter (A)	3.600"-3.604"	3.620"-3.624"	3.640"-3.644"
Piston Land Diameter (B)	3.608"-3.612"	3.628"-3.632"	3.648"-3.652"
Piston Land Diameter (C)	3.608"-3.612"	3.628"-3.632"	3.648"-3.652"
Skirt Taper	Diameter at (D) to be .0010"-.0015" less than diameter at (E).		

CYLINDER BORE AND PISTON DIMENSIONS [For straight skirt pistons (Earlier)]			
Measurement	.020" Oversize	.040" Oversize	.060" Oversize
Cylinder Diameter	3.648"-3.649"	3.668"-3.669"	3.688"-3.689"
Piston Land Diameter	3.618"-3.619"	3.638"-3.639"	3.658"-3.659"
Piston Skirt Diameter	3.640"-3.641"	3.660"-3.661"	3.680"-3.681"

Magneto

Cover screw torque	1.7 lb. ft.
Contact point gap	.015 in.
Ignition timing (Before top center)	25°
Impulse kickout speed	275 - 350 RPM
Impulse lag angle	11° - 14°

Oil Pump

Clearance between gears and end covers (total)	.001 - .003 in.
Shaft diameter	.4934 - .4940 in.
Bearing bore	.4962 - .4968 in.
Bearing clearance	.0022 - .0034 in.
Permissible bearing clearance	.006 in.

Pressure relief spring (Earlier):
- Free length ..... 1.250 in.
- Pounds force ..... 7.43 - 8.72
  - When compressed to ..... .825 in.

Pressure relief spring (Later):
- Free length ..... 1.250 in.
- Pounds force ..... 6.6 - 7.7
  - When compressed to ..... .875 in.

Oil pressure, minimum PSI at high idle 25

Pinion Mechanism

Pinion shaft assembly lock-nut torque ..... 290 - 310 lb. ft.

Pinion latch adjustment (Dimension C) ..... 3/16 in.

Pinion return spring:
- Pounds force ..... 58.2 - 68.4
  - When compressed to ..... 7.75 in.

Plunger spring:
- Pounds force ..... 27.9 - 32.7
  - When compressed to ..... 1.25 in.

Pistons (Earlier)

Bore in piston ..... 1.0939 - 1.0943 in.

Skirt clearance of new piston ..... .006 - .008 in.

Bore in piston (for .007" oversize pin) ..... 1.1016 - 1.1021 in.

Piston Pins

Clearance in rod bearing:
- Earlier ..... .0008 - .0013 in.
- Later ..... .0005 - .0011 in.

Permissible clearance between bearing and pin:
- Earlier ..... .003 in.
- Later ..... .0025 in.

Clearance in piston ..... .0005 - .0010 in.

Permissible clearance between piston and pin ..... .0025 in.

Piston Rings

Compression ring gap (measured in standard cylinder bore) ..... .009 - .023 in.

Oil ring gap (measured in standard cylinder bore) ..... .009 - .022 in.

Compression ring groove clearance ..... .0020 - .0036 in.

Oil ring groove clearance ..... .0010 - .0025 in.

Permissible groove clearance (new ring) compression and oil rings ..... .009 in.

Spark Plug

Gap ..... .030 in.

Torque ..... 30 lb. ft.

Starting Motor (12V — Delco Remy 1107213 and 1107741)

Brush spring tension (minimum) ..... 35 oz.

Rotation (viewing drive end) .. Counterclockwise

No load test:
- Volts 10.3
- Maximum Amps 75
- Approximate RPM 6900

Lock test:
- Volts 5.8
- Maximum Amps 435
- Minimum torque ..... 10.5 lb. ft.

Valves (Inlet and Exhaust)

Clearance:
- Hot ..... .008 in.
- Cold ..... .009 in.

Stem clearance in guide ..... .002 - .004 in.

Permissible valve clearance with new valve ..... .007 in.

Valve face angle ..... 44¼°

Valve seat angle ..... 45°

Valve Guides

Distance from top of block to valve guide ..... 1.188 in.

Valve Lifters

Lifter diameter ..... .6845 - .6850 in.

Bore diameter ..... .6865 - .6875 in.

Clearance ..... .0015 - .0030 in.

Permissible clearance ..... .0075 in.

Valve Spring

Free length ..... 1.969 in.

Pounds force ..... 32.5 - 37.5

When compressed to ..... 1.594 in.

Valve Timing

With valve clearances set .009" cold, dial indicator mounted above valve head, reading taken with valve .075" off its seat:

Earlier:
- Exhaust opening (before bottom center) ..... 14° 44′
- Exhaust closing (before top center) ..... 12° 33′
- Inlet opening (after top center) ..... 11° 16′
- Inlet closing (after bottom center) ..... 13° 27′

Later:
- Exhaust opening (before bottom center) ..... 27° 21′
- Exhaust closing (before top center) ..... 12° 10′
- Inlet opening (after top center) ..... 10° 39′
- Inlet closing (after bottom center) ..... 25° 50′

STARTING ENGINE

ISSUED 12-63

SPECIFICATIONS

Bore and stroke	3⅝ x 4
High idle	2900 RPM
Low idle	1100 RPM

Camshaft

Journal diameter (front)	2.1205 - 2.1215 in.
Journal diameter (rear)	1.3725 - 1.3735 in.
Bearing clearance	.0025 - .0045 in.
Permissible bearing clearance	.006 in.
End clearance	.003 - .011 in.
Permissible end clearance	.015 in.

Camshaft Idler Gear

Bearing journal diameter	2.1258 - 2.1268 in.
Bearing clearance	.0025 - .0065 in.

Clutch

Shaft diameter (rear)	.7470 - .7480 in.
Bearing bore (rear)	.7500 - .7510 in.
Bearing clearance	.0020 - .0040 in.
Permissible bearing clearance	.0060 in.

Connecting Rod

Connecting rod bearing clearance	.0032 - .0058 in.
Permissible bearing clearance	.009 in.
Bolt nut torque	36 lb. ft.
Center-to-center distance (Earlier)	8.499 - 8.501 in.
Center-to-center distance (Later)	6.999 - 7.001 in.
Bore in piston pin bearing [new rod assem. std. (Earlier)]	1.0950 - 1.0954 in.
Bore in piston pin bearing [for .007" oversize pins (Earlier)]	1.1020 - 1.1024 in.
Bore in piston pin bearing [new rod assem. std. (Later)]	.8597 - .8601 in.

Crankshaft

Main journal diameter	2.1240 - 2.1250 in.
Permissible main journal wear	.007 in.
Main bearing clearance	.0055 - .0095 in.
Permissible bearing clearance	.012 in.
End clearance, front main bearing	.005 - .010 in.
Permissible end clearance	.025 in.
Main bearing bolt torque	60 - 70 lb. ft.
Connecting rod journal diameter	1.998 - 1.999 in.
Permissible rod journal wear	.004 in.
Permissible out-of-round	.003 in.

Cylinder Head

Bolt torque (Earlier)	50 - 60 lb. ft.
Bolt torque (Later)	64 - 70 lb. ft.

Cylinder Bore

Diameter	3.628 - 3.629 in.
Cylinder bore wear limit (out-of-round)	.003 in.
Cylinder bore wear limit (taper)	.005 in.

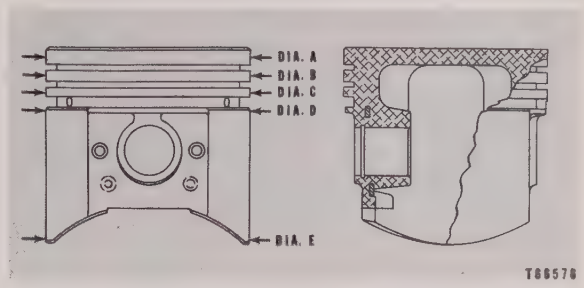

OVERSIZE PISTON DIMENSION
(Tapered skirt piston illustrated)
A, B, and C–Land diameters. D–Diameter at top of piston skirt. E–Diameter at bottom of piston skirt.

CYLINDER BORE AND PISTON DIMENSIONS (For tapered skirt pistons)			
Measurement	STANDARD (New)	.020" Oversize	.040" Oversize
Cylinder Diameter	3.628"-3.269"	3.648"-3.649"	3.668"-3.669"
Piston Land Diameter (A)	3.600"-3.604"	3.620"-3.624"	3.640"-3.644"
Piston Land Diameter (B)	3.608"-3.612"	3.628"-3.632"	3.648"-3.652"
Piston Land Diameter (C)	3.608"-3.612"	3.628"-3.632"	3.648"-3.652"
Skirt Taper	Diameter at (D) to be .0010"-.0015" less than diameter at (E).		

CYLINDER BORE AND PISTON DIMENSIONS [For straight skirt pistons (Earlier)]			
Measurement	.020" Oversize	.040" Oversize	.060" Oversize
Cylinder Diameter	3.648"-3.649"	3.668"-3.669"	3.688"-3.689"
Piston Land Diameter	3.618"-3.619"	3.638"-3.639"	3.658"-3.659"
Piston Skirt Diameter	3.640"-3.641"	3.660"-3.661"	3.680"-3.681"

Magneto

Cover screw torque	1.7 lb. ft.
Contact point gap	.015 in.
Ignition timing (Before top center)	25°
Impulse kickout speed	275 - 350 RPM
Impulse lag angle	11° - 14°

Oil Pump

Clearance between gears and end covers (total)	.001 - .003 in.
Shaft diameter	.4934 - .4940 in.
Bearing bore	.4962 - .4968 in.
Bearing clearance	.0022 - .0034 in.
Permissible bearing clearance	.006 in.

Pressure relief spring (Earlier):	
Free length	1.250 in.
Pounds force	7.43 - 8.72
When compressed to	.825 in.
Pressure relief spring (Later):	
Free length	1.250 in.
Pounds force	6.6 - 7.7
When compressed to	.875 in.
Oil pressure, minimum PSI at high idle	25

Pinion Mechanism

Pinion shaft assembly lock-nut torque	290 - 310 lb. ft.
Pinion latch adjustment (Dimension C)	3/16 in.
Pinion return spring:	
Pounds force	58.2 - 68.4
When compressed to	7.75 in.
Plunger spring:	
Pounds force	27.9 - 32.7
When compressed to	1.25 in.

Pistons (Earlier)

Bore in piston	1.0939 - 1.0943 in.
Skirt clearance of new piston	.006 - .008 in.
Bore in piston (for .007" oversize pin)	1.1016 - 1.1021 in.

Piston Pins

Clearance in rod bearing:	
Earlier	.0008 - .0013 in.
Later	.0005 - .0011 in.
Permissible clearance between bearing and pin:	
Earlier	.003 in.
Later	.0025 in.
Clearance in piston	.0005 - .0010 in.
Permissible clearance between piston and pin	.0025 in.

Piston Rings

Compression ring gap (measured in standard cylinder bore)	.009 - .023 in.
Oil ring gap (measured in standard cylinder bore)	.009 - .022 in.
Compression ring groove clearance	.0020 - .0036 in.
Oil ring groove clearance	.0010 - .0025 in.
Permissible groove clearance (new ring) compression and oil rings	.009 in.

Spark Plug

Gap	.030 in.
Torque	30 lb. ft.

Starting Motor (12V — Delco Remy 1107213 and 1107741)

Brush spring tension (minimum)	35 oz.
Rotation (viewing drive end)	Counterclockwise
No load test:	
Volts	10.3
Maximum Amps	75
Approximate RPM	6900
Lock test:	
Volts	5.8
Maximum Amps	435
Minimum torque	10.5 lb. ft.

Valves (Inlet and Exhaust)

Clearance:	
Hot	.008 in.
Cold	.009 in.
Stem clearance in guide	.002 - .004 in.
Permissible valve clearance with new valve	.007 in.
Valve face angle	44¼°
Valve seat angle	45°

Valve Guides

Distance from top of block to valve guide	1.188 in.

Valve Lifters

Lifter diameter	.6845 - .6850 in.
Bore diameter	.6865 - .6875 in.
Clearance	.0015 - .0030 in.
Permissible clearance	.0075 in.

Valve Spring

Free length	1.969 in.
Pounds force	32.5 - 37.5
When compressed to	1.594 in.

Valve Timing

With valve clearances set .009" cold, dial indicator mounted above valve head, reading taken with valve .075" off its seat:

Earlier:	
Exhaust opening (before bottom center)	14° 44′
Exhaust closing (before top center)	12° 33′
Inlet opening (after top center)	11° 16′
Inlet closing (after bottom center)	13° 27′
Later:	
Exhaust opening (before bottom center)	27° 21′
Exhaust closing (before top center)	12° 10′
Inlet opening (after top center)	10° 39′
Inlet closing (after bottom center)	25° 50′

Operation

The starting engine is mounted on the left side of the diesel engine cylinder block. Most repair work can be done more readily by first removing the starting engine from the diesel engine.

The starting engine is gasoline-operated, equipped with an updraft carburetor.

The engine speed is maintained at a constant rate by a governor arrangement. Tension of the governor spring **(4)** through the control lever **(8)** and the linkage **(10)** tends to open the carburetor throttle and operate the engine at high speed. Centrifugal force built up the governor weights **(2)**, which are driven by the gear **(6)**, causes the weights to swing outward, exerting pressure against the sliding sleeve assembly **(9)**. This force, transmitted through the fork **(3)** to the lever **(8)**, opposes the tension of the spring **(4)**, and tends to reduce engine speed. The reaction between these two forces maintains a constant engine speed, despite varying load conditions. Engine high idle speed is set by varying the governor spring tension with the adjusting nut **(5)**.

The magneto **(1)** is driven by the crankshaft gear **(15)** through the mangeto trunnion assembly **(11)** and magneto drive gear **(13)**.

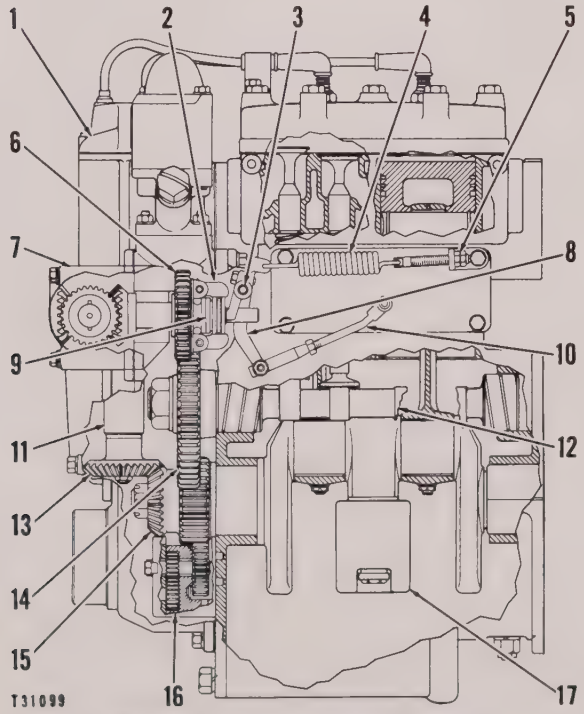

STARTING ENGINE NOMENCLATURE

1–Magneto. 2–Weight. 3–Governor control fork. 4–Governor spring. 5–Adjusting nut. 6–Governor drive gear. 7–Hand crank mechanism. 8–Control lever. 9–Sliding sleeve assembly. 10–Linkage. 11–Trunnion assembly. 12–Camshaft. 13–Magneto drive gear. 14–Camshaft gear. 15–Crankshaft gear. 16–Oil pump. 17–Crankshaft.

The hand crank mechanism **(7)** provides a method for manual starting of the engine.

The engine valve mechanism is operated off the camshaft **(12)**, which is driven by the camshaft gear **(14)**, which is in mesh with the crankshaft gear.

The oil pump **(16)** provides a pressure oil system for the engine.

The crankshaft **(17)** has both its connecting rod journals in line, which makes possible a power stroke on one of the two cylinders at each revolution of the crankshaft. This provides for easy starting and an even power flow.

The hollow-type flywheel **(19)** is mounted at the rear of the crankshaft and is enclosed in an individual housing along with the wet disc-type clutch **(18)**. The clutch discs are engaged with internal splines of the flywheel, and are engaged and disengaged manually by the dogs and collar **(22)**. The clutch control lever is mounted on top of the clutch and flywheel housing. Oil for the clutch is obtained from the engine oil pan through the rear main bearing.

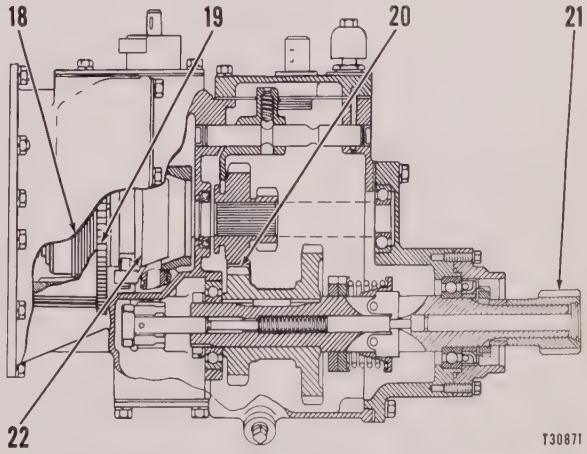

STARTING ENGINE CLUTCH AND TRANSMISSION

18–Clutch. 19–Flywheel. 20–Transmission. 21–Pinion. 22–Clutch collar.

Power from the engine is transmitted by the clutch through a two-speed transmission **(20)** and a starting pinion arrangement **(21)**, attached to the clutch and flywheel housing and driven by a gear on the clutch shaft. See the topic, STARTING MECHANISM, for information on the starting pinion arrangement.

The starting engine cooling system is combined with the cooling system of the diesel engine. See the topic, COOLING SYSTEM, of the diesel engine for the flow diagram and description of the combined cooling system.

Operation

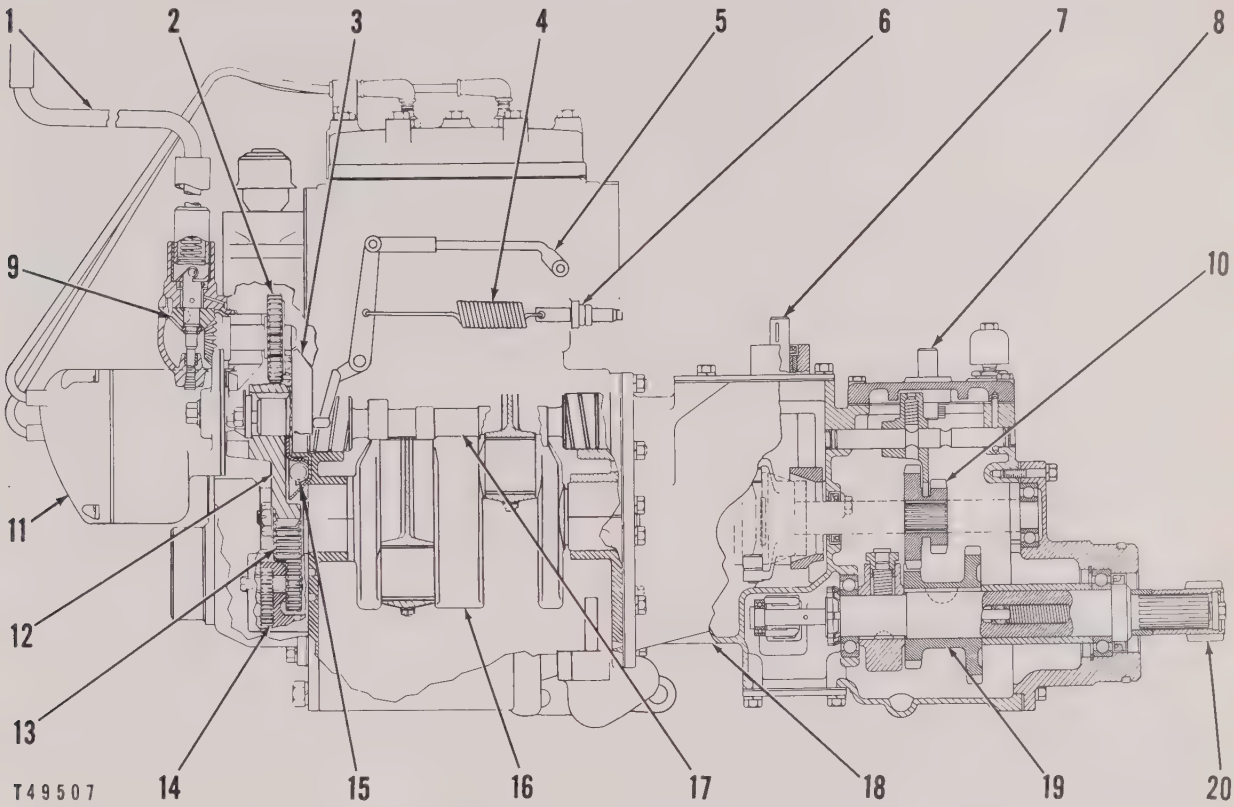

STARTING ENGINE NOMENCLATURE

1–Hand crank.
2–Hand crank mechanism drive gear.
3–Governor sliding ramp.
4–Governor spring.
5–Carburetor linkage.
6–High idle adjusting nut.
7–Starting pinion engaging shaft.
8–Transmission speed selector shaft.
9–Hand crank mechanism bevel gear.
10–Transmission sliding gear.
11–Magneto.
12–Camshaft gear.
13–Crankshaft gear.
14–Starting engine oil pump.
15–Governor ball weight.
16–Crankshaft.
17–Camshaft.
18–Clutch and transmission housing.
19–Transmission drive gear.
20–Starting engine pinion.

The starting engine is mounted on the left side of the diesel engine block. The engine is a two cylinder, four cycle, gasoline-operated type.

The starting engine cooling system is combined with the cooling system of the diesel engine. See the topic, COOLING SYSTEM, of the diesel engine for the flow diagram and description of the combined cooling system.

The starting engine lubrication system is separate from the diesel engine. See the topic, LUBRICATION SYSTEM, for the flow diagram.

Removal

1. Drain the diesel engine cooling system. This will also drain the coolant from the starting engine.

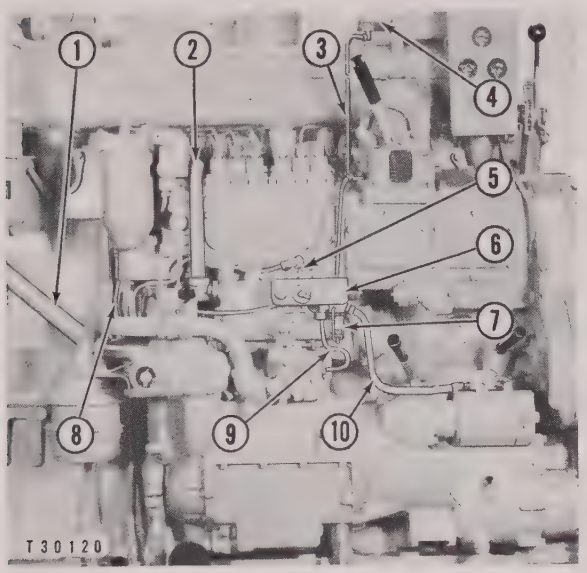

PREPARING TO REMOVE STARTING ENGINE
1–Exhaust pipe. 2–Water line. 3–Fuel tube. 4–Gas tank. 5–Spark plug. 6–Starting switch and sediment bowl bracket. 7–Sediment bowl. 8–Oil lubrication line. 9–Fuel tube. 10–Wires.

2. Drain the oil from the compartments of the starting engine.
3. Remove the water line **(2)** and the exhaust pipe **(1)**.

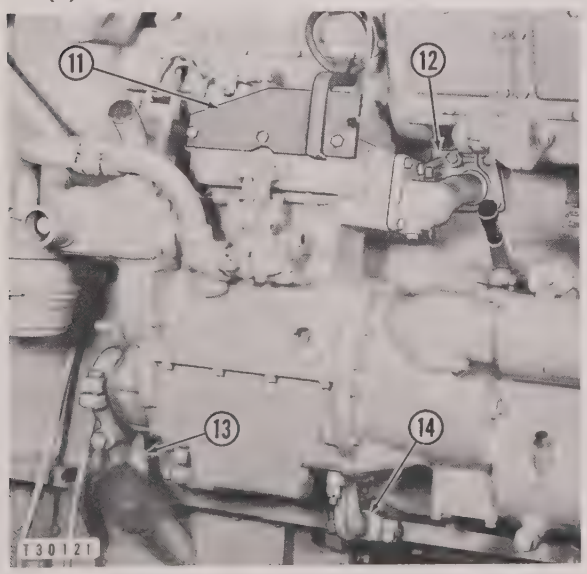

PREPARING TO REMOVE THE STARTING ENGINE
11–Lifting bracket. 12–Support bracket. 13–Support bracket. 14–Support bracket.

4. Drain the gasoline tank **(4)** and disconnect the fuel tube **(3)**.
5. Disconnect the fuel tube **(9)** at the carburetor, and the wires **(10)** at the starting motor switch and magneto.
6. Remove the starting switch bracket **(6)**, sediment bowl **(7)** and wires as an assembly.
7. Remove the spark plug **(5)** and disconnect the common oil lubrication line **(8)**.
8. Install the starting engine lifting bracket **(11)**, as illustrated and attach a suitable hoist.
9. Remove the bolts which secure the support brackets **(12)**, **(13)** and **(14)** to the diesel engine block and remove the starting engine.

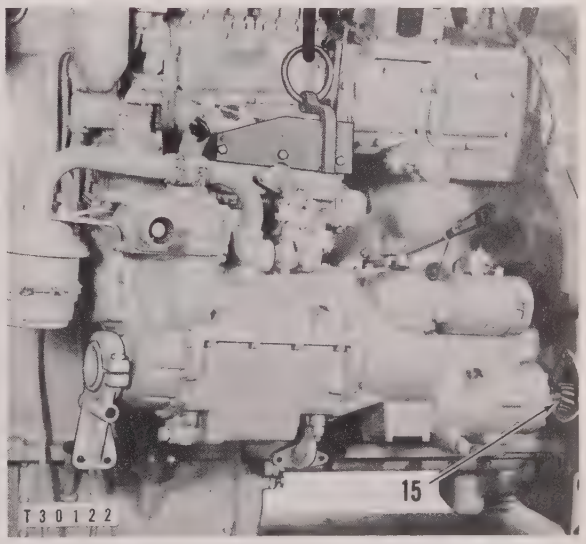

REMOVING THE STARTING ENGINE
15–Pinion.

CAUTION

Move the starting engine forward carefully to prevent the pinion **(15)** from being damaged. The oil from the starting engine returns to the diesel engine through a hole behind the starting engine support bracket **(14)**. This hole in the diesel engine block should be covered to prevent the entrance of dirt after the starting engine is removed.

10. Install the starting engine in the reverse order of removal.

STARTING ENGINE
LUBRICATION SYSTEM

FLOW OF LUBRICATING OIL
(Common Oil System)

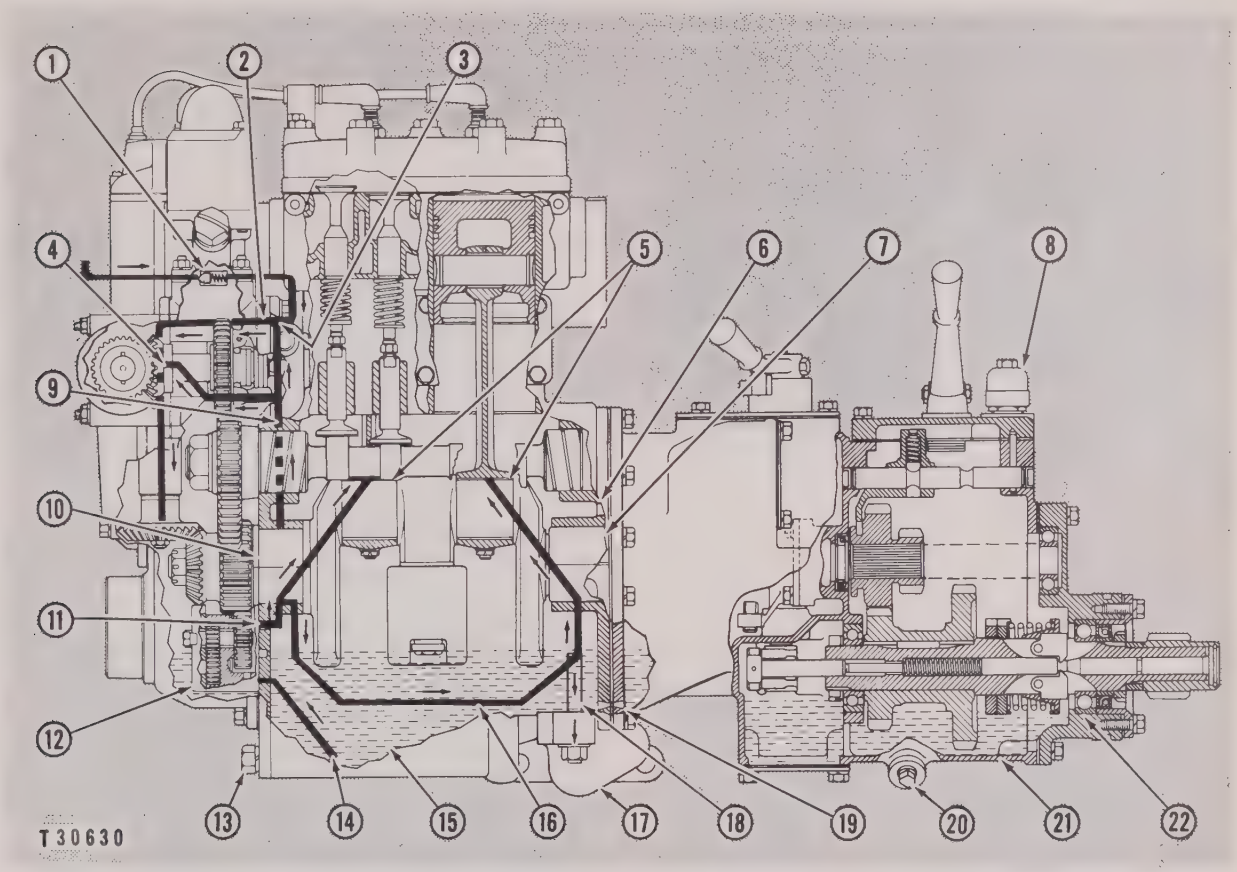

LUBRICATION SYSTEM - SCHEMATIC
1–Check valve. 2–Horizontal passage. 3–Oil inlet. 4–Horizontal passage. 5–Connecting rod bearings. 6–Oil return passage. 7–Rear main bearing. 8–Breather. 9–Vertical passage. 10–Front main bearing. 11–Oil pump outlet. 12–Oil pump. 13–Plug. 14–Drilled passage. 15–Sump. 16–Tube. 17–Rear support. 18–Standpipe. 19–Passage. 20–Plug. 21–Transmission. 22–Pinion bearing.

This system supplies pressure oil to the starting engine bearings when either the starting engine or the diesel engine is operating.

When the diesel engine is operating, oil is directed from the diesel engine lubricating system to the starting engine system, entering the starting engine block at the oil inlet **(3)** near the front cover. Oil level in the starting engine sump is maintained by the standpipe **(18)** cast in the oil pan. Excess oil is drained back to the diesel engine by way of a drilled and cored passage in the starting engine rear support **(17)**. With only the starting engine operating, lubrication is in the normal manner. A check valve **(1)** prevents oil from being pumped into the diesel engine by closing off the supply line from the diesel engine.

The oil pump **(12)** draws oil from the sump **(15)** through the drilled passage **(14)** in the oil pan and discharges it through the oil pump outlet **(11)** to lubricate the front main bearing **(10)** and the connecting rod bearings **(5)**.

Pressure oil flows from the front main bearing **(10)** through the tube **(16)** to lubricate the rear main bearing **(7)**. Pressure oil from the front main bearing also flows through passages **(9)**, **(4)** and **(2)** in the block and timing gear housing to lubricate the hand crank drive gear and governor drive shaft bearing. The governor weights, sliding sleeve and drive gear are splash-lubricated by oil thrown from the crankshaft and camshaft gears.

The camshaft bearings are lubricated by splash oil carried by oil grooves on the bearing surfaces.

Removal of the plug **(13)** allows oil to drain from the starting engine oil pan and also from the clutch housing through a connecting passage **(19)**.

Oil enters the flywheel and clutch compartment past the rear main bearing and also through the connecting passage between the compartment and oil pan. The clutch housing is designed so when the engine is operating the flywheel acts as a slinger, lubricating the clutch and throwing oil into a pocket at the top of the housing. Oil thrown into the pocket flows by gravity through the passage **(6)** back to the pan, thus insuring oil at the pump even when the engine is operating on an incline.

The starter pinion bearing **(22)** and transmission **(21)** are lubricated independently. Oil is added by removing the breather **(8)**. The oil level is checked with the oil level gauge on the side of the transmission housing. Removal of the plug **(20)** drains the oil from the transmission housing.

OIL PAN

Oil Pan Removal

To remove the oil pan from the cylinder block, it is first necessary to remove the clutch and starter pinion drive assemblies and the timing gear housing. See the topics, CLUTCH REMOVAL, STARTER PINION REMOVAL AND DISASSEMBLY, and TIMING GEAR HOUSING REMOVAL.

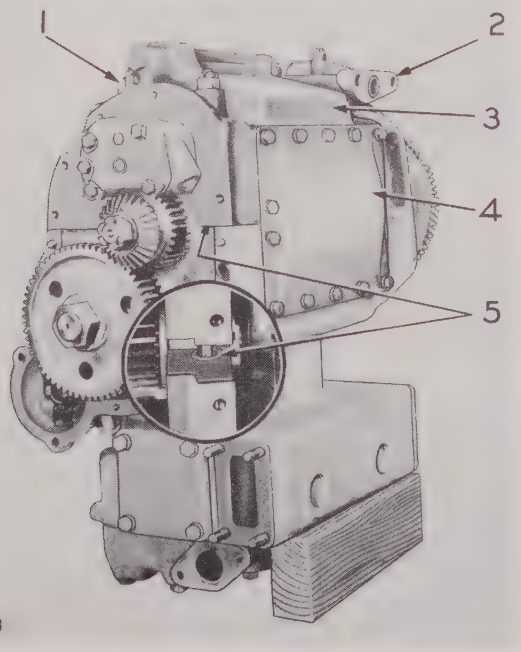

OIL PAN REMOVAL
1–Nut. 2–Engine rear support. 3–Pan. 4–Inspection cover. 5–Spacer washer.

With these parts removed, place the engine in position so it is supported on its head as shown.

1. Remove the inspection cover **(4)**.
2. Remove the nuts **(1)** and engine rear support **(2)**.
3. Remove all the bolts holding the pan **(3)** to the engine block.
4. Carefully lift the pan off the mounting studs to prevent damaging the engine main bearings.

NOTE

A spacer washer **(5)** is located on each of the oil pan studs between the pan and cylinder block. The pan gasket has holes large enough to pass over these washers to form a good seal. The spacer washers **(5)** are used to prevent crushing the main bearing and must be in place before installing the oil pan on the cylinder block. Be sure the holes in the gasket are centrally located around the spacer washers to prevent shearing away part of the gasket, which would result in oil leakage around the pan studs.

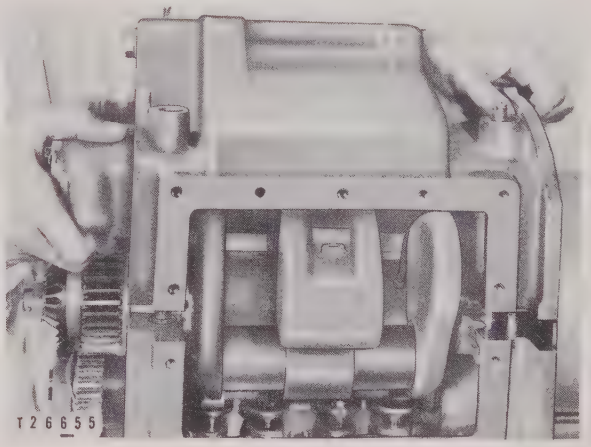

LIFTING THE OIL PAN FROM THE BLOCK

Sump Screen Removal

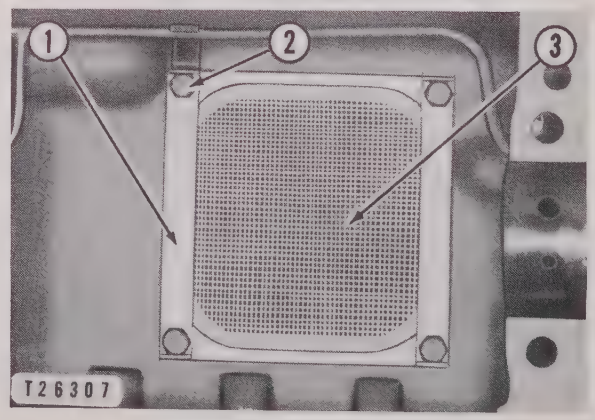

SUMP SCREEN REMOVAL
1–Lock. 2–Bolt. 3–Screen.

Bend the locks **(1)** and remove the bolts **(2)** and the screen **(3)**. Clean the pan and make sure all passages are open.

OIL PUMP

Oil Pump Removal

The oil pump **(2)** is mounted on the front of oil pan **(5)** and inside the timing gear housing. It is driven directly from crankshaft gear **(1)**, and has two dowels **(6)** and four bolts to secure it to the pan.

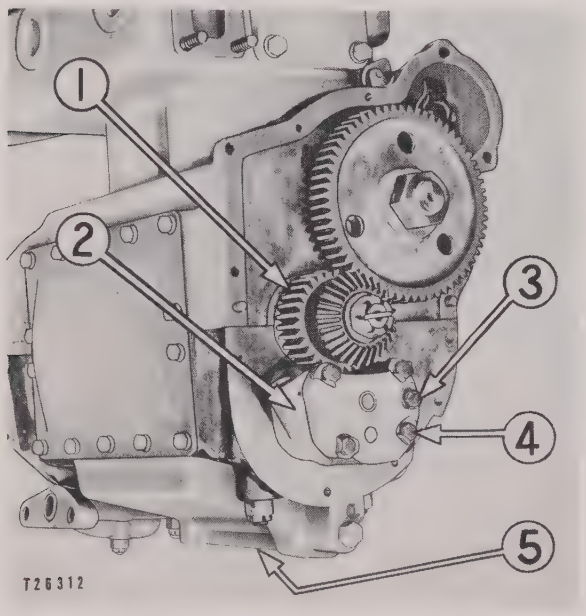

PREPARING TO REMOVE OIL PUMP
1–Crankshaft gear. 2–Oil pump. 3–Bolt. 4–Bolt. 5–Oil pan.

Remove the bolts **(4)** and remove the oil pump from the engine pan. The bolt **(3)** is to be removed only when the pump is to be disassembled.

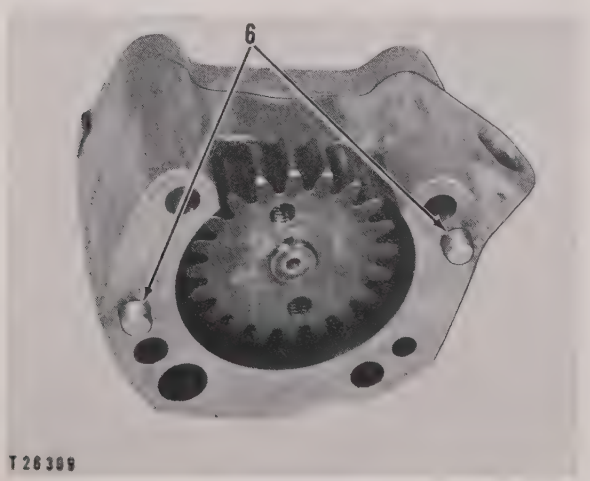

OIL PUMP REMOVED
6–Dowels.

Oil Pump Disassembly

1. Remove the bolt which holds the cover **(2)** to the pump body **(1)**.
2. Separate the cover from the body.
3. Drive the tapered pin from the pump drive shaft and gear as shown.

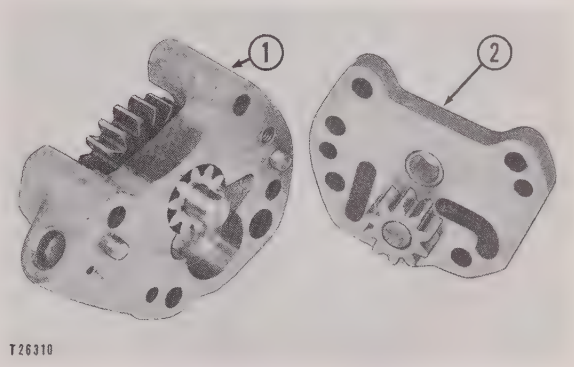

PUMP COVER REMOVAL
1–Pump body. 2–Cover.

4. Inspect all gears, bushings and shaft before assembly.

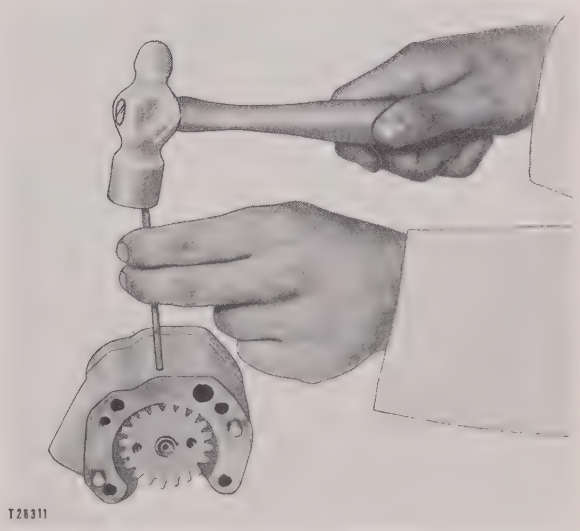

REMOVAL OF DRIVE SHAFT AND GEAR PIN

Pressure Regulating Valve

The oil pump contains a pressure regulating valve which is located within the pump body **(4)**.

The pressure setting is predetermined and requires no adjustment, since the pressure setting is maintained by spring tension.

The valve consists of the ball **(3)**, spring **(2)** and plug **(1)**. A ground seat in the pump body provides a seating surface for the ball **(3)**.

To remove the valve spring and ball, pry the plug (1) from the pump body and slide the spring and ball from the body.

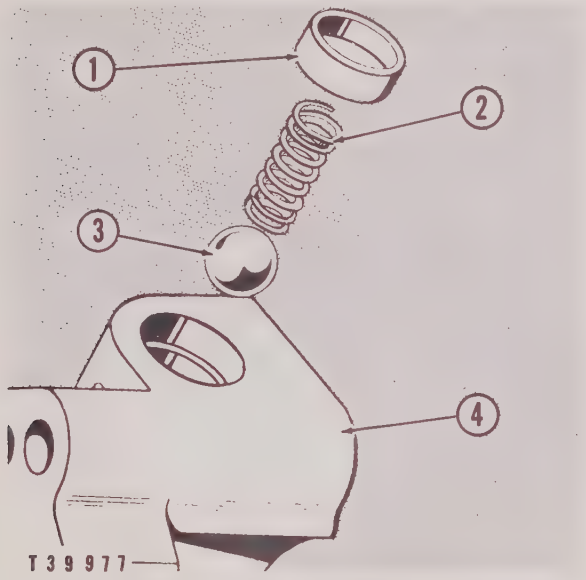

PRESSURE REGULATING VALVE
1–Plug. 2–Spring. 3–Ball. 4–Pump body.

When installing the valve assembly, a new plug must be placed into the pump body with the open side of the plug turned outward. Drive the plug into the body until the outer edge of the plug is flush with the pump body.

Lubrication System

FLOW OF LUBRICATING OIL

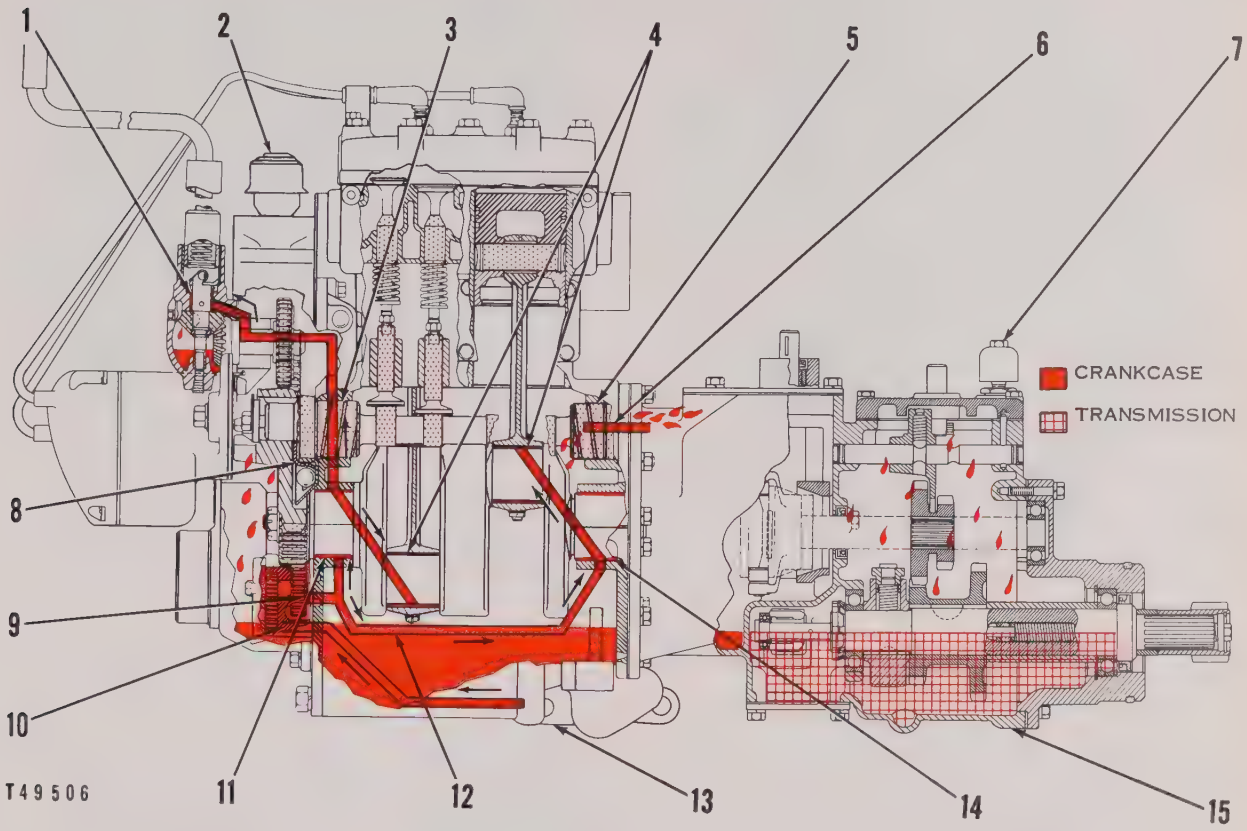

LUBRICATION SYSTEM

1–Hand crank mechanism bearing.
2–Crankcase breather.
3–Camshaft front bearing bore.
4–Connecting rod bearings.
5–Camshaft rear bearing bore.
6–Oil return trough.
7–Transmission breather.
8–Governor.
9–Oil pump outlet.
10–Oil pump inlet.
11–Crankshaft front bearing.
12–Oil tube.
13–Engine rear support.
14–Crankshaft rear bearing.
15–Transmission housing.

OIL PAN

Oil Pan Removal

To remove the oil pan from the cylinder block, it is first necessary to remove the clutch and starter pinion drive assemblies and the timing gear housing. See the topics, CLUTCH REMOVAL, STARTER PINION REMOVAL AND DISASSEMBLY, and TIMING GEAR HOUSING REMOVAL.

1. With these parts removed, place the engine in position so it is supported on its head as shown.
2. Carefully lift the pan off the mounting studs to prevent damaging the engine main bearings.

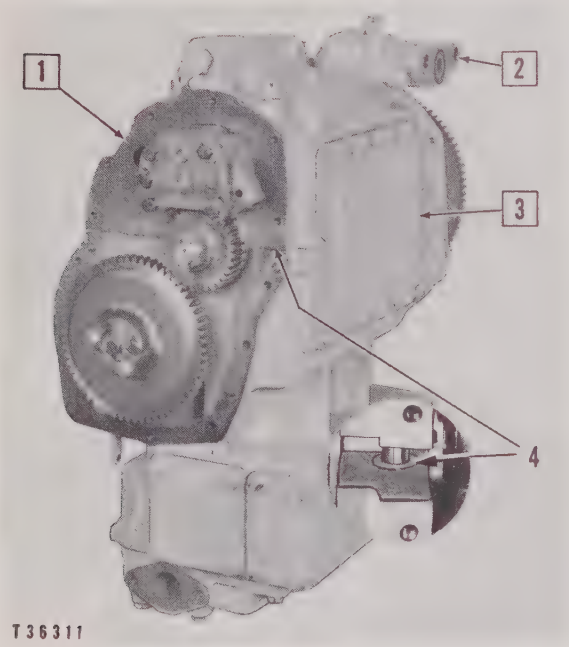

OIL PAN REMOVAL

☐ Remove

1–Oil pan. 2–Engine rear support. 3–Inspection cover. 4–Spacer washer.

NOTE

A spacer washer **(4)** is located on each of the oil pan studs between the pan and cylinder block. The pan gasket has holes large enough to pass over these washers to form a good seal. The spacer washers are used to prevent crushing the main bearing and must be in place before installing the oil pan on the cylinder block. Be sure the holes in the gasket are centrally located around the spacer washers to prevent shearing away part of the gasket, which would result in oil leakage around the pan studs.

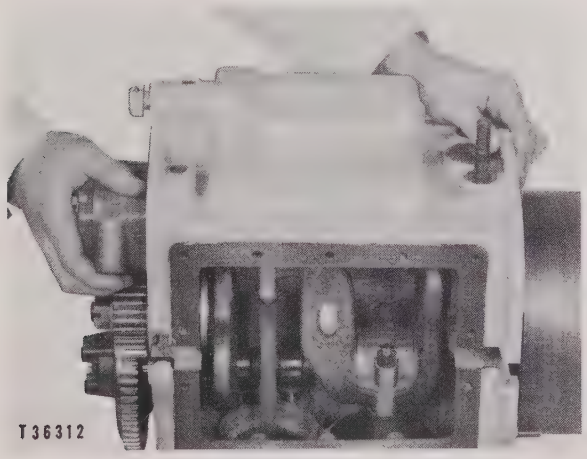

LIFTING THE OIL PAN FROM THE BLOCK

Sump Screen Removal

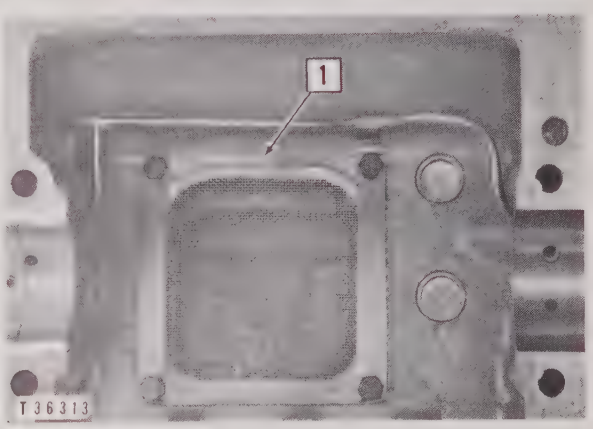

SUMP SCREEN REMOVAL

☐ Remove

1–Screen.

Clean the pan and make sure all passages are open.

OIL PUMP

The oil pump is mounted on the front of the oil pan and inside the timing gear housing. It is driven directly from the crankshaft gear.

Oil Pump Removal

The bolt **(2)** is to be removed only when the pump is to be disassembled.

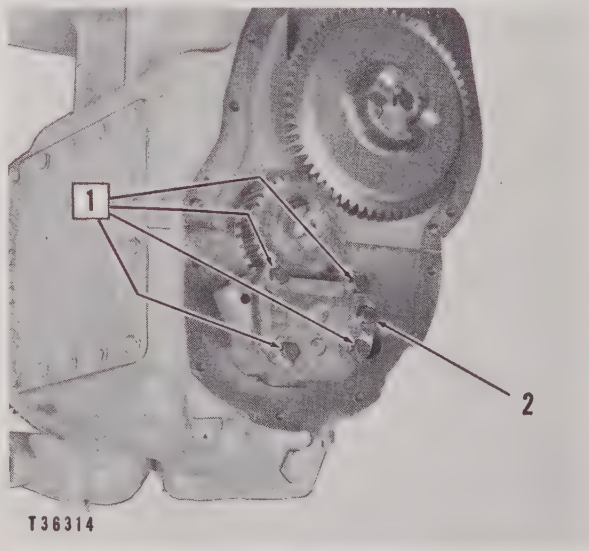

OIL PUMP REMOVAL

☐ Remove

1–Pump mounting bolts. 2–Pump cover bolt.

Oil Pump Disassembly

1. Remove the bolt which holds the cover **(2)** to the pump body **(1)**.
2. Separate the cover from the body.
3. Drive the tapered pin from the pump drive shaft and gear as shown.

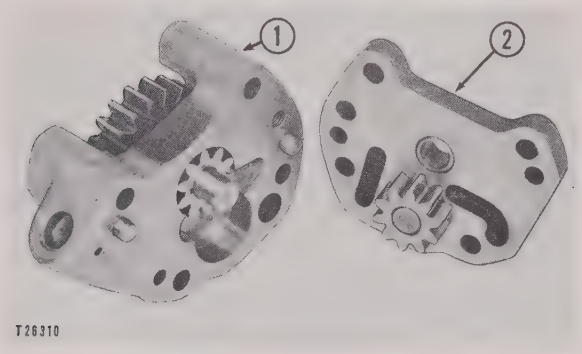

PUMP COVER REMOVAL
1–Pump body. 2–Cover.

4. Inspect all gears, bearings and shafts before assembly.

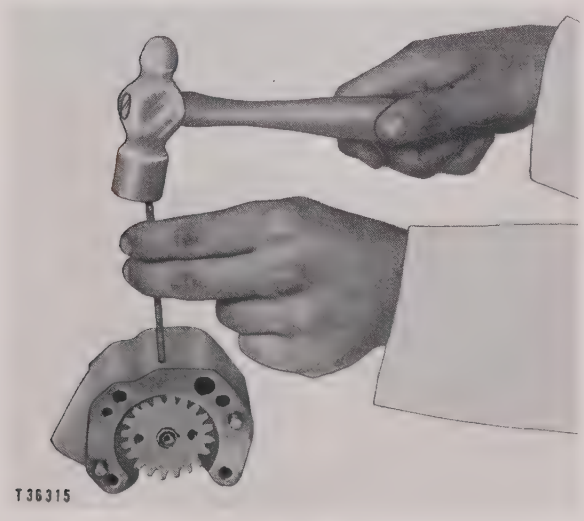

REMOVAL OF DRIVE SHAFT AND GEAR PIN

Pressure Regulating Valve

The oil pump contains a pressure regulating valve which is located within the pump body **(4)**.

The pressure setting is predetermined and requires no adjustment, since the pressure setting is maintained by spring tension.

The valve consists of the ball **(3)**, spring **(2)** and plug **(1)**. A ground seat in the pump body provides a seating surface for the ball **(3)**.

To remove the valve spring and ball, pry the plug **(1)** from the pump body and slide the spring and ball from the body.

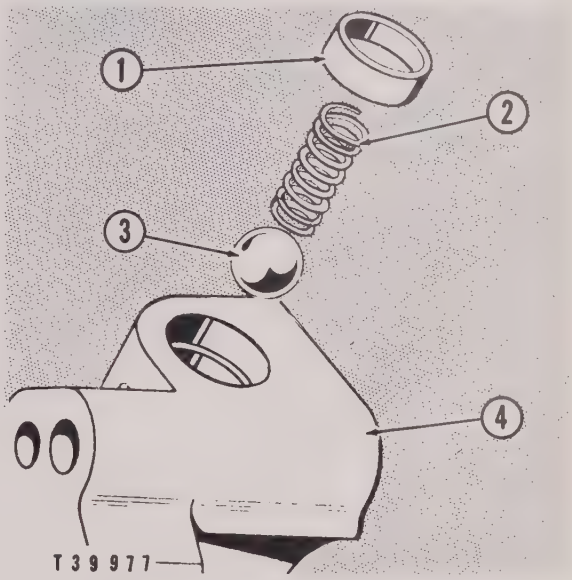

PRESSURE REGULATING VALVE
1–Plug. 2–Spring. 3–Ball. 4–Pump body.

When installing the valve assembly, a new plug must be placed into the pump body with the open side of the plug turned outward. Drive the plug into the body until the outer edge of the plug is flush with the pump body.

Fuel System

The fuel system consists of the fuel tank **(2)**, fuel filter **(3)**, fuel line **(1)** and carburetor **(4)**.

The fuel flows from the fuel tank **(2)** to the carburetor **(4)** through the fuel line **(1)**. It is mixed with the proper proportions of air in the carburetor and delivered into the inlet manifold, past the inlet valves and into the cylinders where it is burned.

The fuel filter **(3)** contains a manually operated shutoff valve to stop the flow of fuel to the carburetor when the engine is not operating.

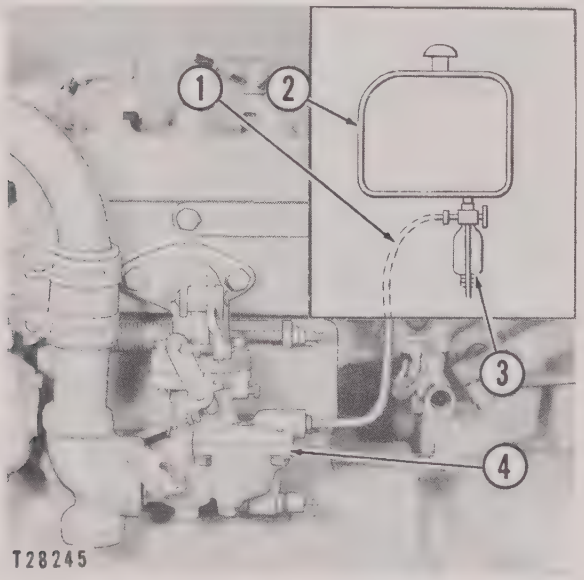

FUEL SYSTEM
1–Fuel line. 2–Fuel tank. 3–Fuel filter. 4–Carburetor.

CARBURETOR

An up-draft carburetor is used on this starting engine. The carburetor is sealed, protecting all the internal parts from dirt and moisture.

Operation

Fuel enters the carburetor at the inlet port **(7)** and is directed through the fuel valve **(9)** to the bowl **(12)**. The level of fuel in the bowl is regulated by the float assembly **(11)**.

NOTE

The fuel valve **(9)** does not open and close intermittently, but assumes an opening sufficient to maintain a proper level in the bowl, for the demand of the engine.

Fuel for idling enters the main jet **(13)** from the bowl **(12)**, is directed through the port **(14)**, and enters the idle jet **(1)**. The fuel mixes with air in the air passage **(3)**. Air for the fuel mixture enters the air passage **(3)** from a port behind the venturi **(8)**, and through the port **(4)**. The mixture flows up the passage around the needle of the idle adjusting screw **(2)**, through the port **(5)**, and to the carburetor air stream. As the throttle plate **(6)** is opened for faster idling speeds, the edge of the throttle plate **(6)**

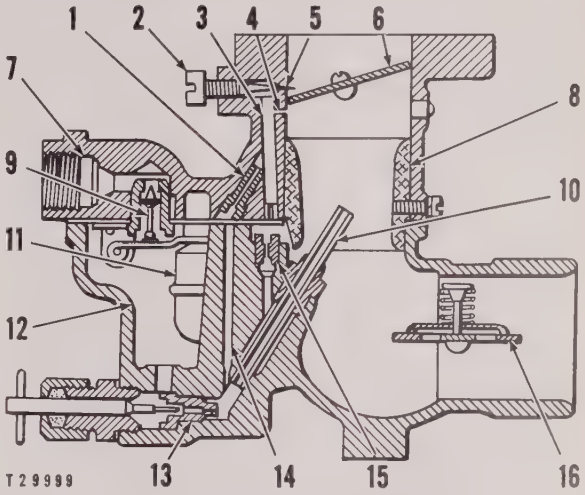

CARBURETOR OPERATION
1–Idle jet. 2–Idle adjusting screw. 3–Air passage. 4–Port. 5–Port. 6–Throttle plate. 7–Inlet port. 8–Venturi. 9–Fuel valve. 10–Discharge tube assembly. 11–Float assembly. 12–Bowl. 13–Main jet. 14–Port. 15–Well vent jet. 16–Choke plate.

passes the port **(4)**. The fuel mixture then flows through the port **(4)** to the air stream.

During the high speed operation, the fuel flows from the bowl **(12)** to the main jet **(13)**. Air flows through the well vent jet **(15)** and mixes with the fuel in the main discharge tube assembly **(10)**. This mixture then flows through the tube to the air stream of the carburetor.

During the choking operation, the choke plate **(16)** closes the main air inlet passage of the carburetor. This action causes more fuel to flow from the main jet **(13)** to the main air passage.

Removal

1. Close the shutoff valve on the fuel filter and remove the fuel line **(4)**.
2. Remove the plug **(3)** and drain the fuel from the bowl.
3. Remove the bolts **(2)** which secure the carburetor to the elbow.

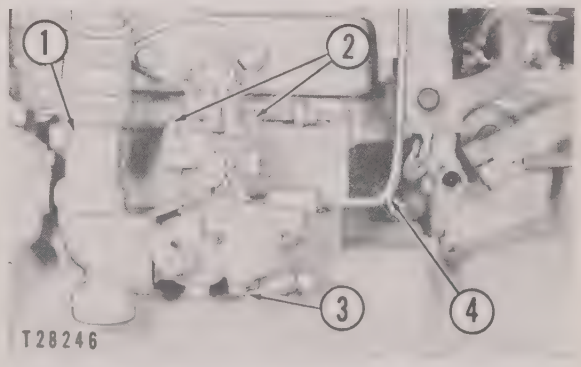

PREPARING TO REMOVE CARBURETOR
1–Air cleaner pipe. 2–Bolts. 3–Plug. 4–Fuel inlet line.

4. Remove the carburetor from the air cleaner pipe **(1)**.

Disassembly and Assembly of Carburetor

Special service tools mentioned by part number are available from Zenith Carburetor Division, Bendix Aviation Corp., Detroit, Michigan.

NOTE

Do not remove the round aluminum disc riveted to the top of the carburetor bowl cover. This disc specifies the assembly outline number to which the carburetor was originally built.

Body and Adjusting Screws

1. Remove the four screws securing the throttle body assembly **(4)** to the bowl assembly **(5)**.
2. Raise the throttle body slightly and loosen the gasket from the bowl assembly so the throttle body can be lifted off without damaging the floats.

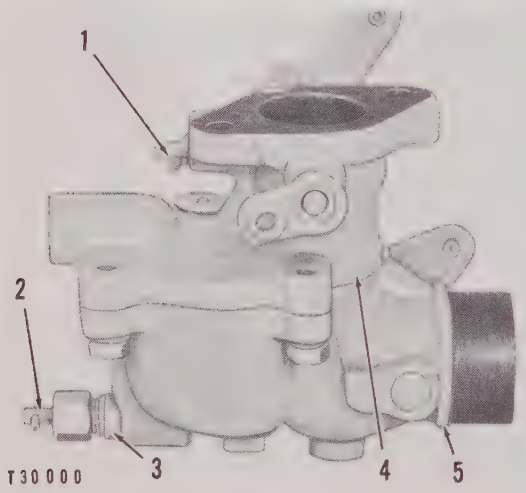

CARBURETOR DISASSEMBLY
1–Idle adjusting screw. 2–Main jet adjusting needle. 3–Fitting. 4–Throttle body assembly. 5–Bowl assembly.

3. Remove the idle adjusting screw **(1)** and spring.
4. Remove the main jet adjusting needle **(2)** and the fitting **(3)**.

Removing Floats, Idle Jet, Well Jet and Venturi

1. Remove the float axle **(5)** using a screwdriver to push the axle from the slotted end of the bracket **(6)**, and the fingers to remove it the rest of the way.
2. Remove the float assembly **(1)**.
3. Remove the fuel valve needle **(7)**.
4. Remove the fuel valve seat **(10)** and gasket using the C161-82 Service Tool.
5. Remove the gasket **(8)**.
6. The well vent jet **(4)** can be removed using a screwdriver with a 3/16 inch blade.

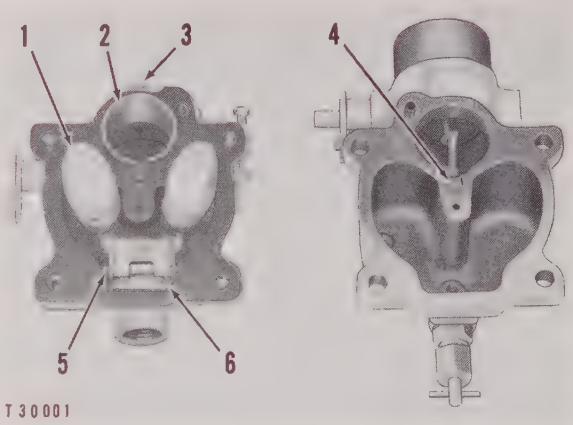

CARBURETOR DISASSEMBLY
1–Float assembly. 2–Venturi. 3–Screw. 4–Well vent jet. 5–Float axle. 6–Bracket.

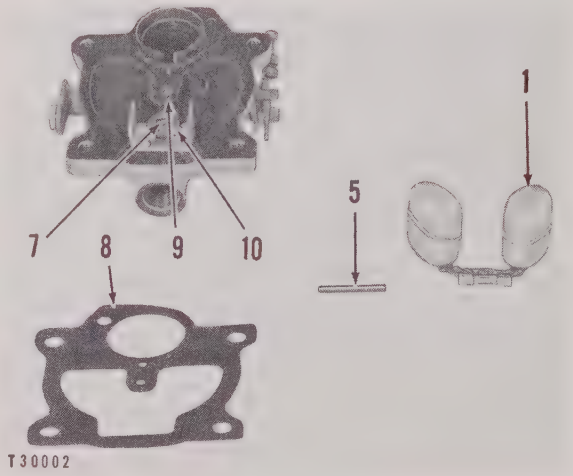

CARBURETOR DISASSEMBLY
1–Float assembly. 5–Float axle. 7–Fuel valve needle. 8–Gasket. 9–Idle jet. 10–Fuel valve seat.

7. The idle jet **(9)** can be removed with the same screwdriver used on the well vent jet.
8. Remove the screw **(3)**, and remove the venturi **(2)** from the throttle body assembly.

Removing Discharge Tube Assembly and Main Jet

Remove the main discharge tube assembly **(1)** and gasket from the bowl assembly.

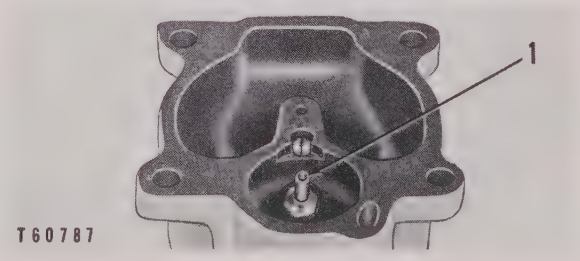

CARBURETOR DISASSEMBLY
1–Main discharge tube assembly.

Remove the main jet **(2)** from the bottom of the bowl assembly where the main jet adjusting needle and fitting were removed previously.

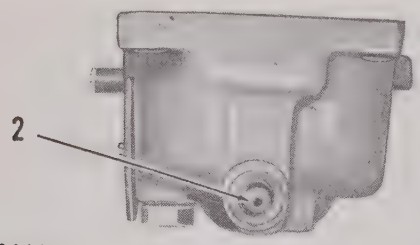

CARBURETOR DISASSEMBLY
2–Main jet.

Throttle Plate Assembly Removal

The throttle plate **(1)** can be removed by melting the solder from the two screws **(4)** securing it to the throttle shaft and removing the screws. After removing the throttle plate drive out the pin **(2)** securing the lever **(3)** to the throttle shaft. Remove the throttle shaft from the body. The throttle shaft is supported in the body by two bearings and has a seal at each end.

The throttle plate **(1)** is installed in the throttle body assembly in such a position that the idle adjusting port is above the throttle plate and the port leading from the metering well is directly under the throttle plate. These two ports are drilled after the throttle plate has been installed, and must remain in the same relative position in relation to the throttle plate. For this reason, the following procedure in removing and replacing the throttle plate must be closely followed.

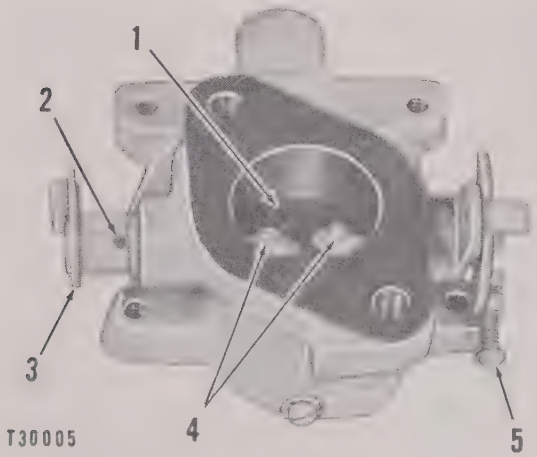

REMOVING THROTTLE PLATE ASSEMBLY
1–Throttle plate. 2–Pin. 3–Lever. 4–Screws. 5–Throttle stop screw.

Before removing the throttle plate, unscrew the throttle stop screw **(5)** to permit complete closing of the throttle plate. Hold the throttle in the tightly closed position and mark the throttle body along the top of the throttle plate with a steel scriber. This scribed line will be used as a guide when replacing the throttle plate or installing a new shaft. Should the new plate show a noticeable variation from the old one, select another new plate to get one that fits very closely to the scribed line when installed.

Choke Plate Assembly Removal

The choke plate **(2)** has a spring loaded poppet valve **(3)** built into it. This poppet valve is opened by the stream of air after the engine starts. This permits the engine to operate without flooding until the choke control rod can be pushed in.

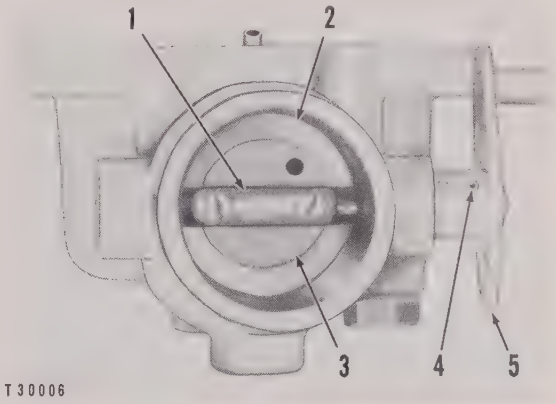

CARBURETOR CHOKE PLATE DISASSEMBLY
1–Shaft. 2–Choke plate. 3–Poppet valve. 4–Tapered pin. 5–Control lever.

The choke plate can be removed by melting the solder from the two screws securing it to the shaft **(1)** and removing the screws. The shaft **(1)** can be removed by driving out the tapered pin **(4)** which secures the control lever **(5)** to the shaft. The shaft is supported by two bearings and has a seal at each end of the shaft. These bearings present the same problems as the throttle shaft bearings. See the topic, THROTTLE PLATE ASSEMBLY REMOVAL.

Choke Plate and Throttle Plate Assembly

Install the choke plate in the correct position, properly centering it before tightening and soldering the screws. The choke plate should be held wide open while installing the lever. Check the operation to make sure the choke plate closes and opens fully.

Install the throttle shaft and throttle plate. See the topic, THROTTLE PLATE ASSEMBLY REMOVAL. Install the stop lever assembly on the throttle shaft. When the throttle plate is straight up and down in the barrel, the stop lever should be against the stop pin. If the shaft is new, it will be necessary to drill a new hole in the shaft. Pin the stop lever to the shaft with a taper pin. Tighten and solder the two screws.

Replacing Jets

Replace the main jet using a new gasket. Install the discharge tube assembly along with a new gasket. Install the main jet adjusting needle assembly. Replace the well vent. No gasket is necessary. Install the idle jet. It does not require a gasket. Replace the fuel valve seat using a new gasket.

Replacing Floats and Venturi

1. Install the venturi in the throttle body, and install the small screw that secures it in place.
2. Place the fuel valve needle in the fuel valve seat and install the float assembly.
3. Install the float axle and bend the slotted bracket. The float should move freely on the axle.
4. Check the position of the float to obtain the correct fuel level as shown. The dimension **(A)** should be 1 5/32″ ± 1/32″.
5. Install the gasket that seals the throttle body to the bowl body.

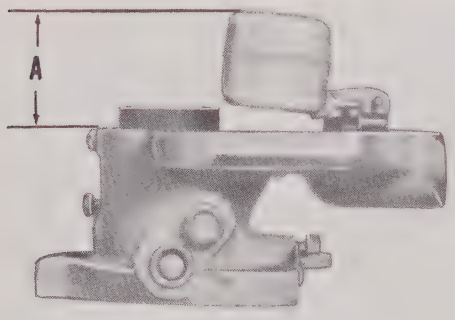

T30007

FLOAT LEVEL
A–1 5/32″ ± 1/32″.

Assembling Throttle Body to the Bowl Assembly

Place the bowl assembly in position on the throttle body being careful not to damage the float assembly.

Install the four screws and lockwashers; tighten them evenly.

Install the idle adjusting screw and spring.

Installing Carburetor and Making Final Adjustment

1. Install two new ring seals in the end of the air cleaner outlet pipe and slip the carburetor into position.
2. Install the two bolts securing the carburetor to the starting engine inlet manifold.
3. Connect the fuel line, choke control linkage and throttle control linkage.
4. As a preliminary adjustment, set the idle adjusting screw **(1)** and the main jet adjustment **(3)** at one full turn open, and adjust the throttle stop screw **(2)** to hold the throttle plate just slightly open.
5. A more accurate adjustment can be obtained while the engine is running by turning the main jet adjusting screw **(3)** out to make the mixture richer or in to make it leaner.
6. Adjust this screw to a point that will give the greatest amount of power with a clear exhaust.
7. Turn the idle adjusting screw **(1)** until the engine will idle regularly at a slow speed without emitting black smoke from the exhaust.
8. Turn this screw out to make the mixture richer or in to make it leaner.

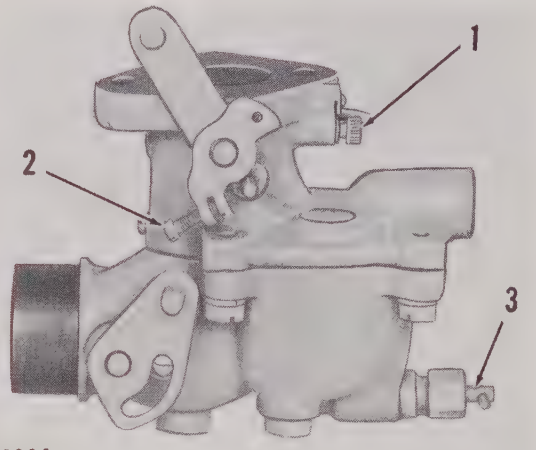

T30008

CARBURETOR ADJUSTMENT
(Carburetor removed from engine for better illustration)
1–Idle adjusting screw. 2–Throttle stop screw.
3–Main jet adjusting screw.

9. Turn the throttle stop screw **(2)** to the left (out) to decrease idling speed or to the right (in) to increase the speed.

Cylinder Head and Valves

CYLINDER HEAD REMOVAL AND INSTALLATION

1. Remove the ignition wires **(3)** and the clips **(2)**.

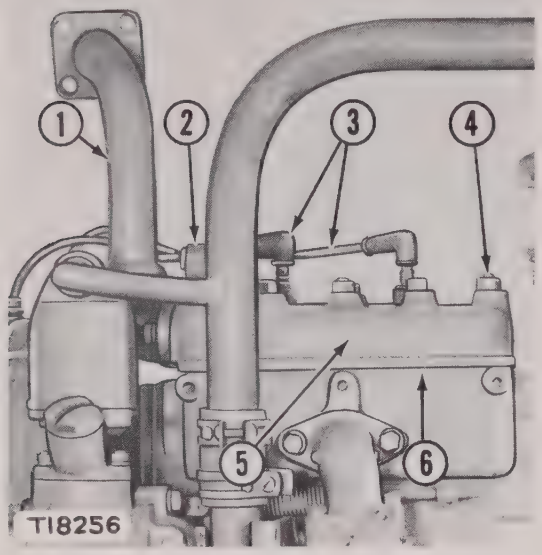

PREPARATION FOR CYLINDER HEAD REMOVAL
1–Front water line. 2–Clip. 3–Ignition wires. 4–Nut. 5–Cylinder head. 6–Gasket.

2. Remove the front water line **(1)**.
3. Remove the nuts **(4)** from the head studs.
4. Remove the head **(5)** and the gasket **(6)**.
5. Remove all carbon from the head and the block assembly.
6. Install a new gasket.
7. Install the head and nuts.
8. Tighten and torque to specifications.

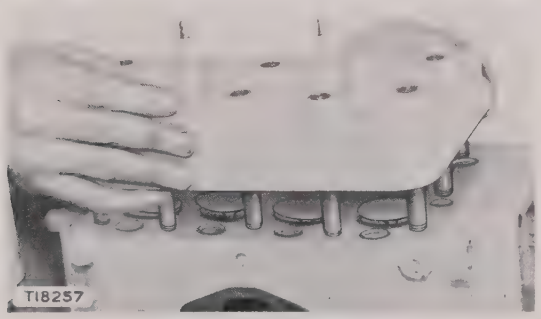

CYLINDER HEAD INSTALLATION

VALVES AND VALVE MECHANISM

Compression pressure losses occur when the valve faces and seats become pitted. Valves should be checked occasionally to see that they are seating properly. This can be done by rocking the starting engine against compression. If the cylinder head gasket and piston rings are in good condition and the engine does not rock back against compression, it is likely that the valves and seats should be re-faced and reground.

Preparation for Valve Mechanism Removal

1. With the starting engine removed from the diesel engine, remove the cylinder head.
2. Remove the carburetor **(1)**.
3. Remove the valve inspection plate **(2)**.

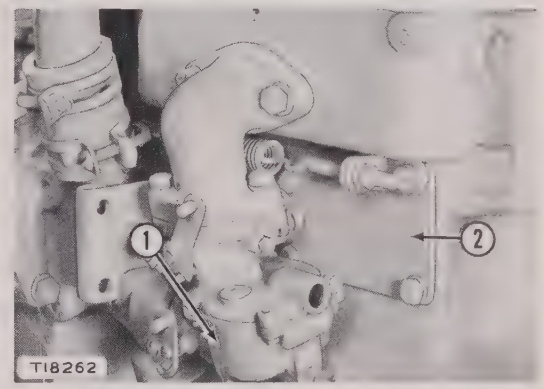

PREPARING FOR VALVE REMOVAL
1–Carburetor. 2–Plate.

Valve Mechanism Removal

With a valve spring compressor tool, compress the spring **(4)** until the locks **(6)** can be removed from the retainer **(5)**. Lift out the valve **(1)** and remove the retainer and spring.

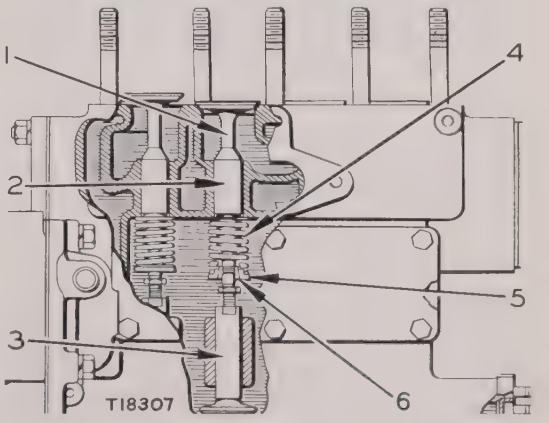

VALVE MECHANISM REMOVAL
1–Valve. 2–Bushing. 3–Lifter. 4–Spring. 5–Retainer. 6–Lock.

Inspect the valve seats in the cylinder block and the faces of the valves. Recondition them if necessary and check them as outlined in the diesel engine section. If the faces of the valves are pitted or warped, they should be replaced with new valves.

Clearance between a new valve stem and a new bushing is .002"-.004", with a wear limit of .005" for inlet valves and .007" for exhaust valves. If the valve stem bushings **(2)** are worn, they should be replaced with new bushings. Remove the camshaft as described in the topic, CAMSHAFT REMOVAL AT TIME OF RECONDITIONING. Remove the valve lifters **(3)**. Then using a drift, shaped to fit the bore of the bushing **(2)**, drive each bushing down out of the cylinder block.

VALVE LIFTER REMOVAL AND INSTALLATION

The lifters can be removed as shown, after the camshaft has been removed. See the topic, CAMSHAFT REMOVAL AT TIME OF RECONDITIONING.

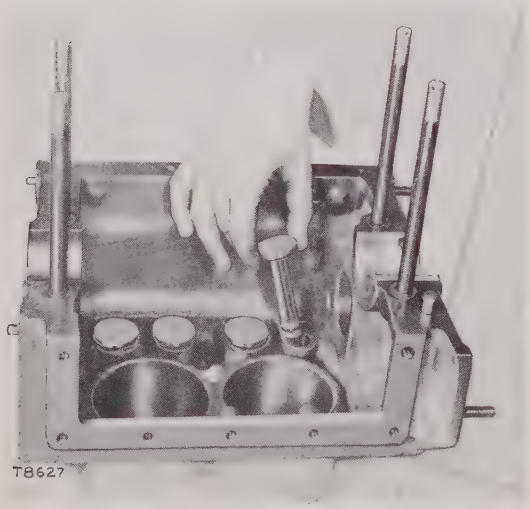

LIFTER REMOVAL

Make sure the lifters travel freely in the guide bore of the cylinder block. For adjustment see the topic, VALVE CLEARANCE ADJUSTMENT.

Replacing Valve Guide Bushings

New replacement bushings **(1)** are finished to the proper bore dimension and require no reaming after installation. When installing new bushings, press them down into the cylinder block with the inserting tool **(2)** until the top of each bushing is 1 3/16" below the top of the cylinder block or the distance **(3)**.

Carefully clean the parts of the valve mechanism before they are reassembled. When reassembling the valve mechanism, see that the locks are correctly installed in the lock retainer. Installation can be facilitated by coating the inside of the locks with heavy grease.

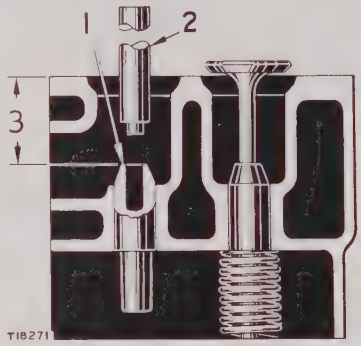

INSTALLING VALVE GUIDE BUSHING
1–Bushing. 2–Inserting tool. 3–1 3/16".

Valve Clearance Adjustment

A correct valve clearance adjustment can be made only while the engine is hot. However, if the valve mechanism has been removed, or changed in any way, the clearance should be adjusted in the following manner before operating the engine.

1. Crank the engine until the valve closes and the valve lifter is at its lowest point.
2. Hold the flat section **(3)** of the valve lifter to prevent it from turning, while a second wrench is used to turn the adjusting screw **(2)** until there is .010" clearance between the end of the valve **(1)** and the head of the adjusting screw.
3. Tighten the locknut and check the adjustment.
4. This adjustment should be rechecked while the engine is hot. The clearance should be .008".

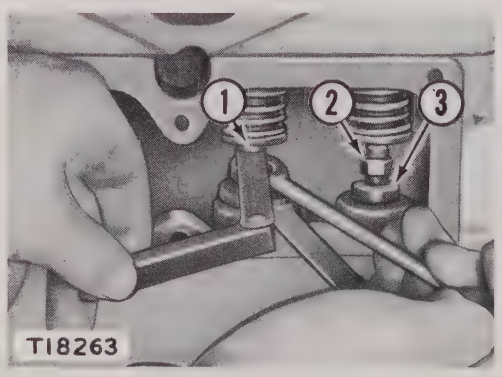

VALVE CLEARANCE ADJUSTMENT
1–Valve. 2–Adjusting screw. 3–Valve lifter.

Cylinder Head and Valves

CYLINDER HEAD REMOVAL AND INSTALLATION

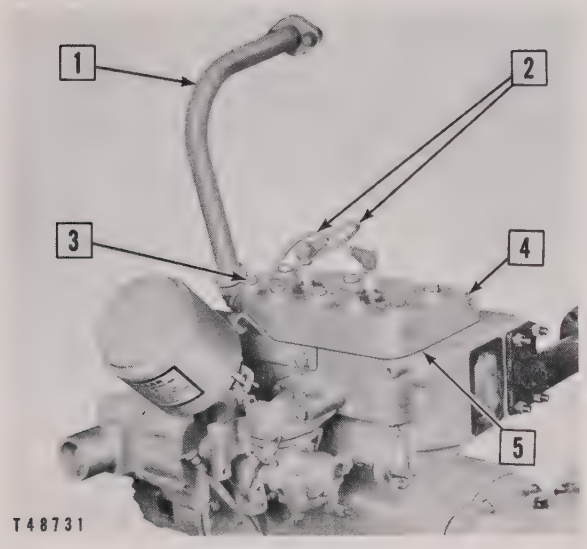

PREPARATION FOR CYLINDER HEAD REMOVAL

☐ **Remove**

1–Water line. 2–Ignition wires. 3–Bolts (eight). 4–Cylinder head. 5–Gasket.

1. Remove all carbon from the head and the block assembly.
2. Install a new gasket.
3. Install the head and bolts.
4. Tighten the bolts to the specified torque. See the topic, SPECIFICATIONS.

VALVES AND VALVE MECHANISM

Compression pressure losses occur when the valve faces and seats become pitted. Valves should be checked occasionally to see that they are seating properly. This can be done by rocking the starting engine against compression. If the cylinder head gasket and piston rings are in good condition and the engine does not rock back against compression, it is likely that the valves and seats should be re-faced and reground.

Preparation for Valve Mechanism Removal

With the starting engine removed from the diesel engine, remove the cylinder head.

Remove the carburetor **(2)**. See the covering topic.

NOTE

When installing the inspection plate **(1)**, be sure that the three copper washers are correctly placed at the through-drilled holes.

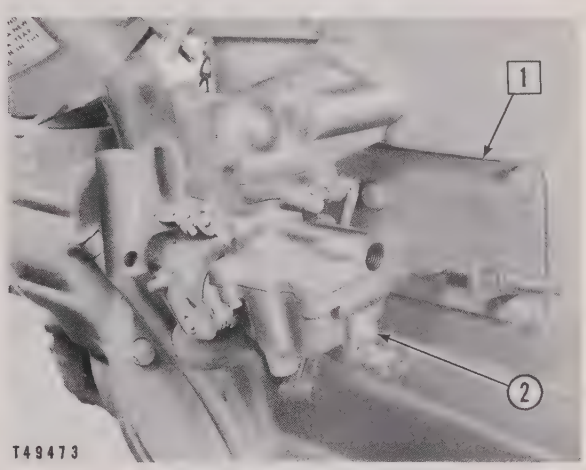

PREPARING FOR VALVE REMOVAL

☐ **Remove**

1–Plate. 2–Carburetor.

Valve Mechanism Removal

With a valve spring compressor tool, compress the spring **(4)** until the locks **(6)** can be removed from the retainer **(5)**. Lift out the valve **(1)** and remove the retainer and spring.

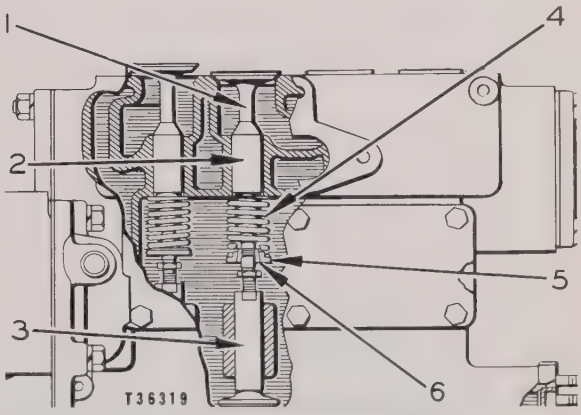

VALVE MECHANISM REMOVAL
1–Valve. 2–Guide. 3–Lifter. 4–Spring. 5–Retainer. 6–Lock.

Inspect the valve seats in the cylinder block and the faces of the valves. Recondition them if necessary and check them as outlined in the diesel engine section. If the faces of the valves are pitted or warped, they should be replaced with new valves. See the topic, SPECIFICATIONS, for the correct valve stem clearance and wear limit. If the valve guides **(2)** are worn, they should be replaced. Remove the camshaft as described in the topic, CAM-

SHAFT REMOVAL AT TIME OF RECONDITIONING. Remove the valve lifters **(3)**. Then using a drift, shaped to fit the bore of the guide **(2)**, drive each guide down out of the cylinder block.

Valve Lifter Removal and Installation

The lifters can be removed as shown, after the camshaft has been removed. See the topic, CAMSHAFT REMOVAL AT TIME OF RECONDITIONING.

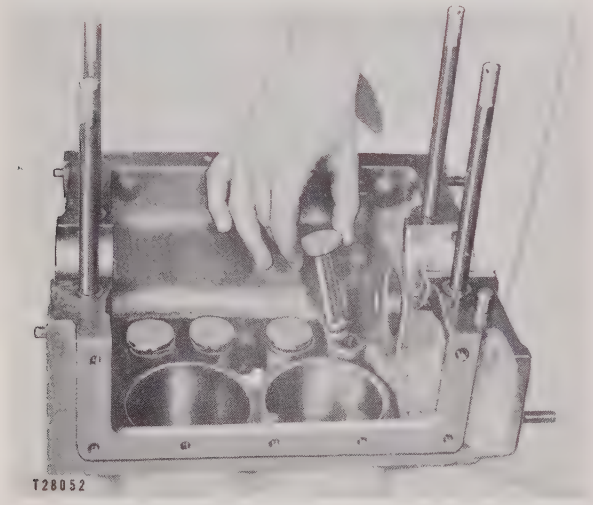

LIFTER REMOVAL

Make sure the lifters travel freely in the guide bore of the cylinder block. For adjustment see the topic, VALVE CLEARANCE ADJUSTMENT.

Replacing Valve Guides

New replacement guides **(1)** are finished to the proper bore dimension and require no reaming after installation. When installing new guides, press them down into the cylinder block with the inserting tool **(2)** until the top of each guide is 1 3/16″ below the top of the cylinder block or the distance **(3)**.

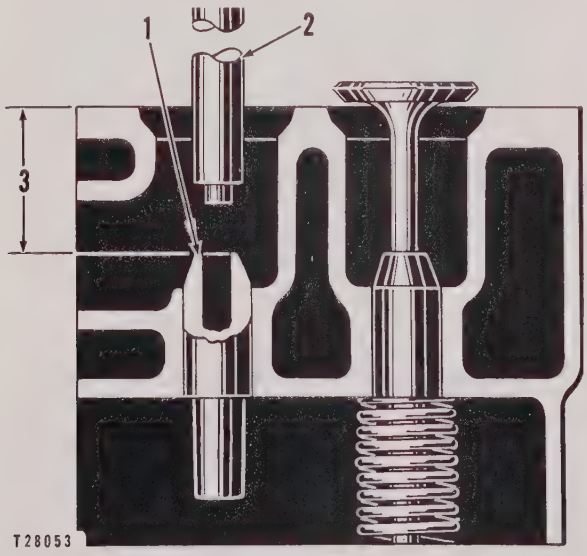

INSTALLING VALVE GUIDE
1–Guide. 2–Inserting tool. 3–1 3/16″.

Carefully clean the parts of the valve mechanism before they are reassembled. When reassembling the valve mechanism, see that the locks are correctly installed in the lock retainer. Installation can be facilitated by coating the inside of the locks with heavy grease.

Valve Clearance Adjustment

A correct valve clearance adjustment can be made only while the engine is hot. However, if the valve mechanism has been removed, or changed in any way, the clearance should be adjusted in the following manner before operating the engine.

1. Crank the engine until the valve closes and the valve lifter is at its lowest point.
2. Hold the flat section **(3)** of the valve lifter to prevent it from turning, while a second wrench is used to turn the adjusting screw **(2)** until the correct clearance is obtained between the end of the valve **(1)** and the head of the adjusting screw. See the topic, SPECIFICATIONS.
3. Tighten the locknut and check the adjustment.
4. This adjustment should be rechecked while the engine is hot. The clearance should be as specified in the topic, SPECIFICATIONS.

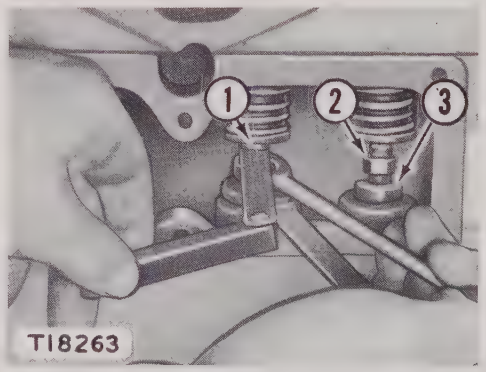

VALVE CLEARANCE ADJUSTMENT
1–Valve. 2–Adjusting screw. 3–Valve lifter.

Cylinder Head and Valves

CYLINDER HEAD REMOVAL AND INSTALLATION

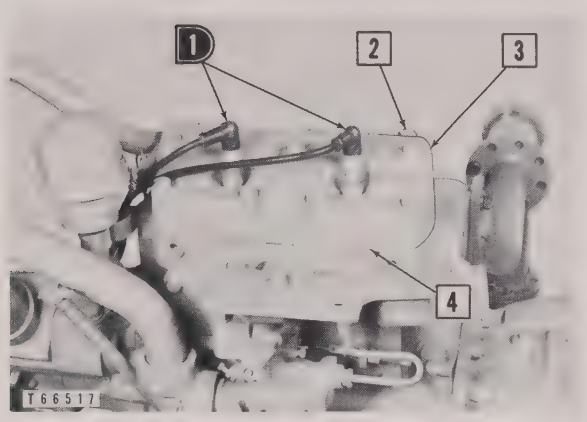

CYLINDER HEAD REMOVAL

☐ Remove ◗ Disconnect

1–Ignition wires. 2–Bolts (ten). 3–Cylinder head. 4–Gasket.

1. Remove the carbon deposits from the head and cylinder block.
2. Install a new gasket.
3. Install head and bolts and tighten the bolts to the specified torque. See the topic, SPECIFICATIONS.

VALVES AND VALVE MECHANISM

Compression pressure losses occur when the valve faces and seats become pitted. Valves should be checked occasionally to see that they are seating properly. This can be done by rocking the starting engine against compression. If the cylinder head gasket and piston rings are in good condition and the engine does not rock back against compression, it is likely that the valves and seats should be re-faced and reground.

Valve Mechanism Removal

With the starting engine removed from the diesel engine, remove the cylinder head.

Remove the carburetor **(2)**. See the covering topic.

With a valve spring compressor tool, compress the spring **(5)** until the locks **(7)** can be removed from the retainer **(6)**. Lift out the valve **(4)** and remove the retainer and spring.

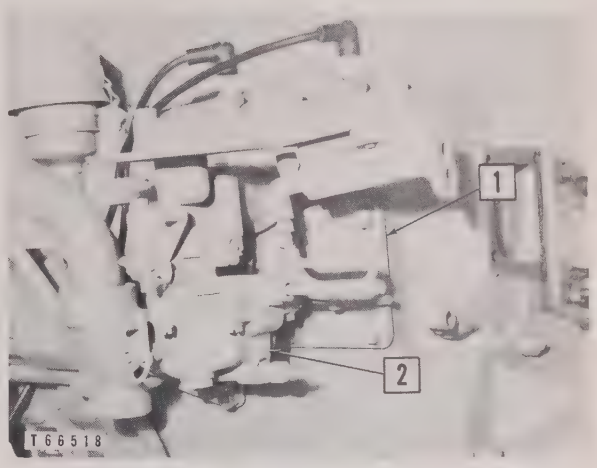

PREPARING FOR VALVE REMOVAL

☐ Remove

1–Inspection plate. 2–Carburetor.

Inspect the valve seats in the cylinder block and the faces of the valves. Recondition them if necessary and check them as outlined in the diesel engine section. If the faces of the valves are pitted or warped, they should be replaced with new valves. See the topic, SPECIFICATIONS, for the correct valve stem clearance and wear limit. If the valve guides **(3)** are worn, they should be replaced. Remove the camshaft as described in the topic, CAMSHAFT REMOVAL AT TIME OF RECONDITIONING. Remove the valve lifters **(8)**. Then using a drift, shaped to fit the bore of the guide **(3)**, drive each guide down out of the cylinder block.

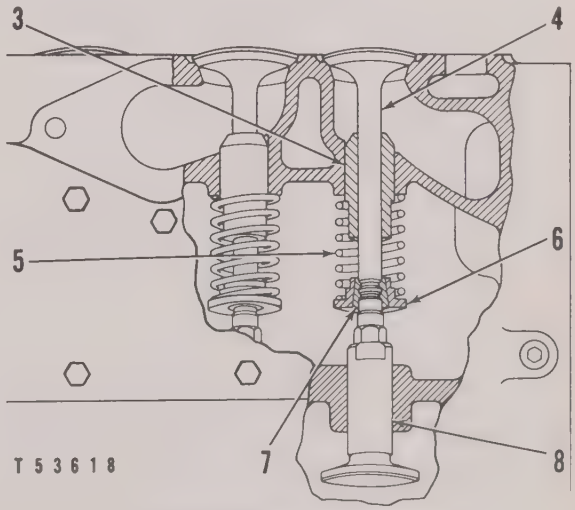

VALVE MECHANISM REMOVAL
3–Guide. 4–Valve. 5–Spring. 6–Retainer. 7–Lock. 8–Lifter.

Valve Lifter Removal and Installation

The lifters can be removed as shown, after the camshaft has been removed. See the topic, CAMSHAFT REMOVAL AT TIME OF RECONDITIONING.

Make sure the lifters travel freely in the guide bore of the cylinder block. For adjustment see the topic, VALVE CLEARANCE ADJUSTMENT.

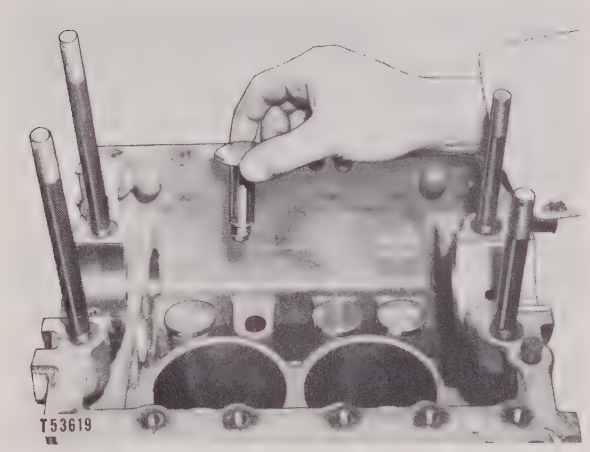

LIFTER REMOVAL

Replacing Valve Guides

New replacement guides **(2)** are finished to the proper bore dimension and require no reaming after installation. When installing new guides, press them down into the cylinder block with the inserting tool **(1)** until the bottom of each guide extends 11/16″ below the bottom of the guide bore in the block or the distance **(3)**.

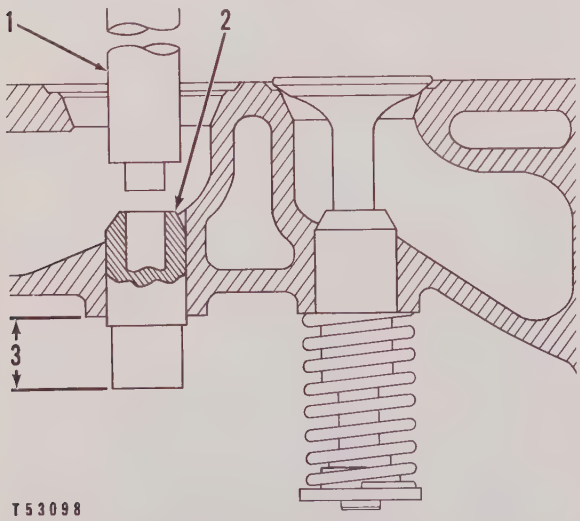

INSTALLING VALVE GUIDE
1–Inserting tool. 2–Guide. 3–11/16″.

Carefully clean the parts of the valve mechanism before they are reassembled. When reassembling the valve mechanism, see that the locks are correctly installed in the lock retainer. Installation can be facilitated by coating the inside of the locks with heavy grease.

Valve Clearance Adjustment

A correct valve clearance adjustment can be made only while the engine is hot. However, if the valve mechanism has been removed, or changed in any way, the clearance should be adjusted in the following manner before operating the engine.

1. Crank the engine until the valve closes and the valve lifter is at its lowest point.
2. Hold the flat section **(3)** of the valve lifter to prevent it from turning, while a second wrench is used to turn the adjusting screw **(2)** until the correct clearance is obtained between the end of the valve **(1)** and the head of the adjusting screw. See the topic, SPECIFICATIONS.
3. Tighten the locknut and check the adjustment.
4. This adjustment should be rechecked while the engine is hot. The clearance should be as specified in the topic, SPECIFICATIONS.

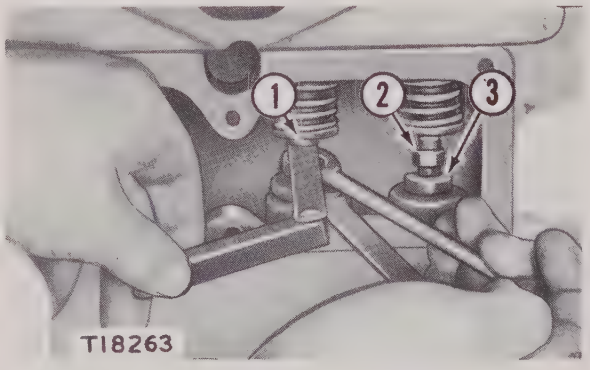

VALVE CLEARANCE ADJUSTMENT
1–Valve. 2–Adjusting screw. 3–Valve lifter.

Pistons, Rings and Connecting Rods

PISTONS

Piston clearance should be measured by a thickness gauge on the thrust side of the piston. The piston skirt clearance of a new piston should be .006" to .008".

The piston surfaces and ring grooves should be thoroughly cleaned before installing rings or replacing the piston in the cylinder. The most satisfactory method of cleaning pistons is outlined in the diesel engine topic, INSPECTING AND CLEANING PISTONS.

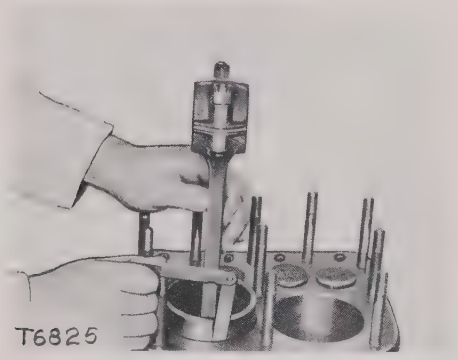

CHECKING PISTON CLEARANCE

An engine that has shown a loss of power, excessive oil consumption and loss of compression may need to have the cylinder bores reconditioned.

While the piston is removed, it is good practice to measure the cylinder bore for possible out-of-round (eccentricity) and wall taper. If the cylinder bore shows an out-of-round of more than .003" or a taper of more than .008", the cylinder bore should be reconditioned and new pistons and rings installed.

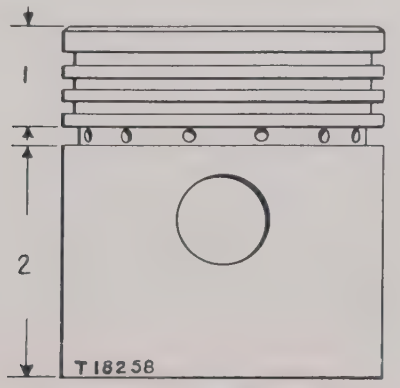

PISTON NOMENCLATURE
1–Lands. 2–Skirt.

CYLINDER AND PISTON DIAMETERS FOR REBORING THE STARTING ENGINE														
.020" Oversize					.040" Oversize					.060" Oversize				
Cylinder Dia.	Piston Dia.				Cylinder Dia.	Piston Dia.				Cylinder Dia.	Piston Dia.			
	Aluminum		Iron			Aluminum		Iron			Aluminum		Iron	
	Skirt	Lands	Skirt	Lands		Skirt	Lands	Skirt	Lands		Skirt	Lands	Skirt	Lands
3.649 3.648	3.641 3.640	3.619 3.618	3.644 3.643	3.637 3.636	3.669 3.668	3.661 3.660	3.639 3.638	3.664 3.663	3.657 3.656	3.689 3.688	3.681 3.680	3.659 3.658	3.684 3.683	3.677 3.676
T18259														

RINGS

New compression rings should have .0015" to .003" side clearance in the ring groove, and oil rings should have .001" to .0025". After the rings have been installed on the pistons, they should be free in the grooves so they can be rotated without binding.

The ring gap for compression rings is .013" to .032" and for the oil control ring is .013" to .030". This measurement should be taken at the smallest diameter of the cylinder bore.

CONNECTING RODS

Connecting Rod Bearings

Precision bearings are used. These bearings do not require fitting and can be removed and replaced through the inspection opening of the crankcase pan and cylinder block. New bearing clearance is .0025" to .0035".

When replacing the bearings, be sure the protruding portion **(1)** on the back of each bearing half lines up with its corresponding groove **(2)** in the connecting rod and bearing cap. This locks the bearing in place and keeps it from rotating.

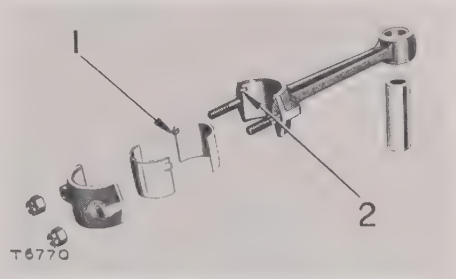

CONNECTING ROD ASSEMBLY
1–Protruding portion on back of bearing. 2–Groove.

Tighten the nuts on the bolts, which secure the connecting rod bearing caps to 36 lb. ft. This value can be exceeded to align the holes in the nuts and bolts, to install the cotter pins.

Piston Pin Bushings

It is not always necessary to replace piston pin bushings when new bearings are installed in a connecting rod. In many cases, bushings may be

serviceable even though the second replacement of bearings has been made.

After the oil has been removed from the pin and bushing, it is possible to feel the clearance between them. A new bushing should be installed only when the clearance exceeds .003".

A piston pin bushing furnished from stock must be finished to the correct size after it is pressed into the connecting rod, and the oil hole drilled.

New connecting rods have the piston pin bushing bored in a special machine which maintains the proper center-to-center distance and parallelism of the connecting rod bearing and piston pin bore. Reconditioned rods should be machined in the same manner. A new connecting rod makes a good templet for center-to-center distance.

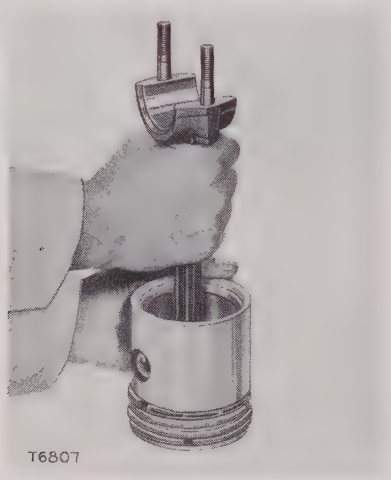

CHECKING PISTON PIN BUSHING

The piston pin should be a thumb push fit in the connecting rod bushing and piston at normal room temperature (70° F.). The piston pin should never be forced into the piston.

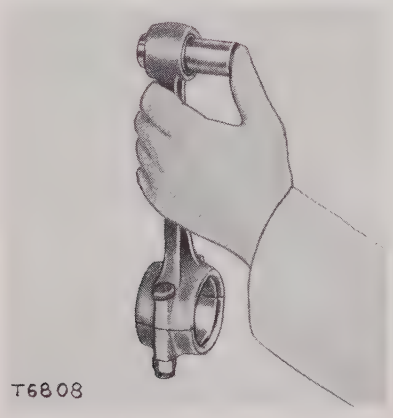

CHECKING PISTON PIN FIT

Piston assemblies should be replaced in the same cylinders from which they were removed. To assure correct assembly into the engine, the connecting rods are marked with the numbers "1" and "2", on the connecting rod pad. The rods are to be installed into the engine with the number on the rod pad turned toward the inspection opening of the oil pan. Cylinder number one is located at the timing gear end of the engine.

Piston and Connecting Rod Removal with the Oil Pan Installed

1. Remove the inspection plate so the connecting rods can be checked.

NOTE

If the connecting rods and pistons only are to be removed, they can be removed in the following manner.

2. Remove the head. See the topic, CYLINDER HEAD REMOVAL AND INSTALLATION.
3. Rotate the crankshaft so that the crankshaft journals are nearest the inspection opening in the block.
4. Remove the four cotter pins **(1)**.
5. Remove the four nuts **(2)**.
6. Remove the two connecting rod caps **(4)**.
7. Rotate the crankshaft so that the counterbalance weight **(3)** is on the bottom (Rods will not clear counterbalance weight in any other position) and push the rods and pistons through the top of the cylinder block.

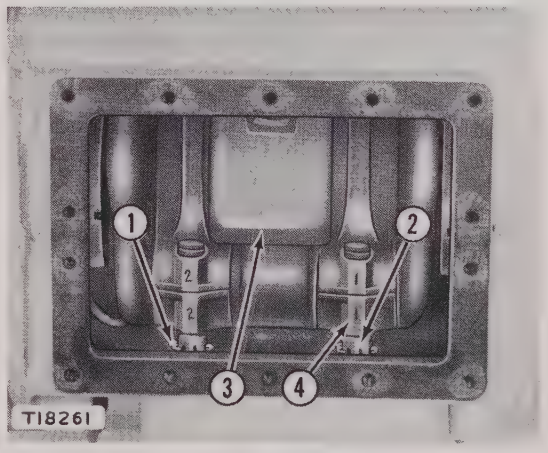

CONNECTING ROD BEARING CAP REMOVAL
1–Cotter pin. 2–Nut. 3–Counterbalance weight. 4–Connecting rod cap.

Pistons, Rings and Connecting Rods

PISTONS

Piston clearance should be measured by a thickness gauge on the thrust side of the piston. For the piston skirt clearance of a new piston see the topic, SPECIFICATIONS.

The piston surfaces and ring grooves should be thoroughly cleaned before installing rings or replacing the piston in the cylinder. The most satisfactory method of cleaning pistons is outlined in the diesel engine topic, INSPECTING AND CLEANING PISTONS.

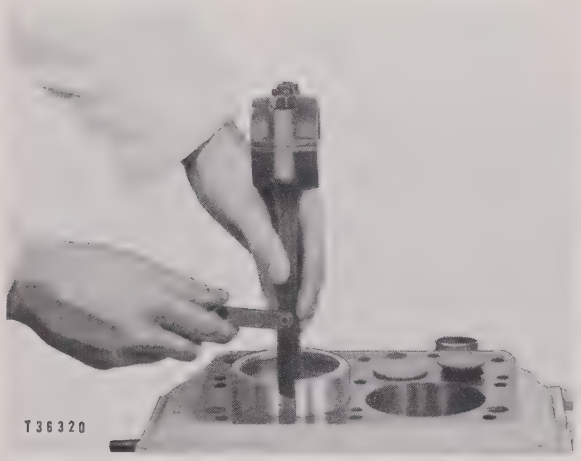

CHECKING PISTON CLEARANCE

An engine that has shown a loss of power, excessive oil consumption and loss of compression may need to have the cylinder bores reconditioned.

While the piston is removed, it is good practice to measure the cylinder bore for possible out-of-roundness and wall taper. If the out-of-roundness and wall taper of the cylinder bore exceeds the value given in the topic, SPECIFICATIONS, the cylinder bore should be reconditioned and new pistons and rings installed.

Oversize pistons are available should it become necessary to recondition the cylinder bore. For piston size and corresponding cylinder bore diameter, see the chart in the topic, SPECIFICATIONS.

RINGS

To prevent breaking or distorting of rings and damaging ring grooves a piston ring expander should be used when removing or replacing rings in the grooves.

After rings have been installed on the pistons, they should be free in the grooves so they can be rotated without binding. For the proper side clearance of new rings see the topic, SPECIFICATIONS.

The ring gap of new rings should be measured at the smallest diameter of the cylinder bore. See the topic, SPECIFICATIONS, for the proper ring gap of new piston rings.

CONNECTING RODS

Connecting Rod Bearings

Precision bearings are used. These bearings do not require fitting and can be removed, inspected, and replaced through the inspection opening of the crankcase pan and cylinder block. For new bearing clearances, see the topic, SPECIFICATIONS.

When replacing the bearings, be sure the protruding portion **(1)** on the back of each bearing half lines up with its corresponding groove **(2)** in the connecting rod and bearing cap. This locks the bearing in place and keeps it from rotating.

Tighten the nuts on the bolts, which secure the connecting rod bearing caps to the torque value listed in the topic, SPECIFICATIONS.

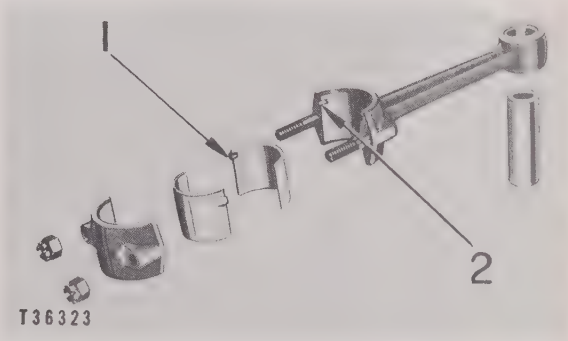

CONNECTING ROD ASSEMBLY
1–Protruding portion on back of bearing. 2–Groove.

Piston Pin Bearings

It is not always necessary to replace piston pin bearings when new connecting rod bearings are installed. In many cases, piston pin bearings may be serviceable even though the second replacement of connecting rod bearings has been made.

CHECKING PISTON PIN BEARING

After the oil has been removed from the pin and bearing, it is possible to feel the clearance between them. For the maximum allowable clearance between the bearing and pin, see the topic, SPECIFICATIONS.

A piston pin bearing furnished from stock must be finished to the correct size after it is pressed into the connecting rod, and the oil hole drilled. For the proper bore diameter see the topic, SPECIFICATIONS.

New connecting rods have the piston pin bearing bored in a special machine which maintains the proper center-to-center distance of the connecting rod bearing and piston pin bore. Reconditioned rods should be machined in the same manner. A new connecting rod makes a good template for center-to-center distance. For the correct center-to-center distance, see the topic, SPECIFICATIONS.

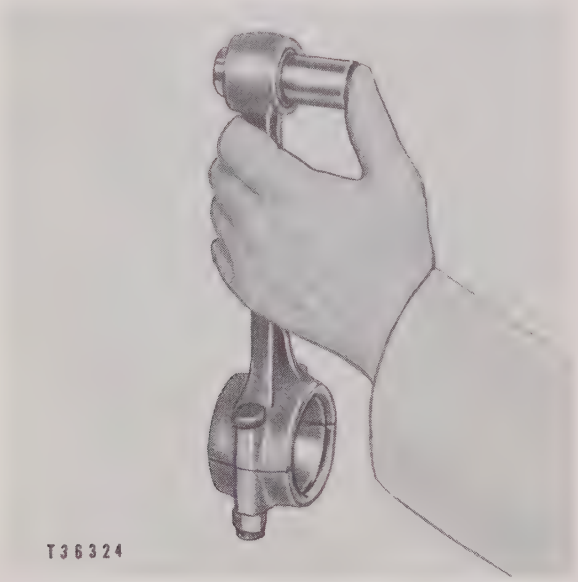

CHECKING PISTON PIN FIT

The piston pin should be a thumb push fit in the connecting rod pin bearing and piston bore at normal room temperature (70° F.). The piston pin should never be forced into the piston. For the proper clearance between the piston pin and the piston, see the topic, SPECIFICATIONS.

Piston assemblies should be replaced in the same cylinders from which they were removed. To assure correct assembly into the engine, the connecting rods are marked with the numbers 1 and 2, on the connecting rod pad. The rods are to be installed into the engine with the number on the rod pad turned toward the inspection opening of the oil pan. Cylinder number one is located at the timing gear end of the engine.

Piston and Connecting Rod Removal with the Oil Pan Installed

1. Remove the starting engine from its point of installation. See the covering topic.
2. Remove the inspection plate so the connecting rods can be checked.

NOTE

If the connecting rods and pistons only are to be removed, they can be removed in the following manner.

3. Remove the head. See the topic, CYLINDER HEAD REMOVAL AND INSTALLATION.
4. Rotate the crankshaft so that one of the crankshaft journals is nearest the inspection opening in the block.

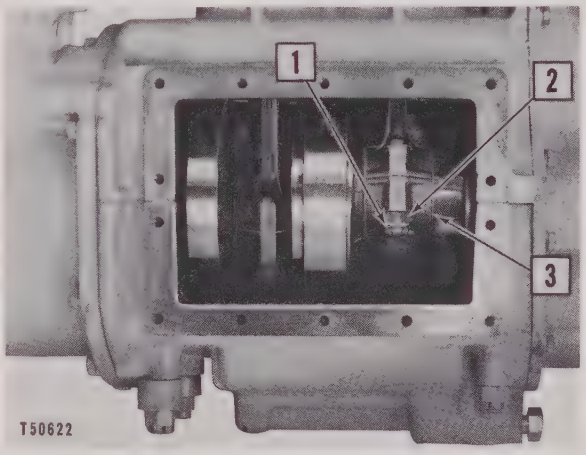

CONNECTING ROD BEARING CAP REMOVAL

☐ Remove

1–Cotter pin (two). 2–Nut (two). 3–Connecting rod cap.

5. Remove the piston and connecting rod through the top of the cylinder block.
6. Rotate the crankshaft 180° and remove the other piston in a like manner.

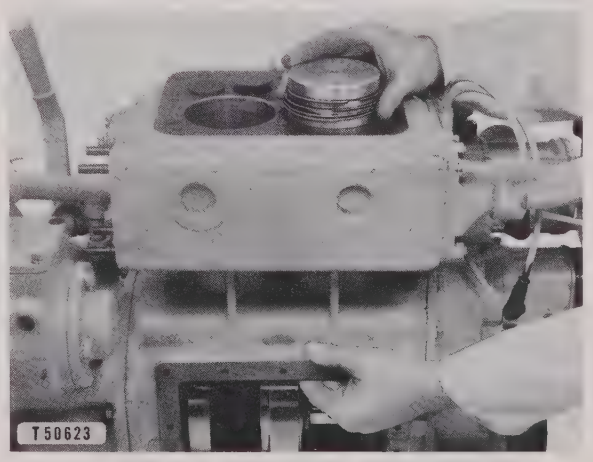

PISTON REMOVAL

Pistons, Rings and Connecting Rods

PISTONS

Piston clearance should be measured by a thickness gauge on the thrust side of the piston. For the piston skirt clearance of a new piston see the topic, SPECIFICATIONS.

The piston surfaces and ring grooves should be thoroughly cleaned before installing rings or replacing the piston in the cylinder. The most satisfactory method of cleaning pistons is outlined in the diesel engine topic, INSPECTING AND CLEANING PISTONS.

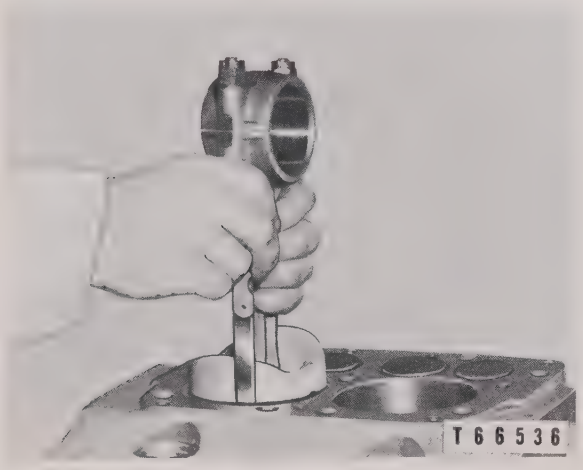

CHECKING PISTON CLEARANCE

An engine that has shown a loss of power, excessive oil consumption and loss of compression may need to have the cylinder bores reconditioned.

While the piston is removed, it is good practice to measure the cylinder bore for possible out-of-roundness and wall taper. If the out-of-roundness and wall taper of the cylinder bore exceeds the value given in the topic, SPECIFICATIONS, the cylinder bore should be reconditioned and new pistons and rings installed.

Oversize pistons are available, should it become necessary to recondition the cylinder bore. For piston size and corresponding cylinder bore diameter, see the chart in the topic, SPECIFICATIONS.

RINGS

To prevent breaking or distorting of rings and damaging ring grooves a piston ring expander should be used when removing or replacing rings in the grooves.

After rings have been installed on the pistons, they should be free in the grooves so they can be rotated without binding. For the proper side clearance of new rings see the topic, SPECIFICATIONS.

The ring gap of new rings should be measured at the smallest diameter of the cylinder bore. See the topic, SPECIFICATIONS, for the proper ring gap of new piston rings.

CONNECTING RODS

Connecting Rod Bearings

Precision bearings are used. These bearings do not require fitting. The oil pan must be removed before inspection or replacement is possible. For new bearing clearances, see the topic SPECIFICATIONS.

When replacing the bearings, be sure the protruding portion **(1)** on the back of each bearing half lines up with its corresponding groove **(2)** in the connecting rod and bearing cap. This locks the bearing in place and keeps it from rotating.

Tighten the nuts on the bolts, which secure the connecting rod bearing caps to the torque value listed in the topic, SPECIFICATIONS.

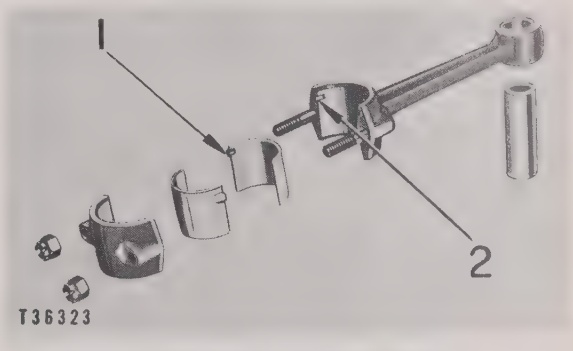

CONNECTING ROD ASSEMBLY
1–Protruding portion on back of bearing. 2–Groove.

Piston Pin Bearings

It is not always necessary to replace piston pin bearings when new connecting rod bearings are installed. In many cases, piston pin bearings may be serviceable even though the second replacement of connecting rod bearings has been made.

CHECKING PISTON PIN BEARING

After the oil has been removed from the pin and bearing, it is possible to feel the clearance between them. For the maximum allowable clearance between the bearing and pin, see the topic, SPECIFICATIONS.

A piston pin bearing furnished from stock must be finished to the correct size after it is pressed into the connecting rod, and the oil hole drilled. For the proper bore diameter see the topic, SPECIFICATIONS.

New connecting rods have the piston pin bearing bored in a special machine which maintains the proper center-to-center distance of the connecting rod bearing and piston pin bore. Reconditioned rods should be machined in the same manner. A new connecting rod makes a good template for center-to-center distance. For the correct center-to-center distance, see the topic, SPECIFICATIONS.

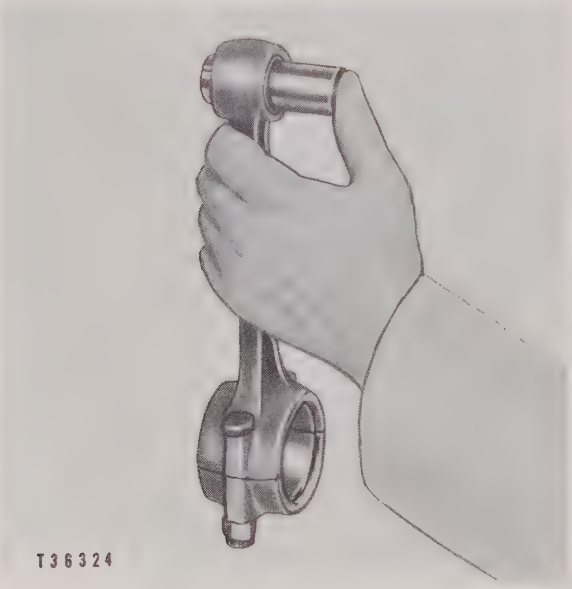

CHECKING PISTON PIN FIT

The piston pin should be a thumb push fit in the connecting rod pin bearing and piston bore at normal room temperature (70° F.). The piston pin should never be forced into the piston. For the proper clearance between the piston pin and the piston, see the topic, SPECIFICATIONS.

Piston assemblies should be replaced in the same cylinders from which they were removed. To assure correct assembly into the engine, the connecting rods are marked with the numbers 1 and 2, on the connecting rod pad. The rods are to be installed into the engine with the number on the rod pad turned toward the inspection opening of the oil pan. Cylinder number one is located at the timing gear end of the engine.

Piston and Connecting Rod Removal

1. Remove the starting engine from the tractor and mount on repair stand upside down.
2. Remove the oil pan sump so the connecting rods can be checked.
3. Remove head. See the topic, CYLINDER HEAD REMOVAL AND INSTALLATION.
4. Rotate the crankshaft so one of the crankshaft journals is accessible through the opening in the bottom of the block.

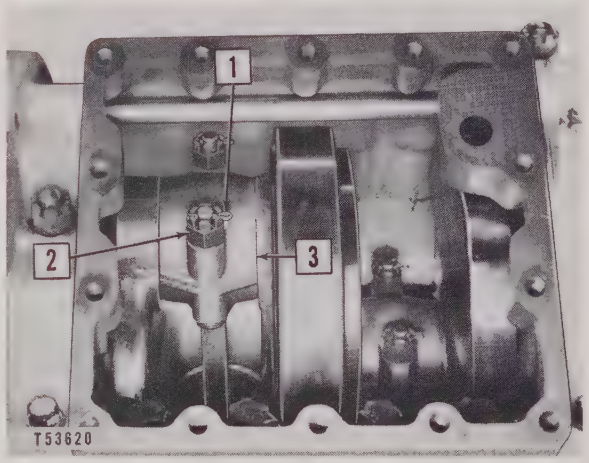

CONNECTING ROD BEARING CAP REMOVAL

☐ Remove

1–Cotter pin. 2–Nut. 3–Connecting rod cap.

5. Turn the engine over and remove the piston and connecting rod through the top of the cylinder block.
6. Rotate the crankshaft 180° and remove the other piston in a like manner.

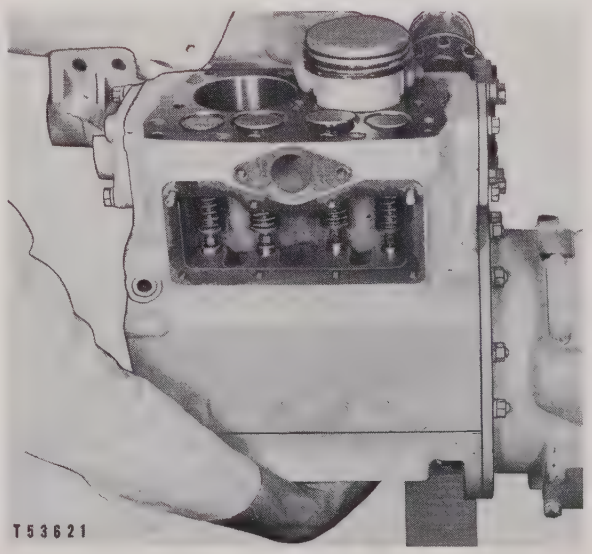

PISTON REMOVAL

Timing Gear Housing

The timing gear housing is located at the front of the starting engine block. It has mounted on, or within it, the hand crank mechanism, magneto, magneto trunnion assembly, trunnion cover, governor and governor drive assembly. The housing also houses the oil pump which is mounted on the forward end of the engine oil pan.

The governor drive gear is driven by the camshaft gear, which is a spur gear. A bevel gear located on the end of the governor shaft, opposite the governor drive gear, is engaged with the hand crank gear to permit manual starting of the engine. The hand crank mechanism can be mounted either vertically or horizontally to better adapt it for all cranking conditions. The magneto trunnion assembly is mounted in the upper right section of the timing gear housing, with shims for adjusting the backlash between the crankshaft gear, by which it is driven, and the magneto drive gear.

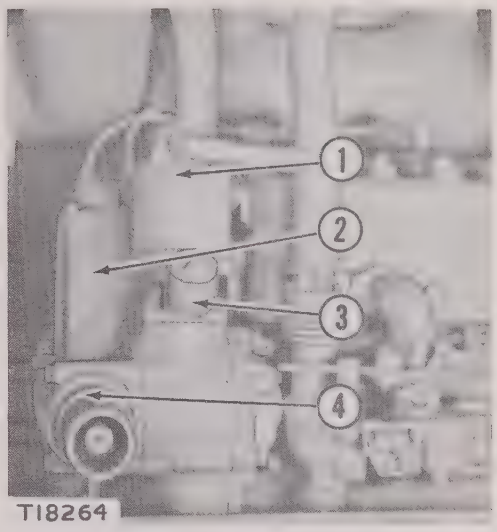

PREPARATION FOR TIMING GEAR HOUSING REMOVAL
1–Breather. 2–Magneto. 3–Filler. 4–Hand crank mechanism.

TIMING GEAR HOUSING REMOVAL

The timing gear housing can be removed from the starting engine, with the engine mounted on or removed from the diesel engine.

The following procedure describes removal of the housing with the starting engine mounted on the diesel engine.

1. Block under the forward end of the starting engine oil pan.
2. Remove the engine front mounting bracket.
3. Remove the hand crank mechanism **(4)** to facilitate the removal of other parts.
4. Remove the breather **(1)**, oil filler **(3)**, magneto **(2)**, magneto drive and drive cover.
5. Remove the capscrews which attach the timing gear housing to the cylinder block and oil pan. The housing can then be removed by tipping it slightly to one side.
6. The timing gear housing can be installed in the reverse order of removal.
7. If the housing is to be removed when the engine is removed from the diesel engine, remove parts which interfere with separating the housing from the oil pan and cylinder block and lift the housing off as shown.

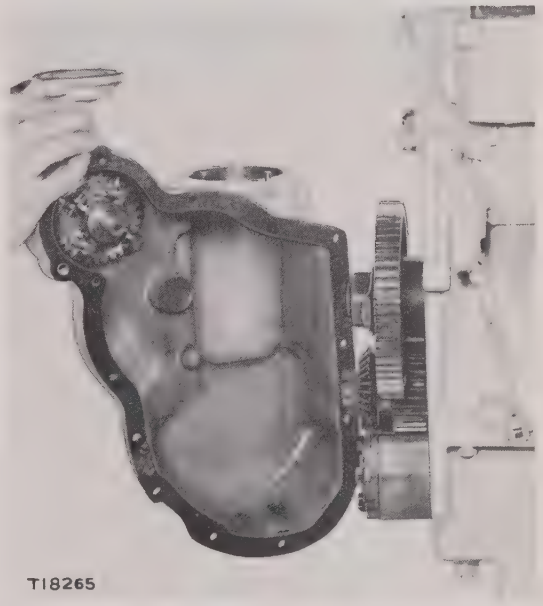

LIFTING THE HOUSING FROM THE ENGINE

HAND CRANK MECHANISM

Hand Crank Mechanism Removal

Remove the capscrews **(1)** and **(2)** and remove the hand crank mechanism **(3)** as shown.

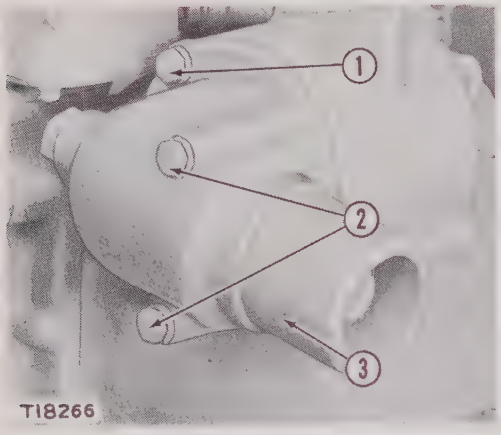

PREPARATION FOR HAND CRANK MECHANISM REMOVAL
1–Capscrew. 2–Capscrews. 3–Hand crank mechanism.

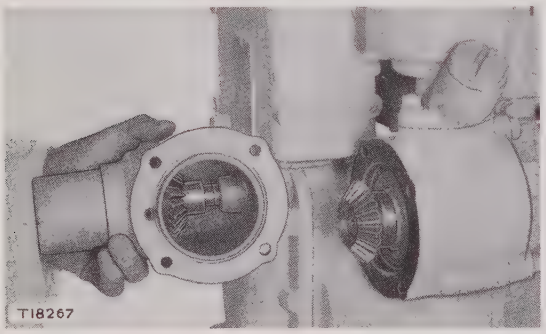

HAND CRANK MECHANISM REMOVAL

Hand Crank Mechanism Disassembly

1. Remove the pin **(7)** from the sleeve **(3)**.

NOTE

Later machines have a snap ring to retain the sleeve **(3)**.

2. Remove the plug **(1)**.
3. Place the mechanism under a hand press. With a drift inserted through the opening from which the plug **(1)** was removed, press the shaft **(9)** from the gear **(4)**.
4. Remove the shaft and gear from the housing **(2)**.
5. Examine the seal **(5)** and bushings **(6)** and **(8)** before reassembling the trunnion assembly. The seal must be pressed into the housing with the sealing edge pointing outward.

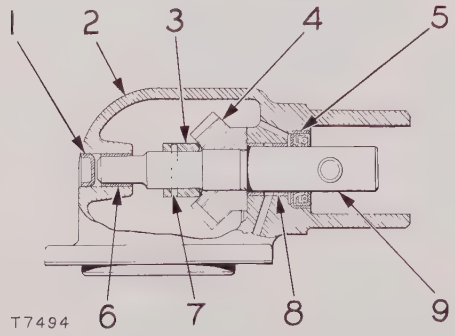

HAND CRANK MECHANISM CROSS-SECTION
1–Plug. 2–Housing. 3–Sleeve. 4–Gear. 5–Seal. 6–Bushing. 7–Pin. 8–Bushing. 9–Shaft.

GOVERNOR

The governor consists of a pair of weights and a governor spring. The tension of the governor spring tends to open the carburetor butterfly valve and the force generated by the rotating weights tends to close the butterfly valve.

When the opposing governor forces are equal, a constant amount of fuel mixture is admitted to the engine and the engine will operate at a constant speed. See the topic, STARTING ENGINE OPERATION, for further information on the governor operation.

Governor Removal and Disassembly

1. Remove the timing gear housing **(6)** from the cylinder block and the hand crank mechanism from the housing.
2. Remove the gear **(1)** from the governor shaft **(2)** with an 8B7551 Bearing Pulling Attachment, 8B7560 Step Plate, 8B7548 Push Puller and 8B7550 Legs and remove the key **(5)**.

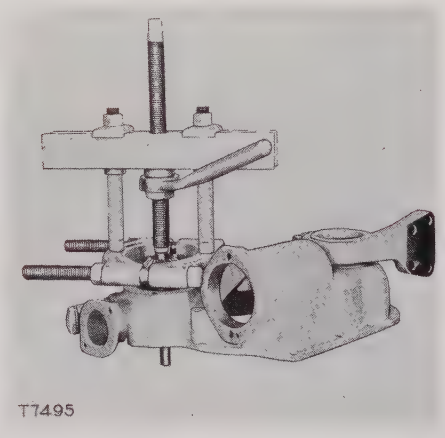

PULLING THE HAND CRANK DRIVEN GEAR

3. Remove the governor shaft and sleeve assembly from the timing gear housing.
4. Slip the sleeve assembly **(8)** from the shaft **(2)**.
5. Remove the washer **(3)**.

6. Press the shaft **(2)** from the gear **(7)**. If the governor weights **(4)** or pins are badly worn, they should be replaced with new ones.

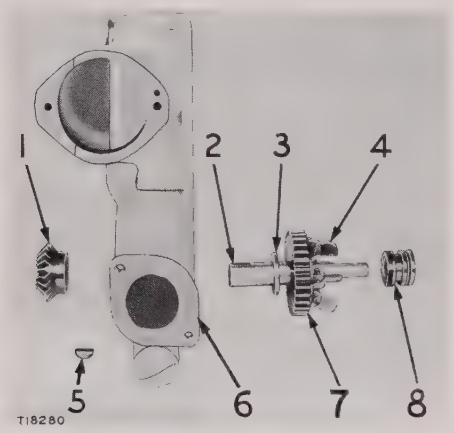

DISASSEMBLING GOVERNOR
1–Hand crank driven gear. 2–Governor shaft. 3–Washer. 4–Governor weight. 5–Key. 6–Timing gear housing. 7–Gear. 8–Sleeve assembly.

Governor Installation

When installing the governor drive shaft assembly in the timing gear housing, make sure the thrust washer is in place between the governor drive gear and the inside of the timing gear housing.

Heat the hand crank bevel gear, (preferably in hot oil) and install it on the governor shaft which protrudes from the timing gear housing.

Place the governor sleeve on the shaft with the bearing end of the sleeve turned away from the gear.

Governor Adjustment

High idle adjustment is made by tightening or loosening the nut **(1)** on the adjusting screw **(3)** to obtain the desired engine speed of 2950 RPM. This can be checked with a hand tachometer on the outer end of the shaft in the hand crank mechanism, which rotates at actual engine speed. After the proper adjustment has been made, lock the adjusting nut **(1)** with the lock nut **(2)**.

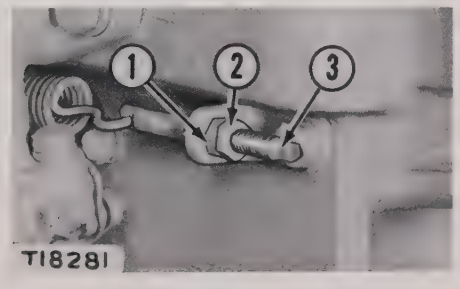

ADJUSTING THE GOVERNOR
1–Adjusting nut. 2–Locknut. 3–Adjusting screw.

MAGNETO TRUNNION DRIVE

The magneto trunnion drive assembly is driven directly off the bevel gear located at the forward end of the engine crankshaft. The trunnion assembly is installed with shims **(2)** to obtain the proper backlash between the trunnion drive gear and the bevel crankshaft gear. The trunnion assembly **(1)** has an oil hole **(3)** which mates with a similar hole in the timing gear housing. These two holes must be in alignment when the trunnion is assembled in the timing gear housing **(4)**. This is controlled by a locating dowel which will permit correct installation only.

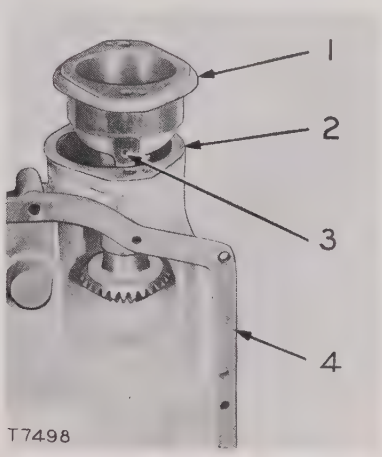

TRUNNION ASSEMBLY POSITIONED TO SHOW SHIMS AND OIL HOLE
1–Trunnion assembly. 2–Shims. 3–Oil hole. 4–Timing gear housing.

Magneto Trunnion Drive Removal

Remove the magneto. Lift the magneto trunnion drive **(1)** out of the timing gear housing **(2)**.

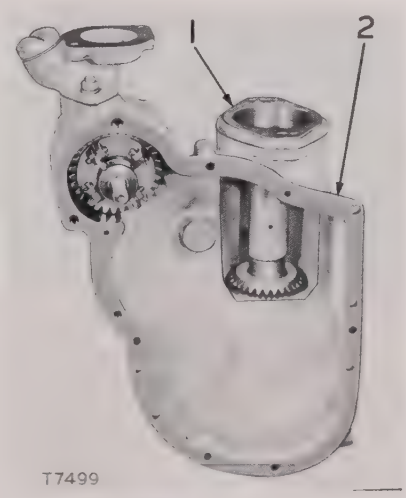

TRUNNION REMOVAL
1–Trunnion assembly. 2–Timing gear housing.

Magneto Trunnion Drive Disassembly

1. Remove the cotter pin.
2. Remove the nut **(4)** and washer **(7)** from the shaft **(1)**.
3. Either press or tap the shaft out of the gear **(3)** and remove the key **(6)**.
4. Remove the shaft **(1)** from the trunnion housing **(2)**.
5. When assembling the trunnion, check all bushings and bearing surfaces for wear or scoring.
6. Heat the gear **(3)** in hot oil to ease installation. Be sure the correct number of the shims **(5)** is in place between the trunnion housing and timing gear housing to obtain from .004″ to .006″ backlash between the trunnion drive gear and the bevel crankshaft gear.

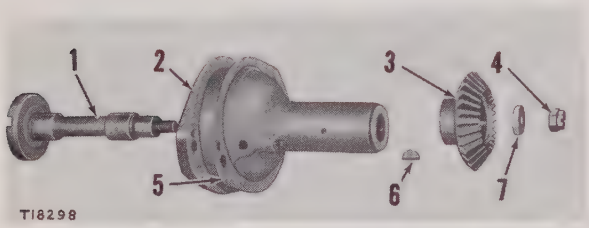

TRUNNION DISASSEMBLY
1–Shaft. 2–Trunnion housing. 3–Gear. 4–Nut. 5–Shims. 6–Key. 7–Washer.

Timing Gear Housing

The timing gear housing is located at the front of the starting engine block. It has mounted on, or within it, the hand crank mechanism, magneto and governor. The housing also houses the oil pump which is mounted on the forward end of the engine oil pan.

A bevel gear located on the end of a shaft, opposite the hand crank mechanism drive gear, is engaged with the hand crank bevel gear to permit manual starting of the engine. The hand crank mechanism drive gear drives the camshaft gear and cranks the engine. The hand crank mechanism can be mounted either vertically or horizontally to better adapt it for all cranking conditions. The magneto drive is integral with the camshaft gear.

TIMING GEAR HOUSING REMOVAL

The timing gear housing can be removed from the starting engine, with the engine mounted on or removed from the diesel engine.

The following procedure describes removal of the housing with the starting engine mounted on the diesel engine.

1. Block under the forward end of the starting engine oil pan.

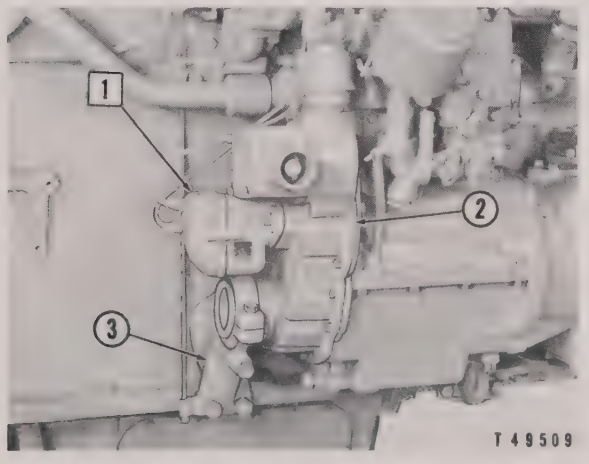

PREPARATION FOR TIMING GEAR HOUSING REMOVAL

☐ **Remove**

1–Magneto. 2–Timing gear housing. 3–Support bracket.

2. Remove the bolts securing the timing gear housing **(2)** to the starting engine block.

3. Remove the bolts securing the support bracket **(3)** to the diesel engine block and remove the timing gear housing and support bracket as a unit.

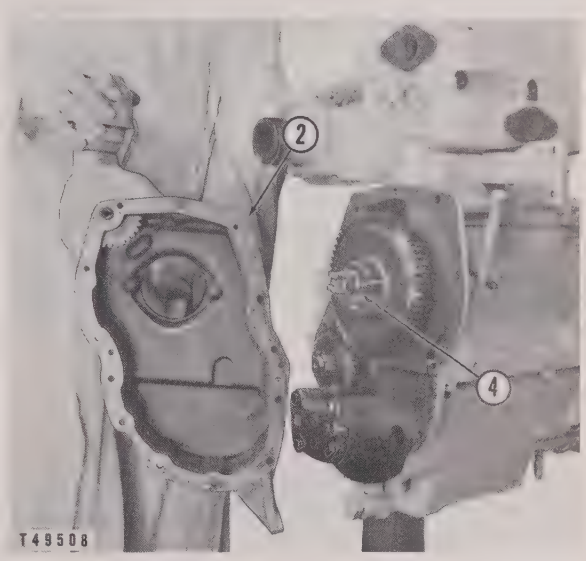

REMOVING TIMING GEAR HOUSING
2–Timing gear housing. 4–Magneto drive.

4. If the housing is to be removed when the engine is removed from the diesel engine, remove the parts which interfere with separating the housing from the oil pan and cylinder block and remove the housing **(2)** as shown.

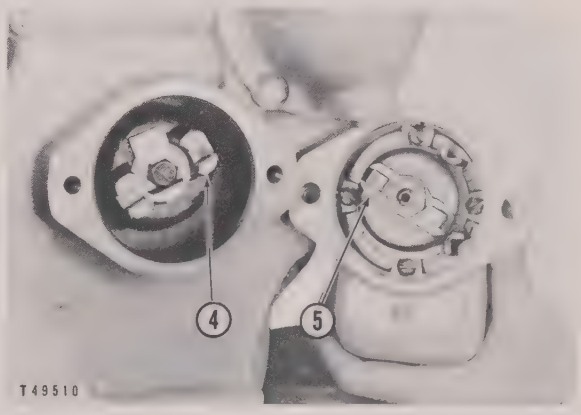

TIMING THE MAGNETO
4–Magneto drive. 5–Impulse coupling drive.

5. After installing the timing gear housing, align the X-marks on the magneto drive **(4)** and impulse coupling drive **(5)** and install the magneto.

HAND CRANK MECHANISM

Hand Crank Mechanism Removal

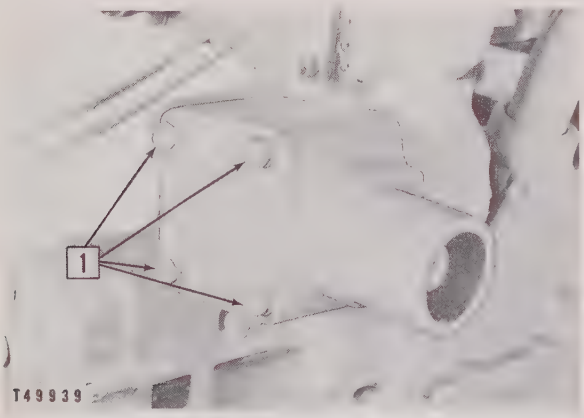

PREPARATION FOR HAND CRANK MECHANISM REMOVAL

☐ Remove

1–Hand crank mechanism bolts.

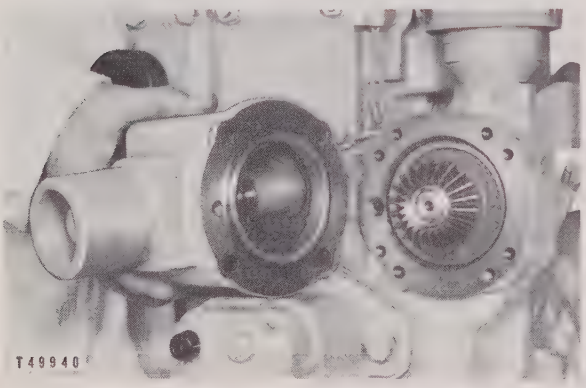

HAND CRANK MECHANISM REMOVAL

Hand Crank Mechanism Disassembly

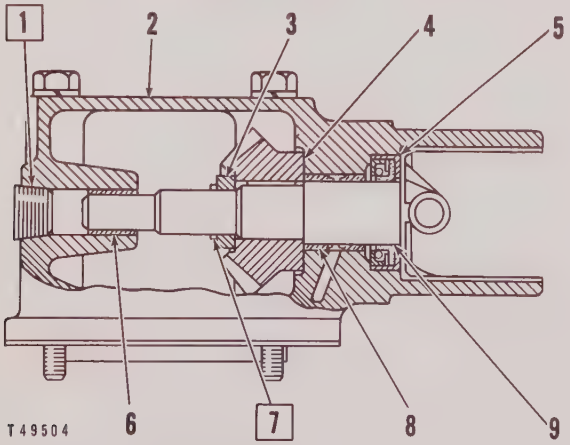

HAND CRANK MECHANISM CROSS-SECTION

☐ Remove

1–Plug. 2–Housing. 3–Washer. 4–Gear. 5–Seal. 6–Bearing. 7–Snap ring. 8–Bearing. 9–Shaft.

1. Place the mechanism under a hand press. With a drift inserted through the opening from which the plug **(1)** was removed, press the shaft **(9)** from the gear **(4)** and washer **(3)**.
2. Remove the shaft and gear from the housing **(2)**.
3. Examine the seal **(5)** and bearings **(6)** and **(8)** before reassembling the trunnion assembly. The seal must be pressed into the housing with the sealing edge pointing toward the bearings.

Hand Crank Mechanism Drive Removal and Installation

1. Press the shaft and bevel gear from the drive gear as shown.

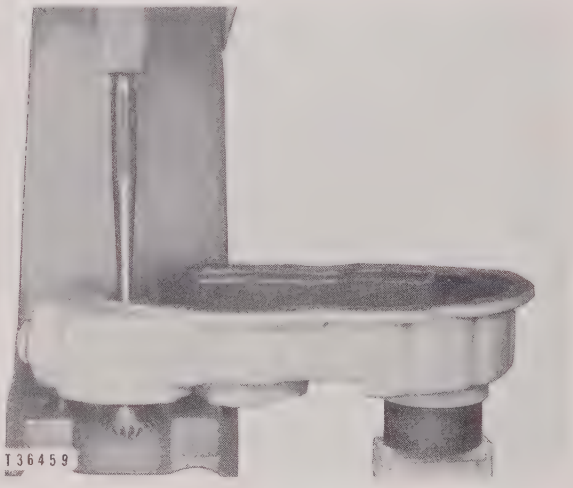

REMOVING SHAFT AND BEVEL GEAR

2. Press the shaft from the bevel gear in a similar manner.
3. Install in the reverse order of removal.

GOVERNOR

The governor consists of three ball weights, a ramp, a yoke and a governor spring. The tension of the governor spring tends to open the carburetor throttle plate and the force generated by the rotating ball weights tends to close the throttle plate.

When the opposing governor forces are equal, a constant amount of fuel mixture is admitted to the cylinders and the engine will operate at a constant speed.

Governor Removal and Disassembly

1. Remove the camshaft **(5)**, driver **(3)** and ramp **(4)** from the cylinder block. See the topic,

CAMSHAFT REMOVAL SEPARATELY. Be careful not to lose the three ball weights **(2)**.

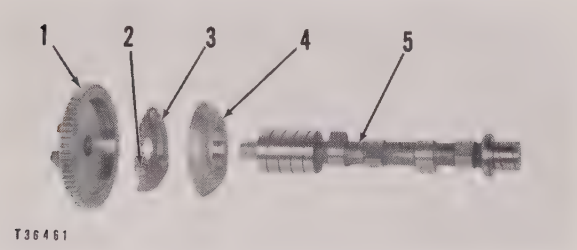

GOVERNOR DISASSEMBLY
1–Camshaft gear. 2–Ball weight. 3–Driver. 4–Ramp. 5–Camshaft.

2. Press the camshaft **(5)** from the camshaft gear **(1)** and remove the driver **(3)**. See the topic, CAMSHAFT GEAR REMOVAL AND INSTALLATION.
3. Remove the yoke **(7)** and the lever assembly from the block by loosening the bolt **(6)** and sliding the lever assembly out of the block.
4. Install the governor in the reverse order of removal.

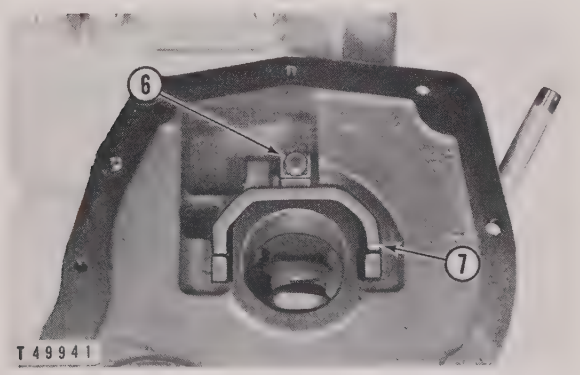

REMOVING GOVERNOR LEVER ASSEMBLY
6–Bolt. 7–Yoke.

Governor Adjustment

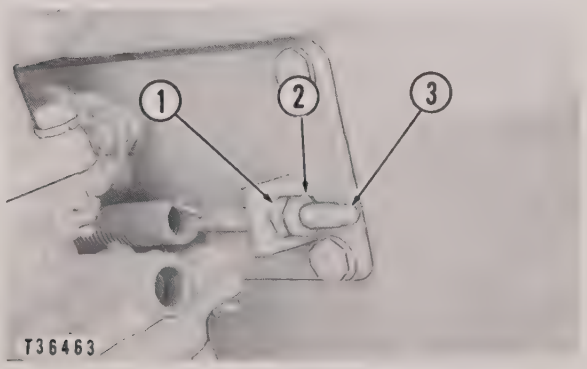

ADJUSTING THE GOVERNOR
1–Adjusting nut. 2–Locknut. 3–Adjusting screw.

High idle adjustment is made by tightening or loosening the nut **(1)** on the adjusting screw **(3)** to obtain the desired engine speed of 2950 RPM. This can be checked with a hand tachometer on the outer end of the shaft in the hand crank mechanism, which rotates at actual engine speed. After the proper adjustment has been made, lock the adjusting nut **(1)** with the locknut **(2)**.

Crankshaft, Flywheel and Main Bearings

The starting engine crankshaft main bearing journals are 2.124" - 2.125" and the connecting rod bearing journals are 1.998" - 1.999".

A crankshaft should not be used if the wear on the main bearing or connecting rod bearing journals exceeds .005" or if the connecting rod bearing journals are more than .003" out-of-round.

If the crankshaft bearing journals are reground, main bearings and connecting rod bearings .020" undersize can be obtained.

CRANKSHAFT REMOVAL

With the engine placed upside down, the pan off and the connecting rod bearing caps removed, the crankshaft (with or without the flywheel installed) can be lifted out by hand.

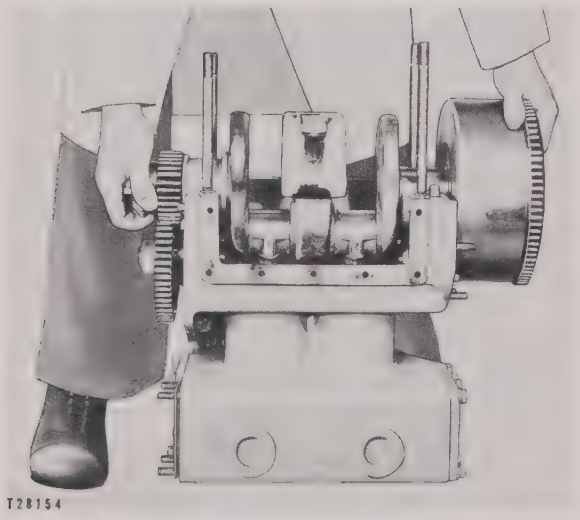

CRANKSHAFT REMOVAL

FLYWHEEL REMOVAL

After the clutch housing assembly has been removed from the cylinder block and oil pan, the flywheel **(1)** can be removed without removing the crankshaft from the cylinder block. Remove the capscrews **(2)** and locks which hold the flywheel to the crankshaft flange. After these have been removed, a slight tap may be necessary to remove the flywheel.

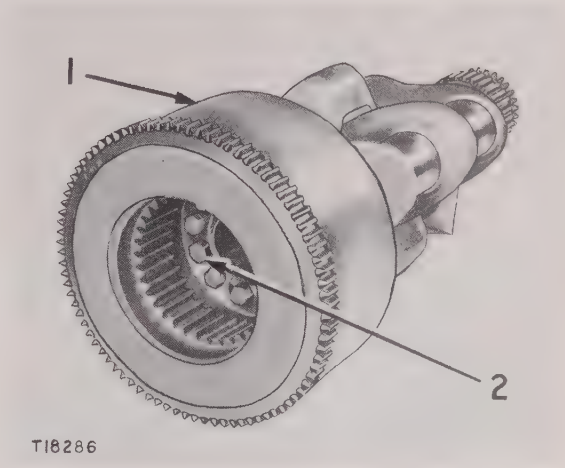

FLYWHEEL REMOVAL
1–Flywheel. 2–Capscrew.

CRANKSHAFT GEAR REMOVAL

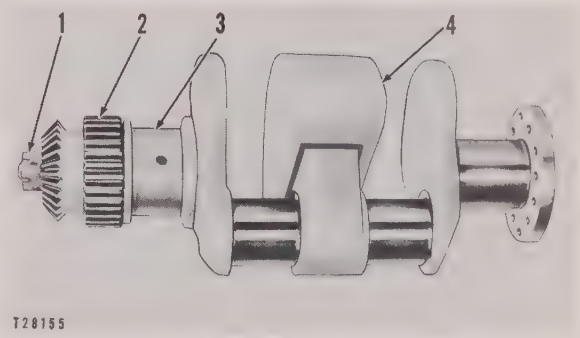

CRANKSHAFT GEAR REMOVAL
1–Nut. 2–Crankshaft gear. 3–Front main bearing. 4–Crankshaft.

The crankshaft gear **(2)** must be removed before the front main bearing **(3)** can be removed from the crankshaft **(4)**. The bearing is a flange type, one

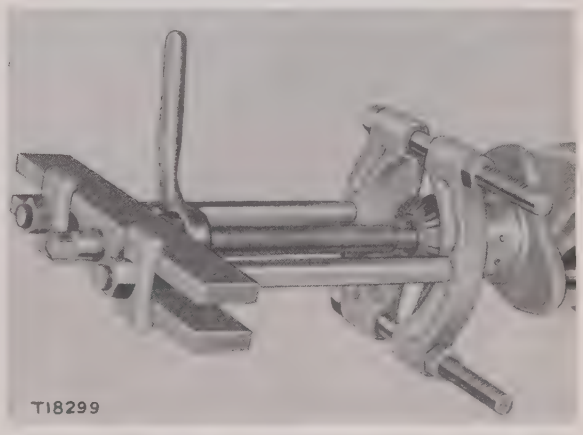

PULLING CRANKSHAFT GEAR

piece bearing, and it takes the crankshaft end thrust. Remove the cotter pin and the nut **(1)** and washer.

The gear can be removed by using the 8B7548 Push Puller and the 8B7551 Bearing Pulling Attachment as shown. The attachment must be placed in the groove between the two sets of driving teeth on the crankshaft gear, so as not to damage the gear or the bearing. After the gear has been removed, remove the crankshaft key. The front main bearing can then be removed.

CRANKSHAFT ASSEMBLY AND INSTALLATION

The crankshaft should be cleaned and inspected for wear and the oil passages in the shaft checked to be sure they are open.

1. Install the front main bearing **(4)** after it has been checked for wear. See the topic, MAIN BEARINGS. The largest flange **(2)** of the bearing should be installed nearest the number one crankshaft journal.
2. Install the crankshaft key.
3. Heat the crankshaft gear **(5)** in hot oil to ease installation.
4. Install the gear on the crankshaft.
5. Install the washer and the nut **(3)**, tighten the nut and install the cotter pin.
6. With the bearing **(4)** and the gear **(5)** installed on the crankshaft, check the crankshaft end clearance.

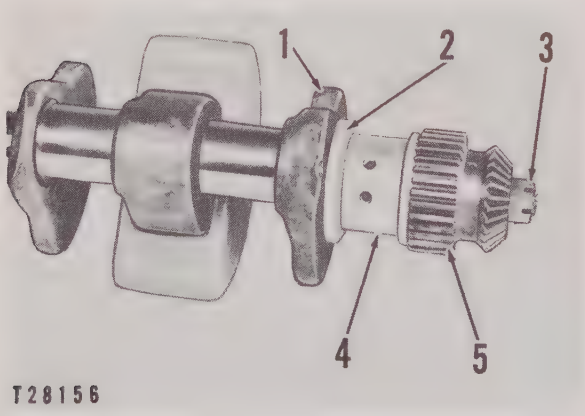

ASSEMBLING CRANKSHAFT AND CHECKING END CLEARANCE
1–Flange of crankshaft. 2–Large flange of bearing. 3–Nut. 4–Front main bearing. 5–Crankshaft gear.

NOTE

The end clearance is the distance the main bearing will move between the crankshaft flange **(1)** and the crankshaft gear **(5)**. This clearance can be checked with a thickness gauge and it should be from .005″ to .010″. The permissible clearance is .025″.

CAUTION

When installing the crankshaft assembly into the cylinder block, the front main bearing dowel hole must fit over the dowel pin in the cylinder block. The timing gear marks on the crankshaft gear and the camshaft gear should be aligned as the assembly is lowered into place.

MAIN BEARINGS

This engine has two main bearings **(2)** and **(3)**. The rear main bearing **(3)** is a split-type consisting of two halves, upper and lower. The front main bearing **(2)** is a one-piece, flange type and takes the thrust of the crankshaft. The front main bearing can be removed only after the crankshaft has been removed from the engine and the gear **(1)** has been removed. The crankshaft gear has two sets of driving teeth—a straight drive to the camshaft gear **(4)** and a bevel drive to the magneto drive gear.

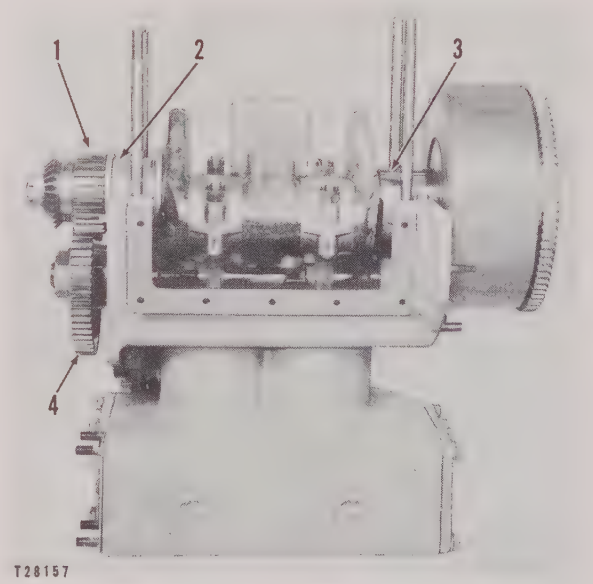

MAIN BEARINGS
1–Crankshaft gear. 2–Front main bearing. 3–Rear main bearing. 4–Camshaft gear.

Replacing Main Bearings

If wear is excessive to where the clearance exceeds .016″, new bearings should be installed. It is not necessary to ream, scrape or fit new bearings as they are machined to provide the correct new bearing clearance of .006″ - .0097″ for aluminum bearings. Bearings .020″ undersize are available for reground crankshafts. For crankshaft wear limits, see the topic, CRANKSHAFT.

Crankshaft, Flywheel and Main Bearings

CRANKSHAFT

Removal and Installation

1. Remove the starting engine and remove the clutch and transmission housing. See the covering topics.
2. Remove the oil pan and connecting rod bearing caps. See the covering topics.
3. The crankshaft, with or without the flywheel installed, can be removed as shown.

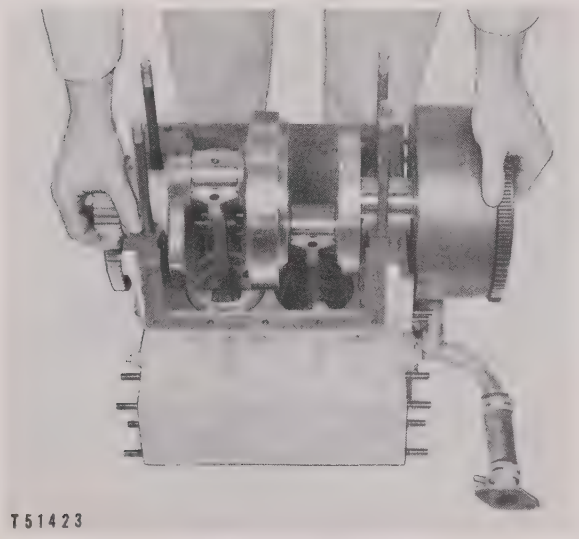

CRANKSHAFT REMOVAL

CAUTION

When installing the crankshaft assembly into the cylinder block, the front main bearing dowel hole must fit over the dowel pin in the cylinder block.

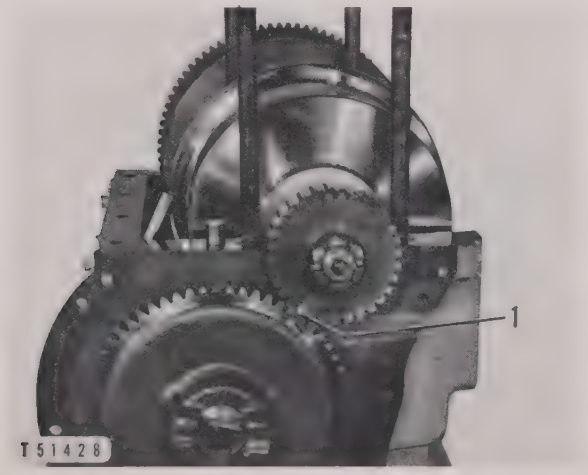

ENGINE TIMING
1–Timing marks.

4. Align the camshaft gear and crankshaft gear timing marks **(1)** when installing the crankshaft.

Disassembly and Assembly

1. Remove the flywheel. See the covering topic.

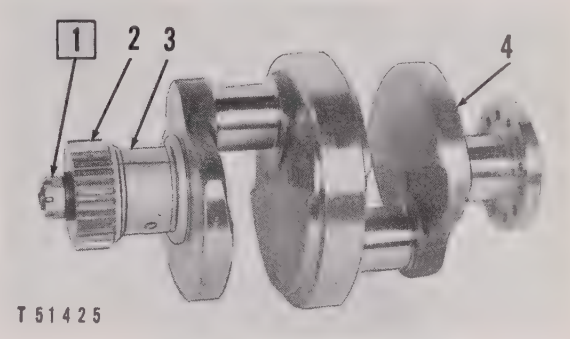

CRANKSHAFT GEAR REMOVAL

☐ Remove

1–Nut. 2–Crankshaft gear. 3–Front main bearing. 4–Crankshaft.

2. Using an 8B7548 Push Puller (with two 8B7530 Legs in place of the 5F7369 Legs), an 8B7551 Bearing Pulling Attachment, and a 7F9540 Hydraulic Puller with the 6F25 Pump Group, pull the crankshaft gear **(2)** from the crankshaft **(4)**, as shown.

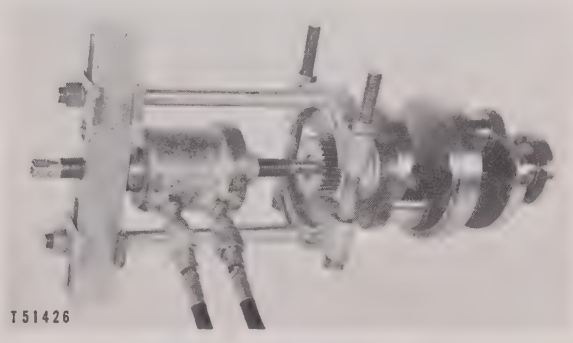

PULLING CRANKSHAFT GEAR

3. Remove the key and main bearing **(3)**.
4. Check the bearing journals for wear. See the topics, SPECIFICATIONS and MAIN BEARINGS.
5. Check the oil passages to be sure they are all open.
6. Heat the crankshaft gear **(2)** in oil to a temperature not to exceed 600° F. and install with the chamfered edge inward.

7. Tighten the crankshaft gear retaining nut to the torque value as listed in the topic, SPECIFICATIONS.
8. Check the main bearing end clearance. See the topic, SPECIFICATIONS, for correct and permissible end clearance.

FLYWHEEL

Removal and Installation

Remove the starting engine and remove the starting engine clutch and transmission housing. See the covering topics.

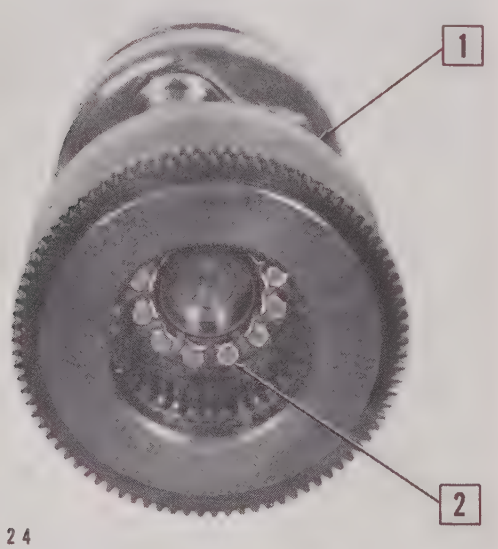

FLYWHEEL REMOVAL

☐ **Remove**

1–Flywheel. 2–Lock and bolts (twelve).

NOTE

The flywheel can be removed with the crankshaft in the engine if desired.

Tighten the flywheel bolts evenly and diametrically to the torque value given in the topic, SPECIFICATIONS.

Disassembly and Assembly

1. Press, cut or burn the ring gear from the flywheel.
2. Clean the ring gear and flywheel and remove all burrs.
3. Heat the ring gear in oil, to a temperature not to exceed 600° F., and install it on the flywheel.

NOTE

Make certain the double chamfered portion of the teeth on the ring gear is to the rear of the flywheel.

MAIN BEARINGS

This engine has two main bearings **(2)** and **(3)**. The rear main bearing **(3)** is a split-type consisting of two halves, upper and lower. The front main bearing **(2)** is a one-piece, flange type and takes the thrust of the crankshaft. The front main bearing can be removed only after the crankshaft has been removed from the engine and the gear **(1)** has been removed.

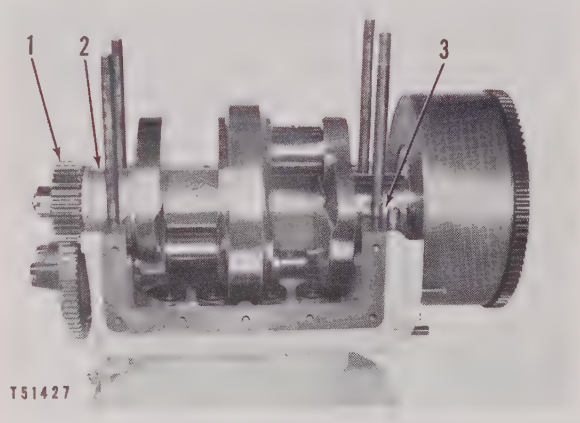

MAIN BEARINGS

1–Crankshaft gear. 2–Front main bearing. 3–Rear main bearing.

See the topic, SPECIFICATIONS, for permissible bearing clearance.

Crankshaft, Flywheel and Main Bearings

CRANKSHAFT

Removal and Installation

1. Mount the engine on the repair stand and remove the transmission and timing gear housing. See the covering topics.
2. Remove the oil pan sump, oil pan and connecting rod caps. See the covering topics.
3. The crankshaft, with or without the flywheel installed, can be removed as shown.

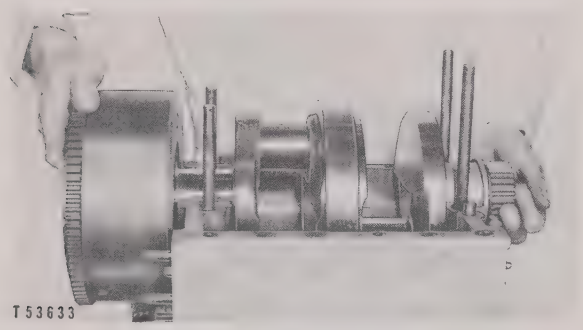

REMOVING CRANKSHAFT

CAUTION

When installing the crankshaft assembly into the cylinder block, the front main bearing dowel pin holes must fit over the dowel pin in the cylinder block.

4. Align the timing mark on the camshaft idler gear with the timing mark on the crankshaft gear when installing the crankshaft.

Disassembly and Assembly

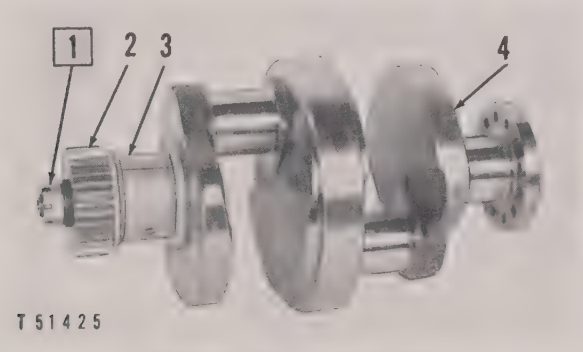

CRANKSHAFT GEAR REMOVAL

☐ Remove

1–Nut. 2–Crankshaft gear. 3–Front main bearing. 4–Crankshaft.

1. Remove the flywheel. See the covering topic.
2. Using an 8B7548 Push Puller, an 8B7551 Bearing Pulling Attachment, and a 7F9540 Hydraulic Puller with the 6F25 Pump Group, pull the crankshaft gear **(2)** from the crankshaft **(4)**, as shown.

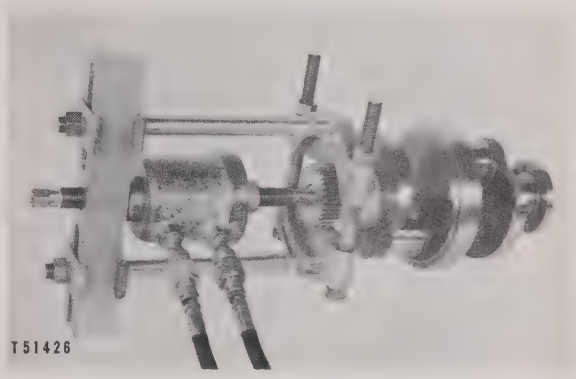

PULLING CRANKSHAFT GEAR

3. Remove the key and main bearing **(3)**.
4. Check the bearing journals for wear. See the topics, SPECIFICATIONS and MAIN BEARINGS.
5. Check the oil passages to be sure they are all open.
6. Heat the crankshaft gear **(2)** in oil to a temperature not to exceed 600° F. and install with the chamfered edge inward.
7. Tighten the crankshaft gear retaining nut to the torque value as listed in the topic, SPECIFCATIONS.
8. Check the main bearing end clearance. See the topic, SPECIFICATIONS, for correct and permissible end clearance.

FLYWHEEL

Removal and Installation

Remove the starting engine and remove the starting engine clutch and transmission housing. See the covering topics.

NOTE

The flywheel can be removed with the crankshaft in the engine if desired.

Tighten the flywheel bolts evenly and diametrically to the torque value given in the topic, SPECIFICATIONS.

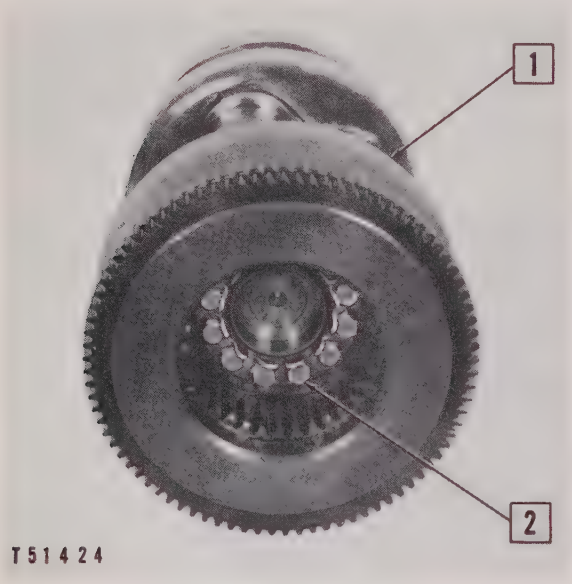

FLYWHEEL REMOVAL

☐ **Remove**

1–Flywheel. 2–Lock and bolts (twelve).

Disassembly and Assembly

1. Press, cut or burn the ring gear from the flywheel.
2. Clean the ring gear and flywheel and remove all burrs.
3. Heat the ring gear in oil, to a temperature not to exceed 600° F., and install it on the flywheel.

NOTE

Make certain the double chamfered portion of the teeth on the ring gear is to the rear of the flywheel.

MAIN BEARINGS

This engine has two main bearings **(1)** and **(2)**. The rear main bearing **(1)** is a split-type consisting of two halves, upper and lower. The front main bearing **(2)** is a one-piece, flange type and takes the thrust of the crankshaft. The front main bearing can be removed only after the crankshaft has been removed from the engine and the gear **(3)** has been removed.

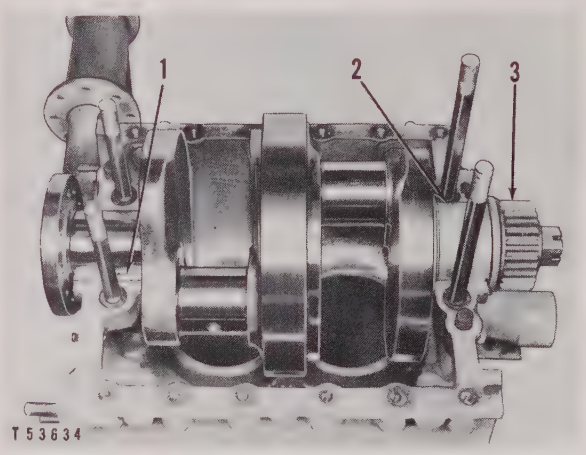

MAIN BEARINGS

1–Rear main bearing. 2–Front main bearing. 3–Crankshaft gear.

See the topic, SPECIFICATIONS, for permissible bearing clearance.

Camshaft

The camshaft can be removed with the camshaft gear in place on the shaft. There are no removable bearings for the camshaft. A precision machined bore in the block provides a bearing surface for the camshaft.

CAMSHAFT REMOVAL AT TIME OF RECONDITIONING

If the camshaft is to be removed at the time of reconditioning the engine, it can be done in the following manner.

1. Remove the head. See the topic, CYLINDER HEAD REMOVAL AND INSTALLATION.

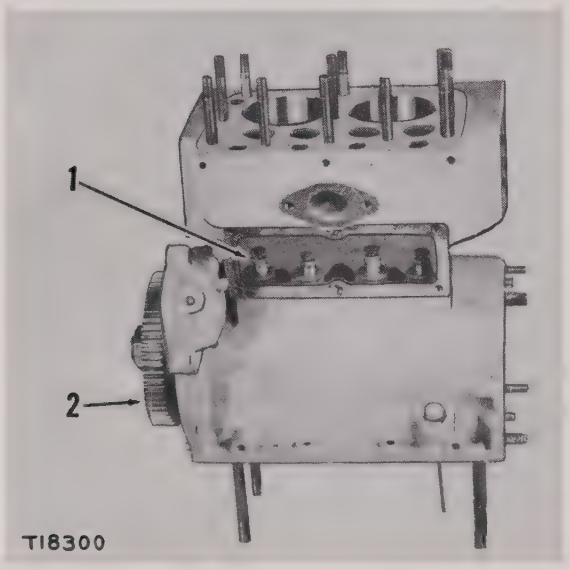

REMOVAL AT TIME OF RECONDITIONING
1–Lifter assembly. 2–Camshaft gear.

2. Remove the timing gear housing. See the topic, TIMING GEAR HOUSING REMOVAL.
3. Remove the valves, see the topic, VALVE MECHANISM REMOVAL.
4. After the valves have been removed, push the lifter assemblies **(1)** to the top of their stroke.
5. Remove the camshaft and camshaft gear **(2)**.

CAMSHAFT REMOVAL SEPARATELY

If the camshaft is to be removed at some other time rather than at the time of reconditioning, it can be done in this manner.

1. Remove the head and the timing gear housing as described in the covering topics. The valves need not be removed to remove the camshaft from the cylinder block.
2. Lay the engine on its side with the valve inspection opening up and remove the valve inspection cover.
3. Compress each spring assembly until each valve is at the top of its stroke.

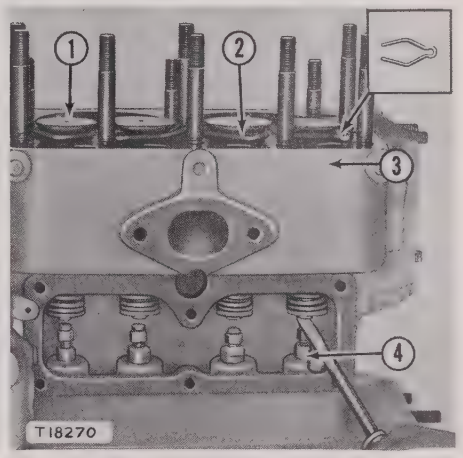

CAMSHAFT REMOVAL SEPARATELY
1–Valve. 2–Large cotter pin. 3–Cylinder block. 4–Lifter assembly.

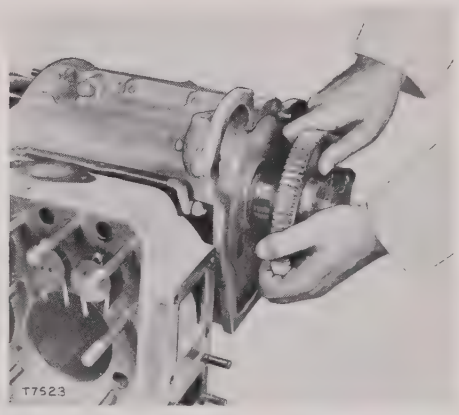

PULLING CAMSHAFT FROM CYLINDER BLOCK

4. Bend and insert a large cotter pin **(2)** between the valve face and the top of the cylinder block **(3)** where the valve seats. This will keep the valve **(1)** open at the top of its stroke.
5. Push the lifter assemblies **(4)** to the top of their stroke.
6. Remove the camshaft and camshaft gear.

NOTE

Care should be taken not to damage the camshaft bearing bores when removing and installing the camshaft.

CAMSHAFT GEAR REMOVAL AND INSTALLATION

If the camshaft gear is to be removed, use an 8B7548 Push Puller and 8B7551 Bearing Pulling Attachment, with an 8B7560 Step Plate on the end of the camshaft when pulling the gear to prevent possible damage to the shaft.

When installing the camshaft and gear, be sure the timing mark "C" on the camshaft gear is aligned with the timing mark "C" on the crankshaft gear.

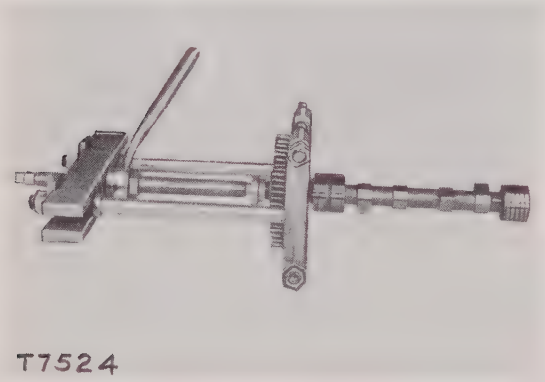

CAMSHAFT GEAR REMOVAL

CAMSHAFT END CLEARANCE

The camshaft end clearance is controlled by the machined boss **(2)** located inside the timing gear housing **(3)**. The boss **(2)** is in direct alignment with the forward end of the camshaft **(4)** when the timing gear housing is installed.

The camshaft end clearance should be from .005" to .020" and can be checked as follows.

1. Remove the magneto and magneto drive.
2. Insert a screwdriver or small bar through the opening **(5)** and pry the camshaft **(4)** back and forth several times to be certain it moves freely.
3. Pry the camshaft away from the boss **(2)** as far as possible.
4. Insert a thickness gauge **(1)** through the opening **(5)** as illustrated, and measure the distance between the forward end of the camshaft **(4)** and the machined boss **(2)**, located inside the timing gear housing.

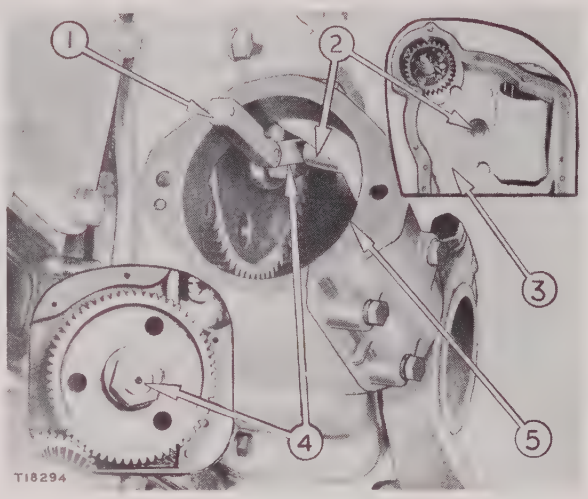

CHECKING CAMSHAFT END CLEARANCE

1–Thickness gauge. 2–Machined boss. 3–Timing gear housing. 4–Camshaft. 5–Magneto drive assembly opening.

Camshaft

The camshaft can be removed with the camshaft gear in place on the shaft. There are no removable bearings for the camshaft. A precision machined bore in the block provides a bearing surface for the camshaft.

CAMSHAFT REMOVAL AT TIME OF RECONDITIONING

If the camshaft is to be removed at the time of reconditioning the engine, it can be done in the following manner:

1. Remove the head. See the topic, CYLINDER HEAD REMOVAL AND INSTALLATION.

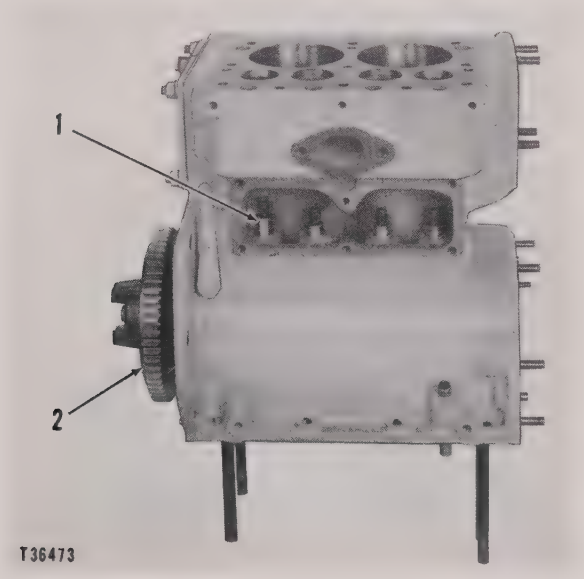

REMOVAL AT TIME OF RECONDITIONING
1–Lifter assembly. 2–Camshaft gear.

2. Remove the timing gear housing. See the topic, TIMING GEAR HOUSING REMOVAL.
3. Remove the valves, see the topic, VALVE MECHANISM REMOVAL.
4. After the valves have been removed, push the lifter assemblies **(1)** to the top of their stroke.
5. Remove the camshaft and camshaft gear **(2)**.

CAMSHAFT REMOVAL SEPARATELY

If the camshaft is to be removed at some other time rather than at the time of reconditioning, it can be done in this manner:

1. Remove the head and the timing gear housing as described in the covering topics. The valves need not be removed to remove the camshaft from the cylinder block.
2. Lay the engine on its side with the valve inspection opening up and remove the valve inspection cover.
3. Compress each spring assembly until each valve is at the top of its stroke.

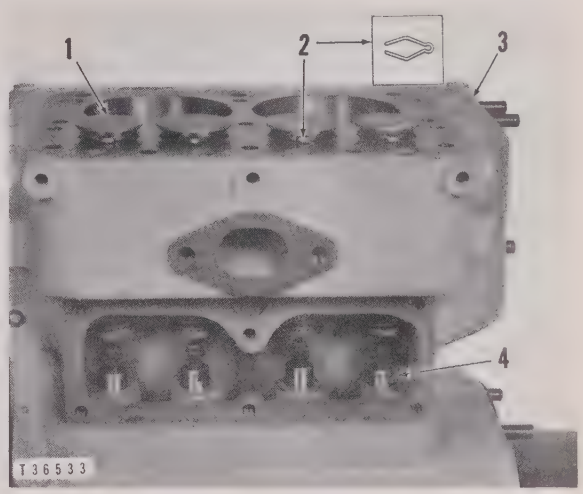

CAMSHAFT REMOVAL SEPARATELY
1–Valve. 2–Large cotter pin. 3–Cylinder block.
4–Lifter assembly.

4. Bend and insert a large cotter pin **(2)** between the valve face and the top of the cylinder block **(3)** where the valve seats. This will keep the valve **(1)** open at the top of its stroke.

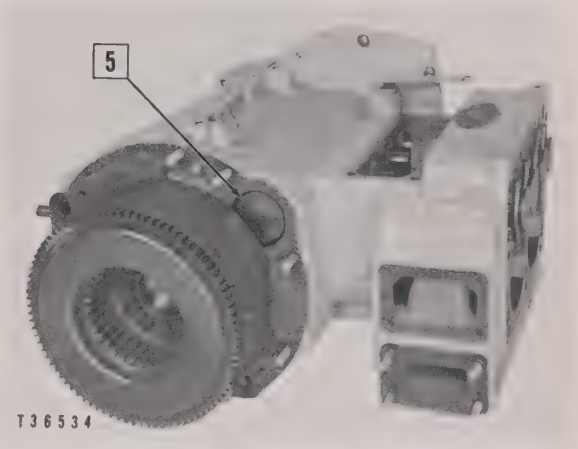

PREPARING TO REMOVE CAMSHAFT
☐ Remove
5–Thrust washer.

5. Push the lifter assemblies **(4)** to the top of their stroke.
6. Remove the camshaft and camshaft gear.

CAUTION

Care should be taken not to damage the camshaft bearing bores when removing and installing the camshaft.

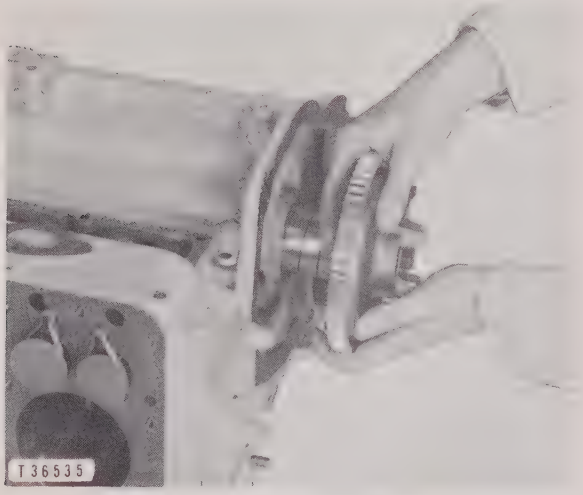

PULLING CAMSHAFT FROM CYLINDER BLOCK

CAMSHAFT GEAR REMOVAL AND INSTALLATION

Remove the bolt, lock and washer from the camshaft gear and press the camshaft from the gear supported on wooden blocks as shown.

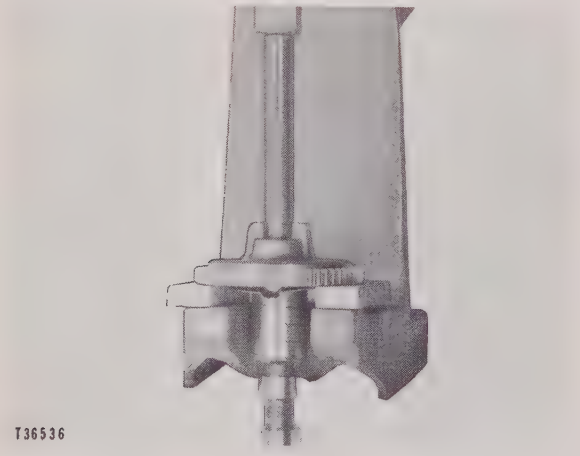

CAMSHAFT GEAR REMOVAL

CAUTION

Care should be taken not to damage the governor driver when pressing the camshaft from the camshaft gear.

When installing the camshaft and gear, be sure the timing mark "C" on the camshaft gear is aligned with the timing mark "C" on the crankshaft gear.

Camshaft

There are no removable bearings for the camshaft. A precision machined bore in the block provides a bearing surface for the camshaft.

CAMSHAFT REMOVAL AT TIME OF RECONDITIONING

If the camshaft is to be removed at the time of engine reconditioning, it can be removed in the following manner:

1. Remove the transmission from the engine. See covering topic.
2. Remove the head. See the topic, CYLINDER HEAD REMOVAL AND INSTALLATION.
3. Remove the timing gear housing and governor. See the topics, TIMING GEAR HOUSING and GOVERNOR.
4. Remove the valves. See the topic, VALVE MECHANISM REMOVAL.

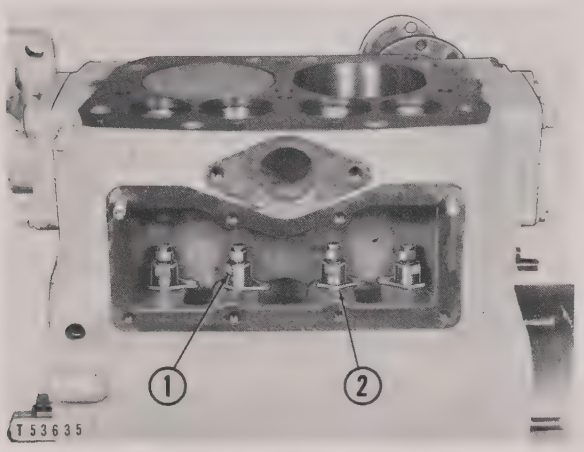

REMOVAL AT TIME OF RECONDITIONING
1–Lifter assembly. 2–Cotter pin.

5. After the valves have been removed, hold the lifters **(1)** at the top of their stroke with cotter pins **(2)** as shown.
6. Remove the camshaft as described in the following topic.

CAMSHAFT REMOVAL SEPARATELY

If the camshaft is to be removed at some time other than that of the time of engine reconditioning, it can be removed in the following manner:

1. Remove the transmission from the engine. See the covering topic.
2. Remove the head, timing gear housing, and governor as described in the covering topics. The valves need not be removed to remove the camshaft from the cylinder block.
3. Remove the valve inspection cover and compress each spring assembly until each valve is at the top of its stroke.

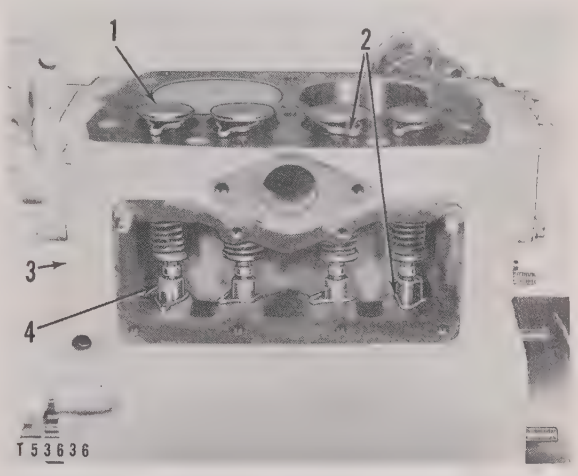

CAMSHAFT REMOVAL SEPARATELY
1–Valve. 2–Cotter pin. 3–Block. 4–Lifter assembly.

4. Bend and insert a large cotter pin **(2)** between the valve head and the top of the cylinder block **(3)** where the valve seats. This will keep the valve **(1)** open at the top of its stroke.
5. Hold the lifter assemblies **(4)** at the top of their stroke with cotter pins **(2)**.

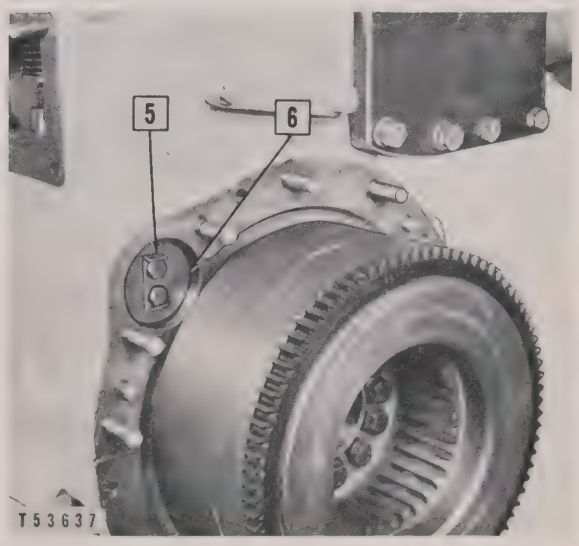

PREPARING TO REMOVE CAMSHAFT

☐ **Remove**

5–Lock and bolts. 6–Thrust washer.

6. Remove the camshaft and gear as shown.

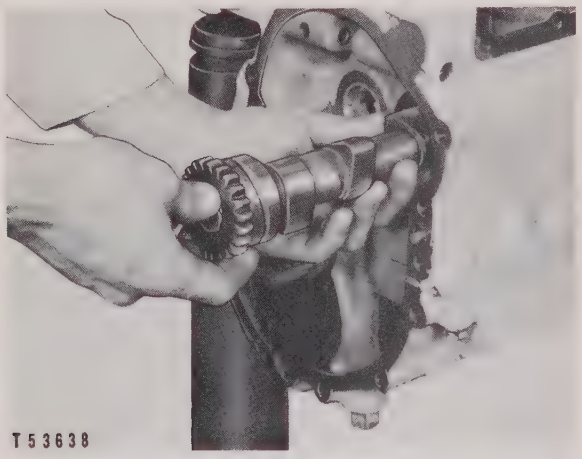

REMOVING CAMSHAFT

CAUTION

Care should be taken not to damage the camshaft bearing bores when removing and installing the camshaft.

7. See the topic, GOVERNOR REMOVAL AND INSTALLATION, for correct timing of the camshaft and idler gears.

Camshaft Gear Removal and Installation

Remove the bolt, lock and washer **(3)** from the camshaft **(1)** and pull the gear **(2)** from the camshaft.

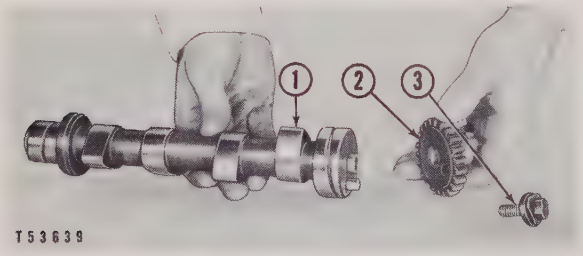

CAMSHAFT GEAR REMOVAL
1–Camshaft. 2–Camshaft gear. 3–Bolts, lock and washer.

Starting Mechanism

The starting engine transmits its power through a clutch and two speed transmission to a sliding pinion, which is engaged with the diesel engine flywheel gear by means of linkage controlled by a hand lever. The pinion is automatically released by centrifugal force acting on the pinion latches when the diesel engine starts.

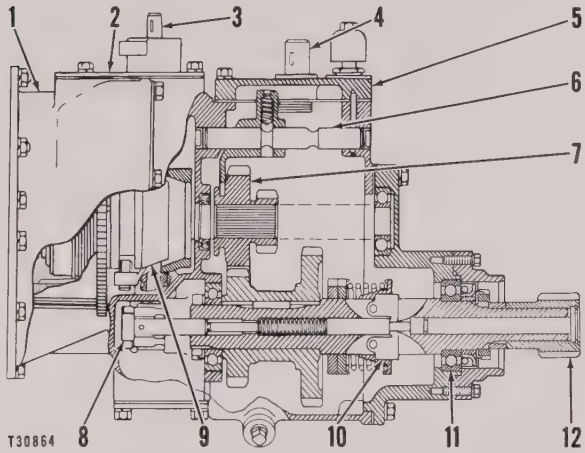

STARTING MECHANISM
1–Clutch and transmission housing. 2–Clutch inspection cover. 3–Pinion engaging shaft. 4–Transmission speed selector shaft. 5–Transmission inspection cover. 6–Shifter shaft. 7–Speed selector gear. 8–Pinion engaging collar. 9–Clutch fork. 10–Pinion latches. 11–Seal. 12–Pinion gear.

STARTER PINION

Operation

To engage the pinion **(11)**, the lever **(3)** must be moved toward the forward end of the housing **(1)**. The lever contacts the pinion engaging collar **(2)** on shaft **(4)**; this in turn pulls the shaft and pinion forward, compressing the spring **(5)**.

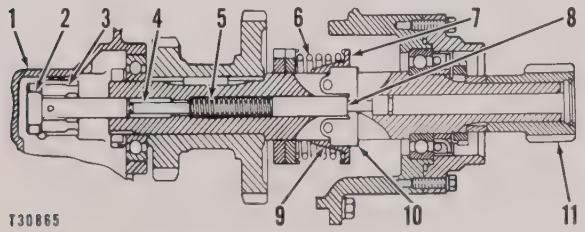

STARTER PINION OPERATION
1–Housing. 2–Pinion engaging collar. 3–Lever. 4–Shaft. 5–Spring. 6–Spring. 7–Projection on collar. 8–Shoulder. 9–Collar. 10–Latch. 11–Pinion.

The shaft must be pulled into the housing far enough to permit the latches **(10)** to snap into place over the shoulder **(8)** cut on the shaft. The pinion **(11)** is then engaged with the ring gear of the diesel engine flywheel. Due to the pressure of the spring **(6)** being applied against the projection **(7)** of the collar **(9)**, the collar holds the latches in the engaged position until centrifugal force causes the latches to overcome the spring pressure and allow the spring **(5)** to return the pinion to the disengaged position.

Starter Pinion Removal

The starting engine must be removed before removing the starter pinion.

Remove the bolts which hold the pinion cover **(2)** to the clutch and transmission housing **(1)** and remove the pinion assembly.

The starter pinion should be in the engaged position so that the pinion control lever will clear the pinion shaft engaging button.

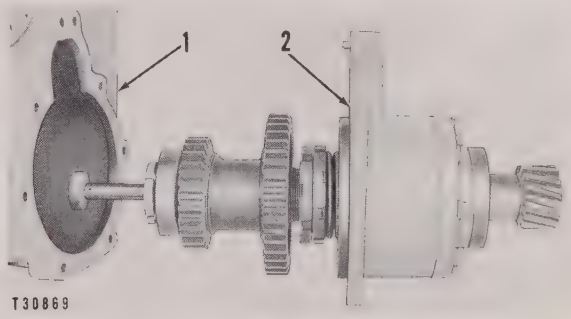

STARTER PINION REMOVAL
1–Transmission housing. 2–Pinion cover.

Starter Pinion Disassembly and Assembly

From the front end of the assembly disassemble as follows:

1. Drive the roll pin **(13)** out of the collar **(1)**.
2. Turn the collar **(1)** off the internal shaft **(3)**.
3. Remove the lock and nut **(2)**.
4. Pull the bearing **(14)** from the external shaft **(4)**.
5. Remove the gear cluster **(15)**.
6. Remove the lock nut **(16)** and the adjusting nut **(6)**.
7. Remove the spring **(17)** and the collar **(18)**.

From the rear end of the assembly continue the disassembly as follows:

8. Remove the snap ring **(12)**.
9. Remove the internal shaft **(3)**. The spring **(5)** will come with it.

WARNING

Take care when disengaging the latches (19) to remove shaft (3). Spring (5) will eject shaft (3) out of the external shaft (4).

10. Remove the pinion gear **(11)**.
11. Remove the lock and nut **(9)**.
12. Remove the bolts **(10)** holding the retainer **(23)** to the housing **(20)**.
13. While holding the housing **(20)**, tap the rear end of the external shaft **(4)** on a block of wood to force the shaft from the bearing **(21)**. The oil seal sleeve **(22)** will be forced off the shaft.
14. Remove the bearing **(21)** and seal **(8)** from the housing **(20)**.
15. Inspect the oil seal **(8)**.
16. The latches **(19)** can be replaced after removing the pin **(7)**.
17. Assemble in the reverse order of disassembly.
18. The spring **(17)** is adjusted by the nut **(6)**. For the correct adjustment see the topic, SPECIFICATIONS.

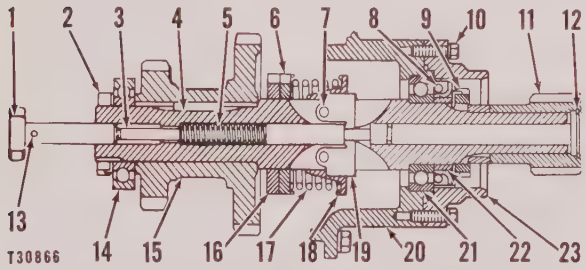

STARTER PINION
1–Collar. 2–Nut. 3–Internal shaft. 4–External shaft. 5–Spring. 6–Adjusting nut. 7–Pin. 8–Oil seal. 9–Nut. 10–Bolt. 11–Pinion. 12–Snap ring. 13–Pin. 14–Bearing. 15–Gear cluster. 16–Locknut. 17–Spring. 18–Collar. 19–Latch. 20–Housing. 21–Bearing. 22–Sleeve. 23–Retainer.

19. When installing the collar **(1)**, the distance between the rear face of the collar **(1)** and the forward face of the external shaft **(4)** should be 2⅜″, with the latches engaged in the groove of shaft **(3)**.

NOTE

If a new shaft is installed, obtain the 2⅜″ dimension as described and drill through the collar **(1)** and shaft **(3)** at the location of pin **(13)**, using a ⅛″ drill.

20. Install the pin **(13)** and stake metal at both ends of the drilled hole to secure the pin.

Adjustment of Starting Pinion Latch Spring

The starting pinion latch spring **(3)** can be adjusted without removing the starting engine from the diesel engine.

1. Remove the shifter cover from the transmission.
2. Engage the pinion and clutch and rotate the starting engine crankshaft, in the direction of flywheel rotation, until one of the notches in the spanner locknut **(1)** is visible.
3. Using a punch and hammer, loosen the locknut **(1)** by turning it toward the diesel engine.
4. To compress the spring **(3)**, place a punch in a notch of the adjusting nut **(2)** and rotate the crankshaft in the direction of flywheel rotation. Use a bar against the water manifold to support the punch.

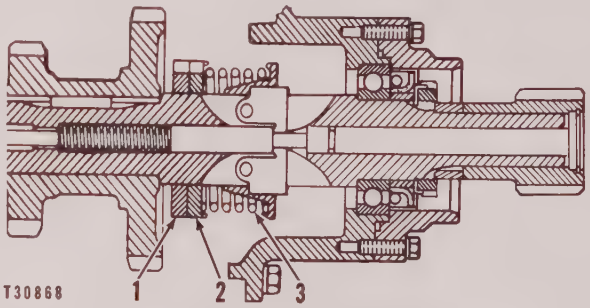

STARTER PINION ADJUSTMENT
1–Locknut. 2–Adjusting nut. 3–Starting pinion latch spring.

5. Hold the adjusting nut and turn the locknut against it. To tighten the locknut, place a punch in one of the notches and rotate the starting engine in the direction of flywheel rotation until the locknut is against the adjusting nut. Using a punch in one of the slots in the adjusting nut **(2)** drive it tight against the locknut.
6. Replace the transmission shifter cover.

TRANSMISSION SHIFT LEVER AND COVER REMOVAL AND DISASSEMBLY

1. Remove the bolts **(1)** holding the cover **(2)** to the housing **(3)** and remove the cover.
2. Loosen the locknut **(8)** holding the gear shift lever **(7)** to the shaft **(4)** and remove the lever.
3. Remove the key **(5)** from the shaft.
4. Remove the shaft from the cover.

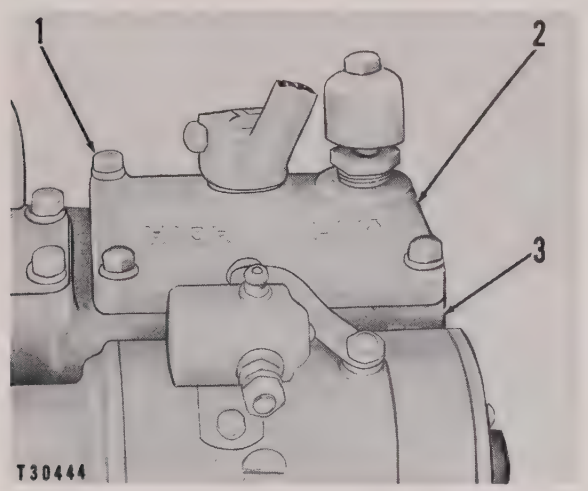

TRANSMISSION SHIFT LEVER AND COVER
1–Bolt. 2–Cover. 3–Housing.

5. If the seal **(6)** is to be replaced, install it with the lip toward the outside of the transmission.

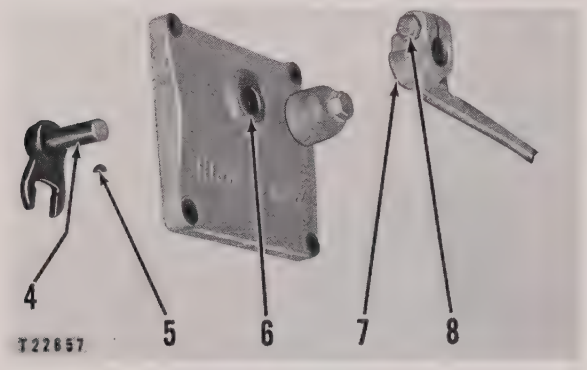

TRANSMISSION SHIFT LEVER AND COVER ASSEMBLY
4–Shaft. 5–Key. 6–Seal. 7–Lever. 8–Nut.

TRANSMISSION SHIFTING MECHANISM DISASSEMBLY

1. Remove the shift lever and cover. See topic, TRANSMISSION SHIFT LEVER AND COVER REMOVAL.
2. Remove the pin **(2)** holding the shaft in the housing.

CAUTION

Be sure to remove the forward expansion plug from the transmission before reassembly.

3. Using a drift punch, through the clutch housing, drive against the forward expansion plug forcing it, the shaft **(4)** and the rear expansion plug **(1)** out of the housing.

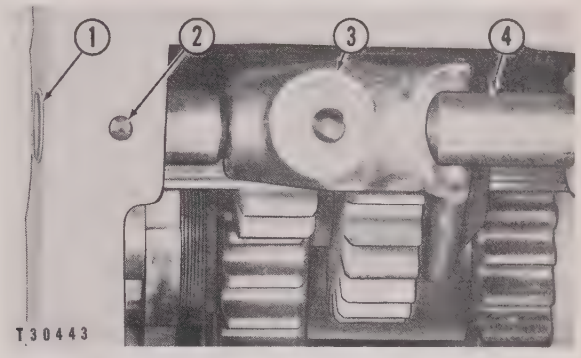

STARTING ENGINE TRANSMISSION
1–Expansion plug. 2–Pin. 3–Shifter fork. 4–Shaft.

4. After the shaft is about one-half of the way out of the housing, slide the shifter fork **(3)** from the shaft and complete the removal of the shaft.

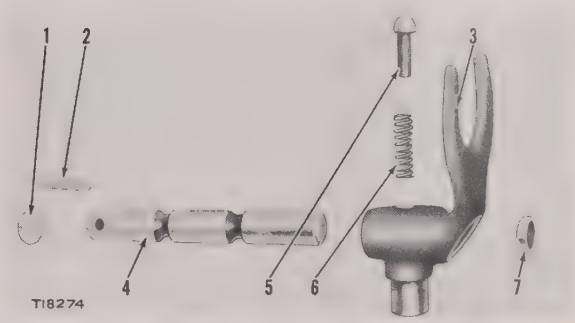

TRANSMISSION SHIFTING MECHANISM
1–Rear expansion plug. 2–Pin. 3–Shifter fork. 4–Shaft. 5–Plunger. 6–Spring. 7–Front expansion plug.

CLUTCH AND PINION ENGAGEMENT MECHANISM

The clutch is of the oil type. Earlier clutches have six outer discs **(2)** and five inner discs **(3)**. Intermediate clutches have four outer and three inner discs. Later clutches have three outer and two inner discs.

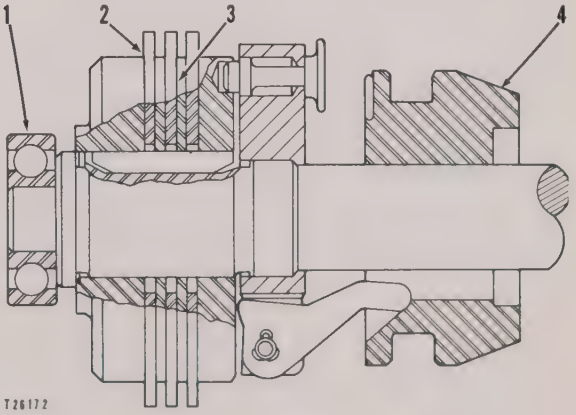

CLUTCH
1–Bearing. 2–Outer disc. 3–Inner disc. 4–Brake cone.

A braking cone **(4)**, in moving toward a stationary cone in the housing, disengages the clutch dogs and then stops the shaft from rotating. The starter pinion can then be engaged with the ring gear. The bearing **(1)** pilots the clutch in the flywheel.

Removal

1. Remove the starting engine from the diesel engine.

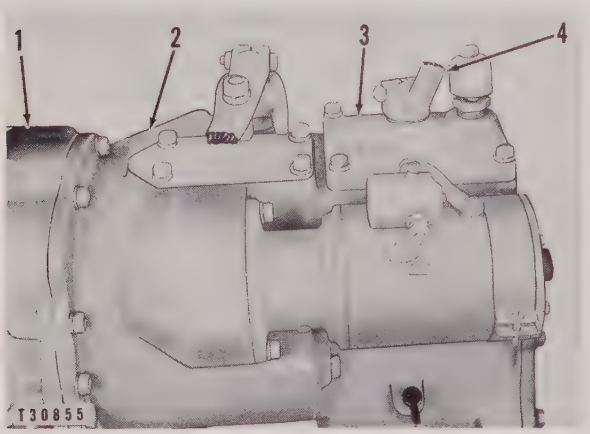

PREPARING TO REMOVE CLUTCH AND TRANSMISSION HOUSING
1–Cylinder block. 2–Clutch and transmission housing. 3–Cover. 4–Gear shift lever.

2. Engage the starting engine clutch to keep the clutch discs aligned. This will facilitate installation of the clutch.
3. Remove the bolts and nuts that secure the clutch and transmission housing **(2)** to the cylinder block **(1)** and the oil pan.
4. Remove the clutch and transmission housing.

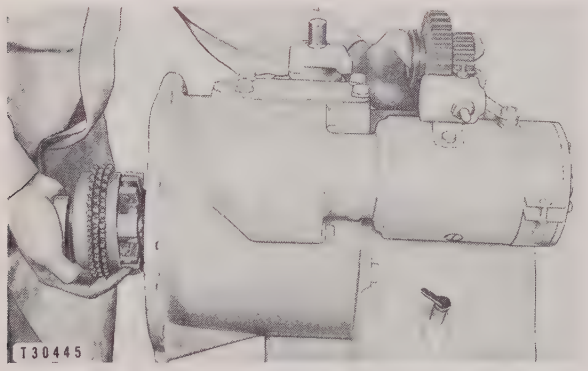

CLUTCH REMOVAL

5. Remove the cover **(3)** and the gear shift lever **(4)** as a unit.
6. Loosen the clamp bolt and remove the lever from the top of the shaft **(6)**.
7. Remove the clutch assembly, holding the sliding gear so it cannot drop and damage the teeth of the gear.

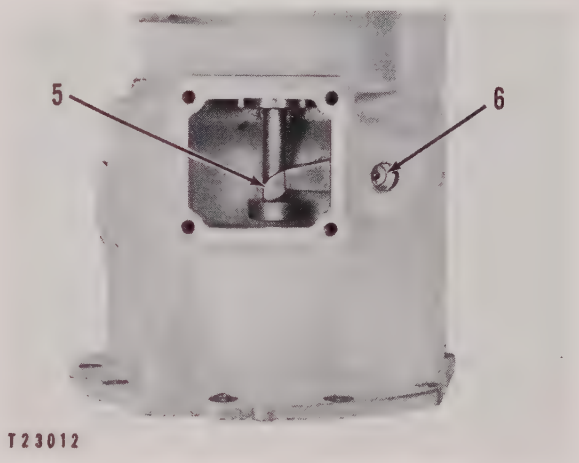

PREPARING TO REMOVE PINION ENGAGEMENT LEVER
5–Pinion engagement lever. 6–Shaft.

8. Loosen the bolt in the clutch engagement lever **(8)**.
9. Remove the plug and cover from the bottom of the housing and drive the shaft **(6)** along with shaft **(10)** out of the pinion engagement lever **(5)**.

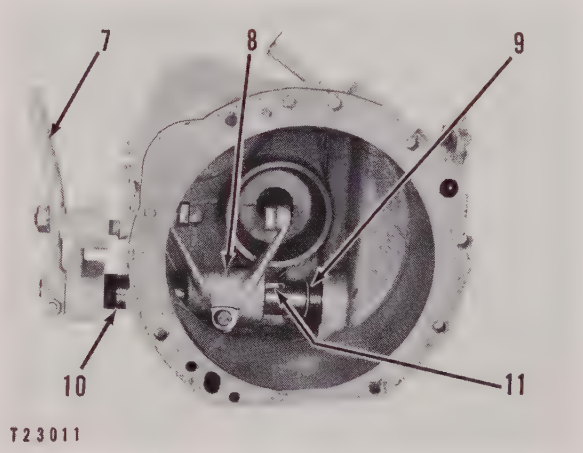

PREPARING TO REMOVE SHAFTS AND CLUTCH ENGAGEMENT LEVER
7–Lever. 8–Clutch engagement lever. 9–Seal. 10–Shaft. 11–Key.

10. Move the lever **(7)**, shaft **(10)** and the shaft **(6)** far enough from the clutch and transmission housing so that the seal **(9)** can be removed from the shaft.
11. Slide the clutch engagement lever **(8)** toward the serrated end of the shaft **(6)** and remove the key **(11)** from the shaft **(10)**.

12. Remove the shafts from the clutch and transmission housing and then remove the clutch engagement lever **(8)**.

13. Remove the ring on the lower portion of the shaft **(6)** and separate the shaft **(6)** from shaft **(10)**.

14. The seal and bearings in the shaft **(10)** can be removed if worn or damaged.

Clutch Disassembly and Assembly

1. Disengage the clutch and remove the throw-out collar **(11)**.
2. Pull the clutch adjusting lock pin **(10)** and turn the spider assembly **(4)** counterclockwise to remove it from the shaft.
3. The dogs **(5)** can be removed by removing the cotter pins and pins **(9)**.
4. Remove the adjusting lock plate **(8)**.
5. Remove the inner discs **(6)** and outer discs **(7)**.
6. Remove the front plate **(2)**.
7. Remove the keys **(3)** from the shaft.
8. Remove the bearing **(1)** from the shaft.

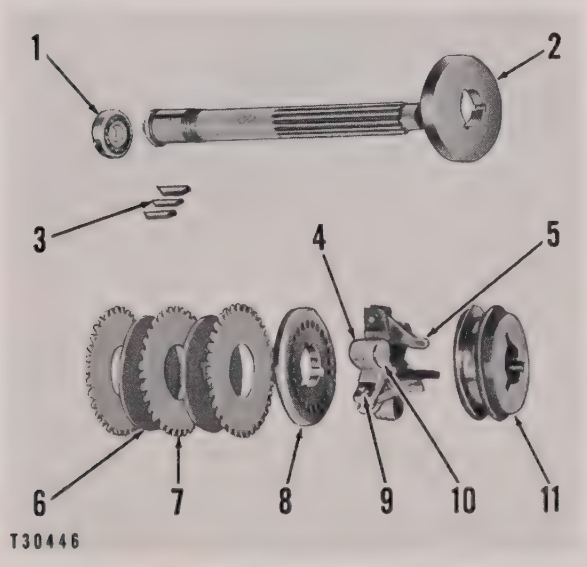

CLUTCH DISASSEMBLY
1–Bearing. 2–Front plate. 3–Keys. 4–Spider assembly. 5–Dog. 6–Inner plate. 7–Outer plate. 8–Lock plate. 9–Pin. 10–Lock pin. 11–Throw-out collar.

9. The braking cone which is part of the collar **(11)** works against a cone which is fastened to the clutch housing by two bolts.

CAUTION

When installing the cone in the clutch housing, **do not** tighten the bolts holding it.

10. After assembling the clutch and installing it in the clutch housing, install the clutch housing to the cylinder block and oil pan. The final adjustment can then be made. It should require a distinct snapover to engage and disengage the clutch when it is properly adjusted.

11. Adjustment is made by pulling the clutch adjusting pin **(10)** and turning the spider assembly **(4)** clockwise to tighten the clutch, or counterclockwise to loosen.

12. After the clutch has been installed in the housing, and the housing installed to the cylinder block and oil pan, engage the clutch brake and then tighten the bolts holding the brake cone to the clutch housing. This will center the cone in relationship to the collar **(11)**.

Installation and Adjustment

1. Press the bearings **(8)** and **(13)** into the shaft assembly **(11)** until they are bottomed.
2. With the lip of the seal turned out, press the seal **(7)** into the bore of the shaft assembly.

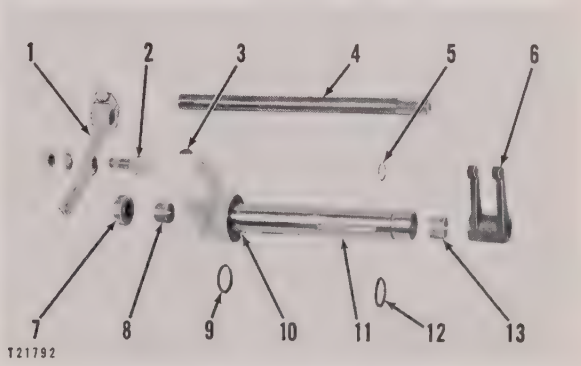

PREPARING TO INSTALL PARTS
1–Lever. 2–Block. 3–Key. 4–Shaft. 5–Ring. 6–Pinion engagement lever. 7–Seal. 8–Bearing. 9–Seal. 10–Groove. 11–Shaft assembly. 12–Seal. 13–Bearing.

3. Install the ring **(5)** into the groove of the shaft **(4)**, then place the shaft into the shaft assembly **(11)**.
4. Install the seal **(9)** onto the shaft assembly and into the groove **(10)**.
5. Start the shafts into the bore of the clutch and transmission housing and install the clutch engagement lever **(14)** on the shaft.
6. Move the clutch engagement lever **(14)** toward the serrated end of the shaft **(4)** until the key **(15)** can be installed in the keyway of the shaft assembly **(11)**.

7. Move the clutch engagement lever over the key and install the seal **(12)**.

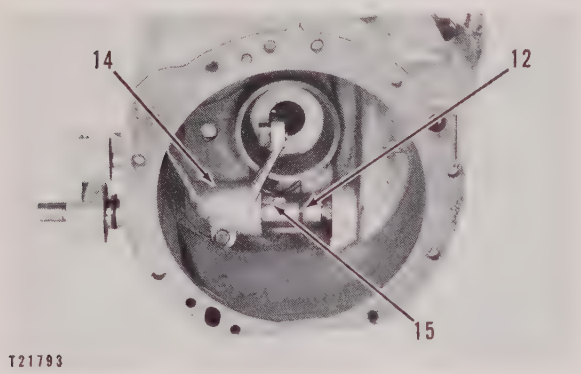

INSTALLING SHAFT AND CLUTCH ENGAGEMENT LEVER
12–Seal. 14–Clutch engagement lever. 15–Key.

8. Position the pinion engagement lever **(6)** in the clutch and transmission housing as shown in the illustration, aligning the shaft **(4)** properly with the lever.

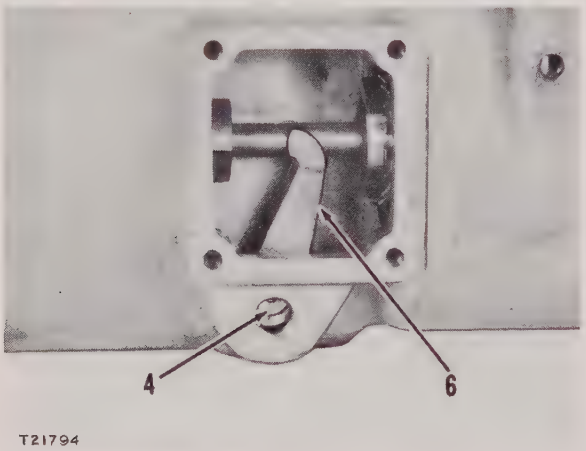

INSTALLING PINION ENGAGEMENT LEVER
4–Shaft. 6–Pinion engagement lever.

9. Install the shaft **(4)** into the pinion engagement lever **(6)**.

NOTE

One tooth of the serration on the shaft and two teeth on the lever have been omitted to assure proper positioning of the parts.

10. Install the clutch assembly and sliding gear in the reverse order of removal, aligning the groove **(A)** in the clutch engaging collar with the clutch engagement lever **(14)**.

11. Tighten the bolt that secures the clutch engagement lever **(14)**.

12. Install the gear shift lever and the cover, aligning the groove in the sliding gear with the shifter fork.

13. Install the clutch and transmission housing on the starting engine.

14. Install the starting engine on the diesel engine.

15. Install the block **(2)** on the lever **(1)**.

16. Place the lever **(1)** onto the shaft **(4)** without the key **(3)** and the clamping bolt loose.

17. Move the lever **(1)** toward the front of the engine until the clutch snaps into engagement. **This position of the shaft assembly (11) must be maintained throughout the entire procedure while making adjustments.**

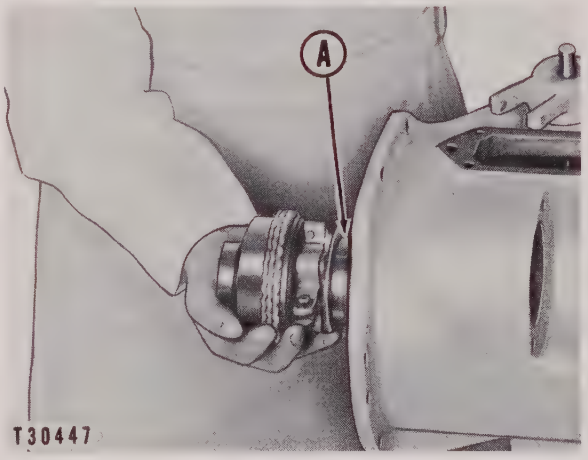

INSTALLING CLUTCH AND SLIDING GEAR
A–Groove.

18. Remove the lever **(1)** from the shaft.

19. Remove the block **(2)** from the lever.

20. Install the key **(3)** into the shaft **(4)** and install the lever **(1)**.

21. With the block removed, move the lever **(1)** toward the front of the engine far enough to engage the pinion latches.

22. Raise the lever **(1)** enough to permit the block **(2)**, lockwasher and nut to be installed and install them making sure the key **(3)** is still in place.

23. Rotate the block until a flat on the block has 1/64″ to 1/32″ gap between it and the finished flat, on the clutch engaged side of the lever of the shaft assembly **(11)**. Lever **(1)** and shaft assembly **(11)** should be all the way forward when measuring gap.

24. Tighten the nut that secures the block making sure that the block does not rotate, and tighten the clamping bolt on the lever.

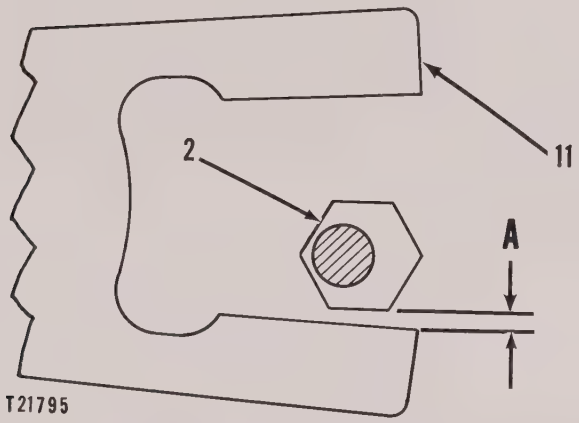

LOCATION TO CHECK ADJUSTMENT
A–Dimension of 1/64" to 1/32". 2–Block. 11–Shaft assembly.

Starting Mechanism

STARTER PINION

The starting engine transmits its power through a clutch and two-speed transmission to a sliding pinion, which is engaged with the diesel engine flywheel gear by means of linkage controlled by a hand lever. The pinion is automatically released by centrifugal force acting on the plunger-type pinion latch when the diesel engine starts.

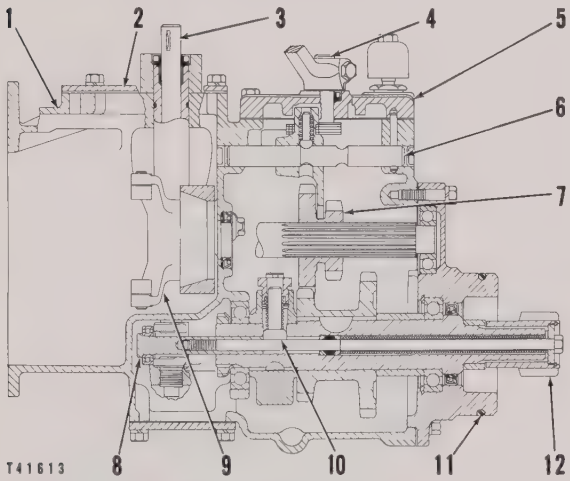

STARTING MECHANISM
1–Clutch and transmission housing. 2–Clutch inspection cover. 3–Pinion engaging shaft. 4–Transmission speed selector shaft. 5–Transmission inspection cover. 6–Shifter shaft. 7–Speed selector gear. 8–Pinion engaging collar. 9–Clutch fork. 10–Pinion latch. 11–Seal. 12–Pinion gear.

NOTE

Industrial and marine engines use a different housing which does not incorporate a seal **(11)**.

Operation

To engage the pinion **(9)**, the lever **(3)** must be moved toward the front end (to the left in illustration) of the housing **(1)**. The lever contacts the pinion engaging collar **(2)** which is connected to the internal shaft **(6)**; this in turn pulls the pinion **(9)** forward, compressing the spring **(5)**.

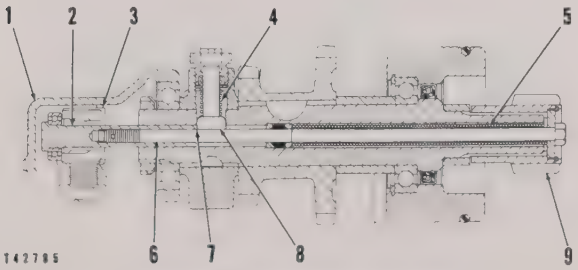

STARTER PINION OPERATION
1–Housing. 2–Pinion engaging collar. 3–Lever. 4–Spring. 5–Spring. 6–Internal shaft. 7–Shoulder. 8–Pinion latch. 9–Pinion.

The shaft **(6)** must be pulled into the housing far enough to permit the pinion latch **(8)** to snap into place over the shoulder **(7)** on the collar, thus securing the pinion in engagement with the ring gear on the diesel engine flywheel. The pinion is held engaged until centrifugal force on the latch overcomes the force of the spring **(4)** which allows the plunger-type latch **(8)** to release the internal shaft **(6)**, thus allowing the spring **(5)** to return the pinion to the disengaged position.

Removal and Installation

Remove the starting engine from the diesel engine. See the covering topic.

Remove the bolts which hold the pinion cover **(2)** to the clutch and transmission housing **(1)** and remove the pinion assembly.

NOTE

The starter pinion should be in the engaged position so that the pinion control lever will clear the pinion engaging collar **(3)**.

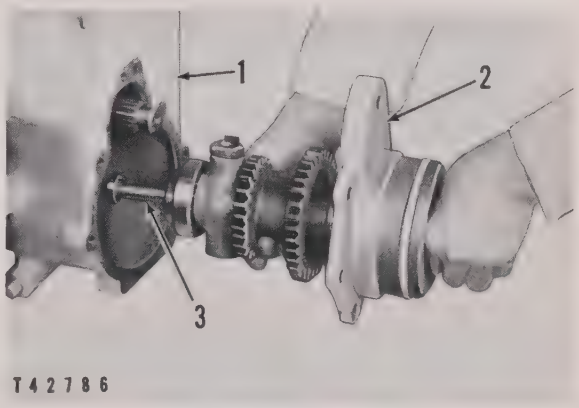

STARTER PINION REMOVAL
1–Clutch and transmission housing. 2–Pinion cover. 3–Pinion engaging collar.

Disassembly and Assembly

1. Turn the collar **(4)** off the internal shaft.

CAUTION

When removing the collar make provisions for containing the pinion, as the spring **(7)** will eject the internal shaft **(8)** and pinion **(3)** as an assembly.

2. Remove the internal shaft **(8)**, spring **(7)**, lock ring **(10)**, and washer **(9)** from the pinion **(3)**.

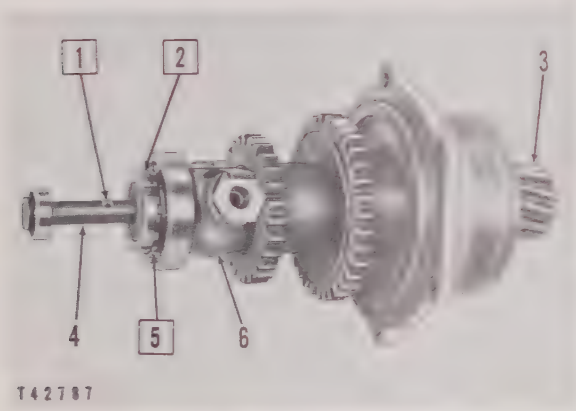

STARTER PINION DISASSEMBLY

☐ Remove

1–Spring pin. 2–Nut. 3–Pinion. 4–Collar. 5–Lock. 6–Carrier.

PINION AND SHAFT

3–Pinion. 7–Spring. 8–Internal shaft. 9–Washer. 10–Lock ring.

3. Remove the nut, spring and plunger from the carrier **(6)**.

4. Using a 7F9540 Hydraulic Push Puller, 8B7551 Attachment, 8B7548 Puller and 8B7549 Legs, pull the bearing **(11)**, carrier **(6)**, and gear cluster **(12)** from the external shaft as illustrated.

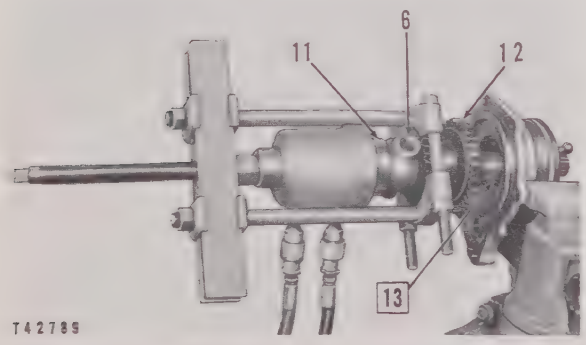

BEARING, CARRIER AND GEAR CLUSTER REMOVAL

☐ Remove

6–Carrier. 11–Bearing. 12–Gear cluster. 13–Spacer.

5. Remove the keys from the keyways in the external shaft beneath the carrier and gear cluster.

6. Hold the cover **(14)**, and tap on the small end of the external shaft **(18)** with a wooden mallet to force the shaft and bearing **(16)** from the cover.

7. Inspect the bearings **(15)** and **(16)** and replace if necessary.

8. Inspect the seal behind the bearing **(16)** and replace if leaking or damaged. The new seal should be installed with the lip toward the bearing **(16)** and with approximately .030″ clearance between the seal and bearing.

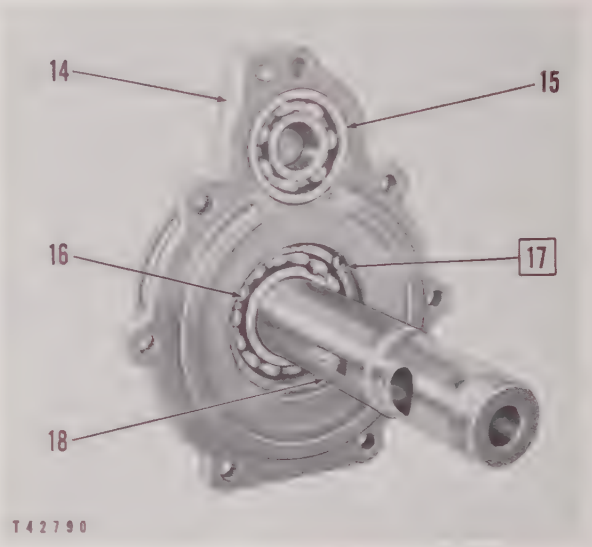

COVER DISASSEMBLY

☐ Remove

14–Cover. 15–Bearing. 16–Bearing. 17–Snap ring. 18–External shaft.

9. Inspect the packing **(20)** for signs of leaking. The packing can be removed and replaced using a punch and hammer.

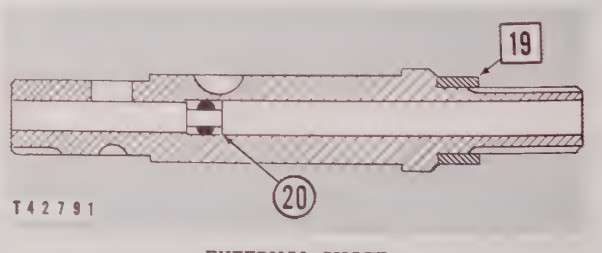

EXTERNAL SHAFT

☐ Remove

19–Spacer. 20–Packing.

10. Assemble and torque the nut **(2)** to the value listed in the topic, SPECIFICATIONS. Secure the nut with the lock **(5)**.

11. Install the collar **(4)** onto the internal shaft **(8)** so that dimension A, between the pinion **(3)** and spacer **(19)**, is .010″ to .020″. This measurement is made with the pinion latch **(22)** engaged.

12. Drill a 1/8″ hole through the collar **(4)** and internal shaft **(8)** at a point approximately 1.547″ (dimension B) from the rear of the collar bearing **(21)**.

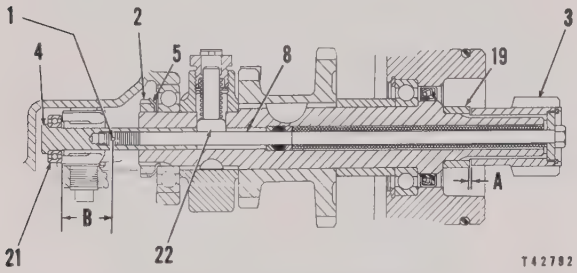

STARTER PINION ASSEMBLY
1–Spring pin. 2–Nut. 3–Pinion. 4–Collar. 5–Lock. 8–Internal shaft. 19–Spacer. 21–Collar bearing. 22–Pinion latch. A–.010″ to .020″. B–1.547″.

13. Install the spring pin **(1)** and stake the metal at both ends of drilled hole to secure the pin.

Pinion Latch Adjustment

With the starter pinion removed place the assembly in a vise as shown.

NOTE

It is not necessary to remove the starter pinion to make the pinion latch adjustment. This adjustment can be made while the starting engine is mounted to the diesel engine by reaching through the starting engine transmission top cover.

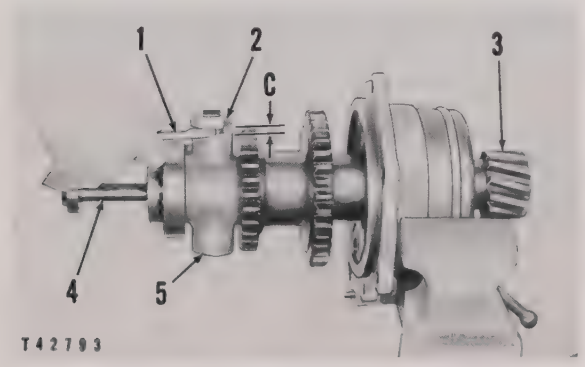

STARTER PINION ADJUSTMENT
1–Thickness gauge. 2–Nut. 3–Pinion. 4–Collar. 5–Carrier. C–3/16″.

Place the pinion **(3)** in the engaged position so that the plunger in the carrier **(5)** snaps into place over the shoulder on the collar **(4)**.

Turn the nut **(2)** down until there is 3/16″ space (dimension C) between the face of the carrier **(5)** and the nut. Measure with a thickness gauge **(1)** as shown.

TRANSMISSION SHIFT LEVER AND COVER REMOVAL AND DISASSEMBLY

1. Remove the bolts **(1)** holding the cover **(2)** to the housing **(3)** and remove the cover.

2. Loosen the locknut **(8)** holding the gear shift lever **(7)** to the shaft **(4)** and remove the lever.

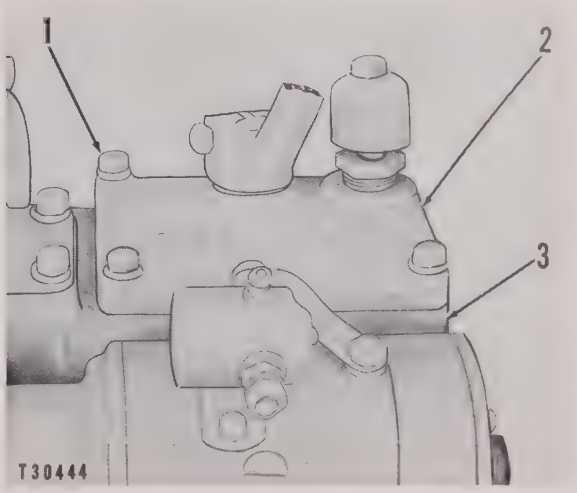

TRANSMISSION SHIFT LEVER AND COVER
1–Bolt. 2–Cover. 3–Housing.

3. Remove the key **(5)** from the shaft.

4. Remove the shaft from the cover.

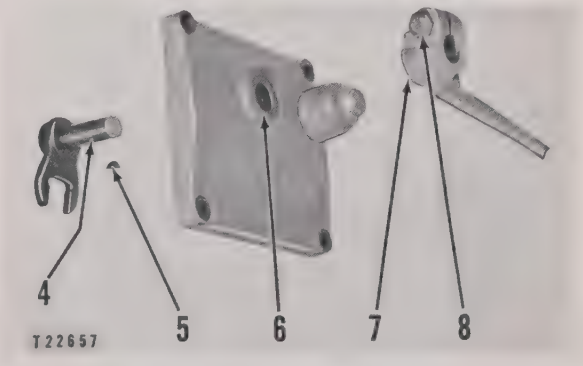

TRANSMISSION SHIFT LEVER AND COVER ASSEMBLY
4–Shaft. 5–Key. 6–Seal. 7–Lever. 8–Nut.

5. If the seal **(6)** is to be replaced, install it with the lip toward the outside of the transmission.

TRANSMISSION SHIFTING MECHANISM DISASSEMBLY

1. Remove the shift lever and cover. See the topic, TRANSMISSION SHIFT LEVER AND COVER REMOVAL.
2. Remove the pin **(2)** holding the shaft in the housing.
3. Using a drift punch, through the clutch housing, drive against the forward expansion plug forcing it, the shaft **(4)** and the rear expansion plug **(1)** out of the housing.

CAUTION

Be sure to remove the forward expansion plug from the transmission before reassembly.

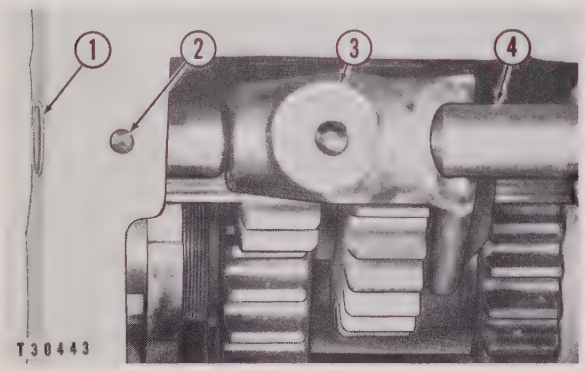

STARTING ENGINE TRANSMISSION
1–Expansion plug. 2–Pin. 3–Shifter fork. 4–Shaft.

4. After the shaft is about one-half of the way out of the housing, slide the shifter fork **(3)** from the shaft and complete the removal of the shaft.

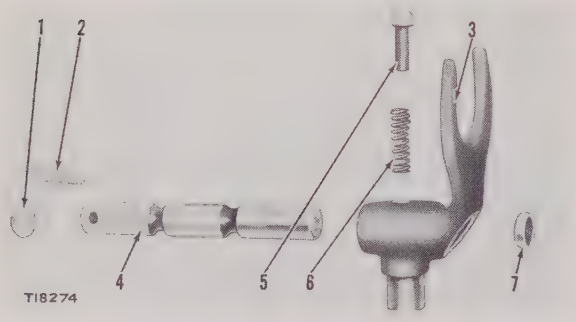

TRANSMISSION SHIFTING MECHANISM
1–Expansion plug. 2–Pin. 3–Shifter fork. 4–Shaft. 5–Plunger. 6–Spring. 7–Expansion plug.

CLUTCH AND PINION ENGAGEMENT MECHANISM

The clutch is of the oil type with three outer discs **(2)** and two inner discs **(3)**. A braking cone **(4)**, in moving toward a stationary cone in the housing, disengages the clutch dogs and then stops the shaft from rotating. The starter pinion can then be engaged with the ring gear. The bearing **(1)** pilots the clutch in the flywheel.

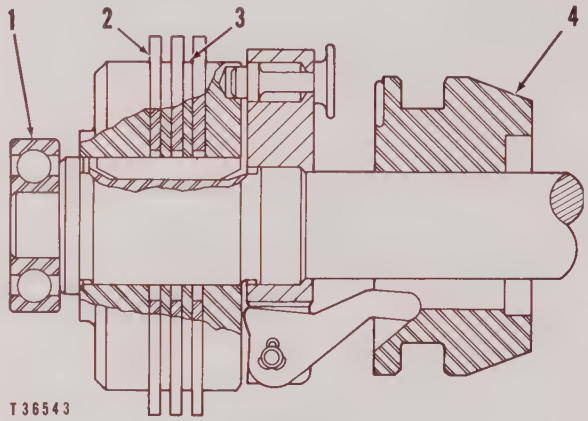

CLUTCH
1–Bearing. 2–Outer disc. 3–Inner disc. 4–Brake cone.

Removal

1. Remove the starting engine from the diesel engine.

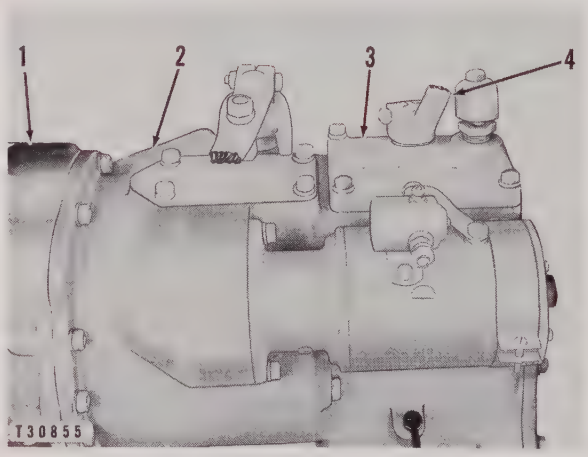

PREPARING TO REMOVE CLUTCH AND TRANSMISSION HOUSING
1–Cylinder block. 2–Clutch and transmission housing. 3–Cover. 4–Gear shift lever.

2. Engage the starting engine clutch to keep the clutch discs aligned. This will facilitate installation of the clutch.
3. Remove the bolts and nuts that secure the clutch and transmission housing **(2)** to the cylinder block **(1)** and the oil pan.
4. Remove the clutch and transmission housing.
5. Remove the cover **(3)** and the gear shift lever **(4)** as a unit.

6. Loosen the clamp bolt and remove the lever from the top of the shaft **(6)**.

7. Remove the clutch assembly, holding the sliding gear so it cannot drop and damage the teeth of the gear.

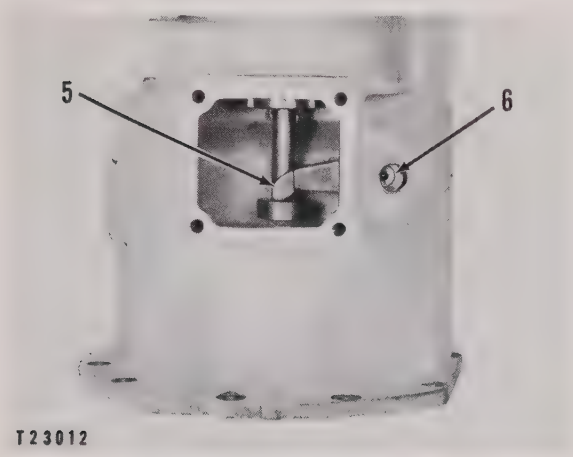

PREPARING TO REMOVE PINION ENGAGEMENT LEVER
5–Pinion engagement lever. 6–Shaft.

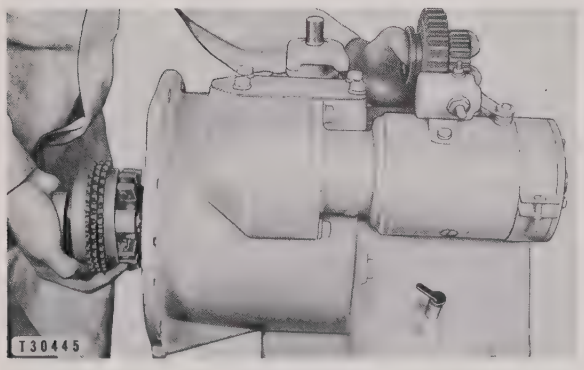

CLUTCH REMOVAL

8. Loosen the bolt in the clutch engagement lever **(8)**.

9. Remove the plug and cover from the bottom of the housing and drive the shaft **(6)** along with shaft **(10)** out of the pinion engagement lever **(5)**.

10. Move the lever **(7)**, shaft **(10)** and the shaft **(6)** far enough from the clutch and transmission housing so that the seal **(9)** can be removed from the shaft.

11. Slide the clutch engagement lever **(8)** toward the serrated end of the shaft **(6)** and remove the key **(11)** from the shaft **(10)**.

12. Remove the shafts from the clutch and transmission housing and then remove the clutch engagement lever **(8)**.

13. Remove the ring on the lower portion of the shaft **(6)** and separate the shaft **(6)** from shaft **(10)**.

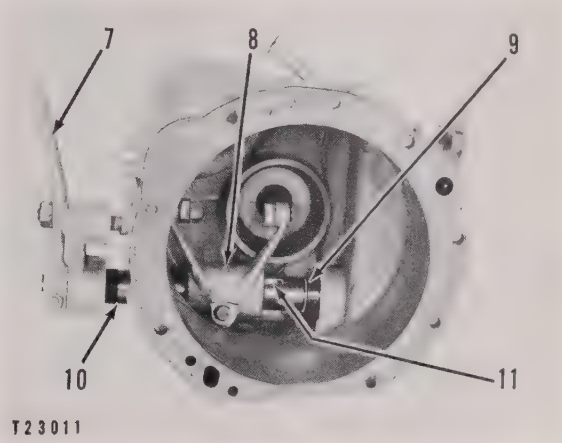

PREPARING TO REMOVE SHAFTS AND CLUTCH ENGAGEMENT LEVER
7–Lever. 8–Clutch engagement lever. 9–Seal. 10–Shaft. 11–Key.

14. The seal and bearings in the shaft **(10)** can be removed if worn or damaged.

Clutch Disassembly and Assembly

1. Disengage the clutch and remove the throw-out collar **(11)**.

2. Pull the clutch adjusting lock pin **(10)** and turn the spider assembly **(4)** counterclockwise to remove it from the shaft.

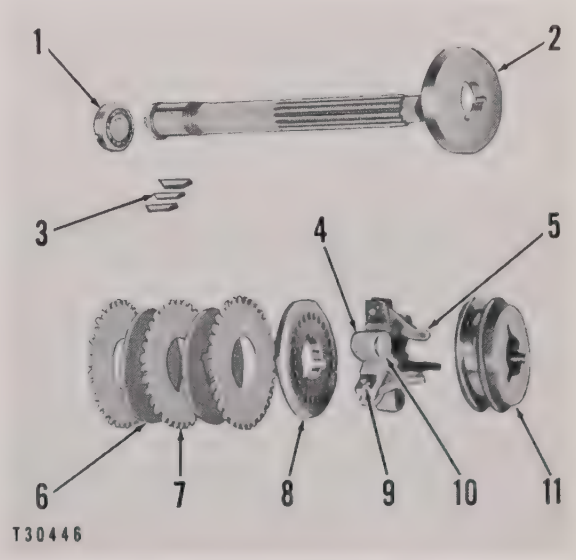

CLUTCH DISASSEMBLY
1–Bearing. 2–Front plate. 3–Keys. 4–Spider assembly. 5–Dog. 6–Inner plate. 7–Outer plate. 8–Lock plate. 9–Pin. 10–Lock pin. 11–Throw-out collar.

3. The dogs **(5)** can be removed by removing the cotter pins and pins **(9)**.
4. Remove the adjusting lock plate **(8)**.
5. Remove the inner discs **(6)** and outer discs **(7)**.
6. Remove the front plate **(2)**.
7. Remove the keys **(3)** from the shaft.
8. Remove the bearing **(1)** from the shaft.
9. The braking cone which is part of the collar **(11)** works against a cone which is fastened to the clutch housing by two bolts.

CAUTION

When installing the cone in the clutch housing, do not tighten the bolts holding it.

10. After assembling the clutch and installing it in the clutch housing, install the clutch housing to the cylinder block and oil pan. The final adjustment can then be made. It should require a distinct snapover to engage and disengage the clutch when it is properly adjusted.
11. Adjustment is made by pulling the clutch adjusting pin **(10)** and turning the spider assembly **(4)** clockwise to tighten the clutch, or counterclockwise to loosen.
12. After the clutch has been installed in the housing, and the housing installed to the cylinder block and oil pan, engage the clutch brake and then tighten the bolts holding the brake cone to the clutch housing. This will center the cone in relationship to the collar **(11)**.

Installation and Adjustment

1. Press the bearings **(8)** and **(13)** into the shaft assembly **(11)** until they are bottomed.

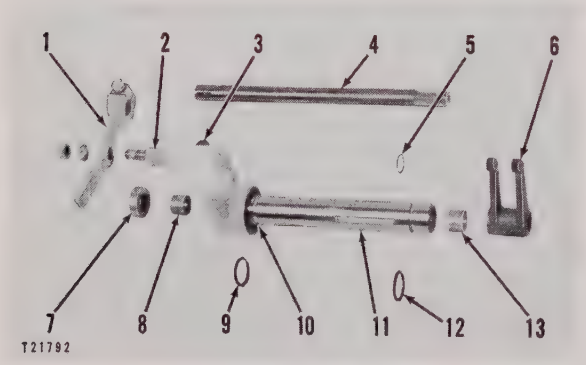

PREPARING TO INSTALL PARTS
1–Lever. 2–Block. 3–Key. 4–Shaft. 5–Ring. 6–Pinion engagement lever. 7–Seal. 8–Bearing. 9–Seal. 10–Groove. 11–Shaft assembly. 12–Seal. 13–Bearing.

2. With the lip of the seal turned out, press the seal **(7)** into the bore of the shaft assembly.
3. Install the ring **(5)** into the groove of the shaft **(4)**, then place the shaft into the shaft assembly **(11)**.
4. Install the seal **(9)** onto the shaft assembly and into the groove **(10)**.
5. Start the shafts into the bore of the clutch and transmission housing and install the clutch engagement lever **(14)** on the shaft.

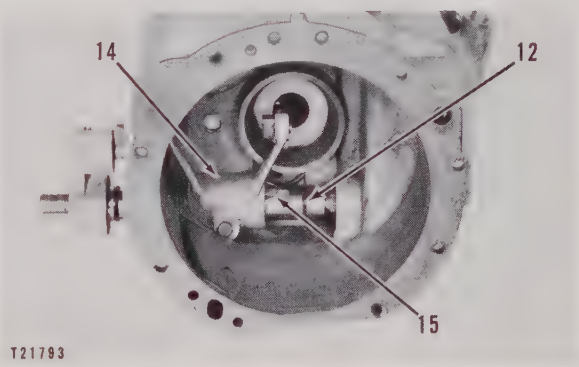

INSTALLING SHAFT AND CLUTCH ENGAGEMENT LEVER
12–Seal. 14–Clutch engagement lever. 15–Key.

6. Move the clutch engagement lever **(14)** toward the serrated end of the shaft **(4)** until the key **(15)** can be installed in the keyway of the shaft assembly **(11)**.
7. Move the clutch engagement lever over the key and install the seal **(12)**.

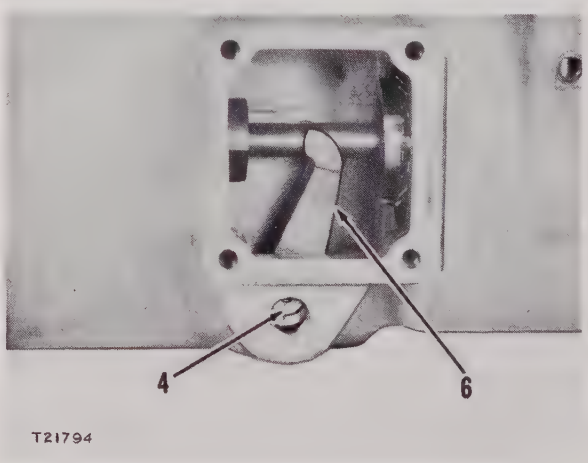

INSTALLING PINION ENGAGEMENT LEVER
4–Shaft. 6–Pinion engagement lever.

8. Position the pinion engagement lever **(6)** in the clutch and transmission housing as shown in the illustration, aligning the shaft **(4)** properly with the lever.

9. Install the shaft **(4)** into the pinion engagement lever **(6)**.

NOTE

One tooth of the serration on the shaft and two teeth on the lever have been omitted to assure proper positioning of the parts.

10. Install the clutch assembly and sliding gear in the reverse order of removal, aligning the groove **(A)** in the clutch engaging collar with the clutch engagement lever **(14)**.

11. Tighten the bolt that secures the clutch engagement lever **(14)**.

12. Install the gear shift lever and the cover, aligning the groove in the sliding gear with the shifter fork.

13. Install the clutch and transmission housing on the starting engine.

14. Install the starting engine on the diesel engine.

15. Install the block **(2)** on the lever **(1)**.

16. Place the lever **(1)** onto the shaft **(4)** without the key **(3)** and the clamping bolt loose.

17. Move the lever **(1)** toward the front of the engine until the clutch snaps into engagement. This position of the shaft assembly **(11)** must be maintained throughout the entire procedure while making adjustments.

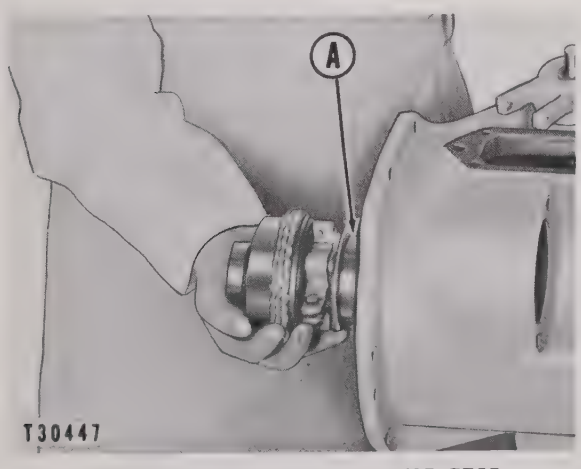

INSTALLING CLUTCH AND SLIDING GEAR
A–Groove.

18. Remove the lever **(1)** from the shaft.

19. Remove the block **(2)** from the lever.

20. Install the key **(3)** into the shaft **(4)** and install the lever **(1)**.

21. With the block removed, move the lever **(1)** toward the front of the engine far enough to engage the pinion latch.

22. Raise the lever **(1)** enough to permit the block **(2)**, lockwasher and nut to be installed and install them making sure the key **(3)** is still in place.

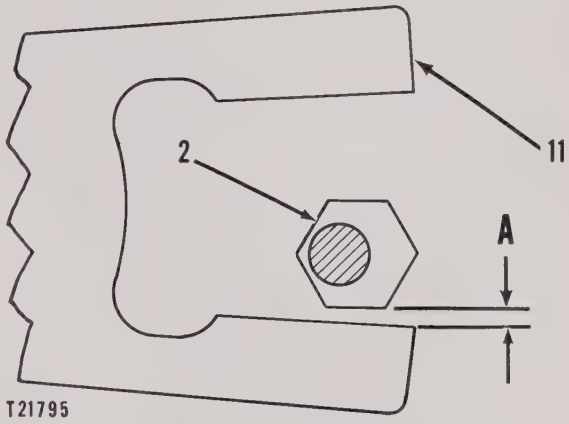

LOCATION TO CHECK ADJUSTMENT
A–Dimension of 1/64" to 1/32". 2–Block.
11–Shaft assembly.

23. Rotate the block until a flat on the block has 1/64" to 1/32" gap between it and the finished flat, on the clutch engaged side of the lever of the shaft assembly **(11)**. Lever **(1)** and shaft assembly **(11)** should be all the way forward when measuring gap.

24. Tighten the nut that secures the block making sure that the block does not rotate, and tighten the clamping bolt on the lever.

25. On tractor applications, push the clutch and pinion control lever in, to the brake applied position. Adjust the linkage to obtain a dimension of approximately 3" from the center of the control handle to the face of the dash.

Service Manual
Section Index Tab
FORM 34261-12

HC632494

ISSUED 4-62

ATTACHMENTS

TABLE OF CONTENTS

	Section	Group
Flywheel Clutch	3A-220	80
Auxiliary Drive	3A-220	110
Auxiliary Drive (Later)	3A-220	110.1
Bilge Pump and Drive	3A-220	120
Electric Starting Motors	3A-220	140
Marine Gear	3A-220	150
Generator	3A-220	160
Generator (Later)	3A-220	160.1
Torque Converter	3A-220	170
Water Temperature Shut-off Control Valve	3A-220	200
Water Temperature Shut-off Control Valve (Later)	3A-220	200.1
Safety Shut-off Controls	3A-220	215
Safety Shut-off Controls (Later)	3A-220	215.1
Governors Air Actuator	3A-220	240
Torque Converter Output Shaft Governor	3A-220	250.1
Air Starting System	3A-220	290
Fuel Priming Pump	3A-220	300
Flexible Drive Coupling	3A-220	320

Flywheel Clutch

OPERATION AND LUBRICATION

The clutch is the dry, snap-over-center type. The coupling **(1)** is fastened to the flywheel by bolts. The coupling transmits the power to three lined driving plates **(2)**. These plates and coupling turn whenever the engine is running. The clutch is engaged by moving the collar assembly **(18)** and the sleeve **(17)** forward, which actuates four levers **(4)**. These levers move the driven plate **(3)** forward, compressing the driving plates **(2)** between the center driven plates **(11)** and the driven plate **(10)**. Power is then transmitted to the shaft **(14)** through the driven plates **(3)** and **(11)**, which are engaged to the plate **(10)** by means of teeth. Plate **(10)** drives shaft **(14)** through key **(5)**.

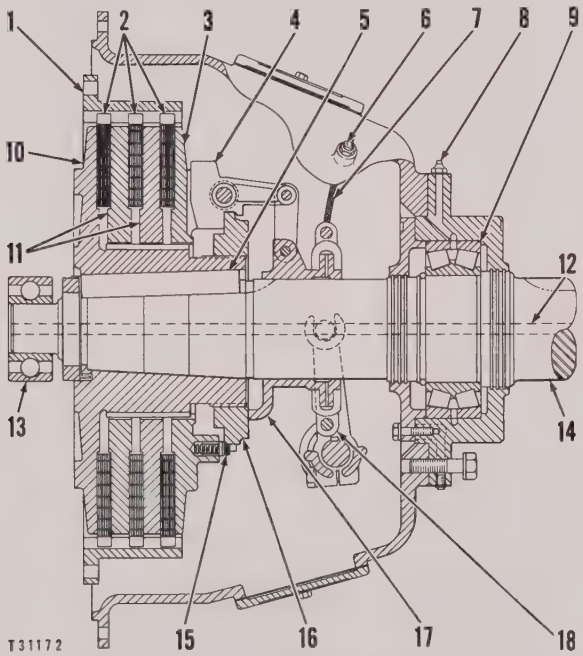

OPERATION AND LUBRICATION
1–Coupling. 2–Driving plates. 3–Driven plate. 4–Lever. 5–Key. 6–Fitting. 7–Hose. 8–Fitting. 9–Bearing. 10–Driven plate. 11–Driven plates. 12–Grease passage. 13–Pilot bearing. 14–Shaft. 15–Pin. 16–Adjusting ring. 17–Sleeve. 18–Collar assembly.

The clutch is lubricated through three fittings. The fitting in the exposed end of the shaft lubricates the pilot bearing **(13)** by means of the horizontal passage **(12)**. If this fitting is not accessible, the pilot bearing is lubricated by a fitting in the flywheel housing. The fitting **(8)** lubricates the spherical bearing **(9)** which supports the shaft **(14)**. The fitting **(6)** on the clutch housing connects to the hose **(7)** and lubricates the collar assembly **(18)** that actuates the sleeve **(17)**.

The clutch is adjusted by pushing the spring-loaded pin **(15)** in and rotating the adjusting ring **(16)**. Turn the adjusting ring clockwise to tighten the adjustment, and counterclockwise to loosen the adjustment.

REMOVAL AND INSTALLATION

1. Engage the clutch to hold the clutch plates in alignment.

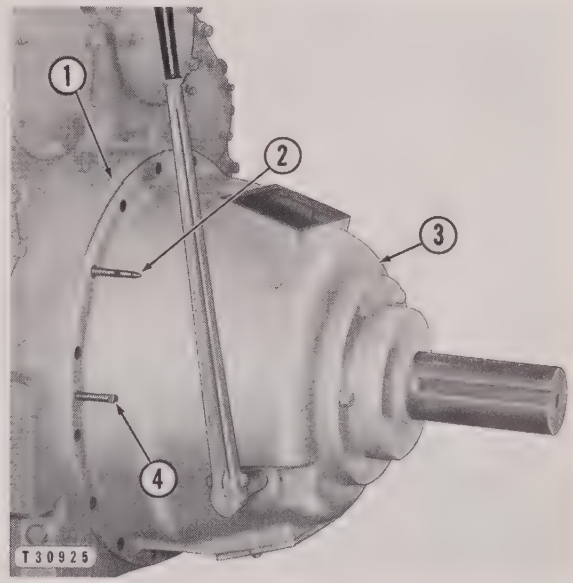

PREPARING TO REMOVE FLYWHEEL CLUTCH
1–Flywheel housing. 2–Guide pin. 3–Clutch housing. 4–Puller bolt.

2. Remove two of the bolts that hold the clutch housing **(3)** to the flywheel housing **(1)** and install two guide pins **(2)** as shown.
3. Remove the remaining bolts that hold the clutch housing to the flywheel housing. The guide pins will support the weight of the clutch housing.

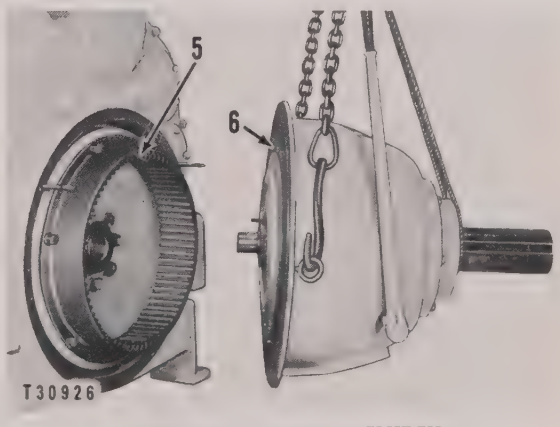

REMOVING FLYWHEEL CLUTCH
5–Clutch driving coupling. 6–Driven plate.

4. Install two ½" - 13 (NC) puller bolts **(4)** in the puller holes of the clutch housing flange, and separate the clutch from the flywheel housing.

NOTE

Should the teeth of the clutch driving coupling **(5)** bind with the teeth of the driven plates **(6)**, making it impossible to remove the clutch housing, see the alternate removal method.

5. Attach a suitable hoist and cable as illustrated, and remove the clutch from the flywheel housing.

NOTE

The clutch assembly weighs approximately 800 pounds.

6. Remove the bolts **(7)** and remove the clutch driving coupling from the flywheel.

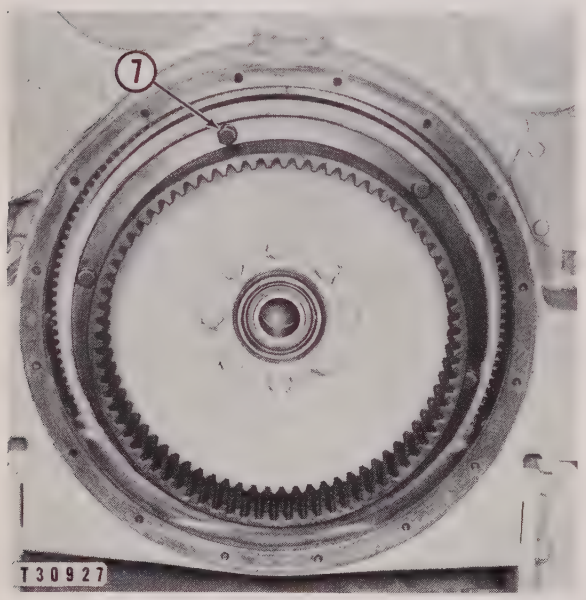

CLUTCH DRIVING COUPLING REMOVAL
7–Bolt.

7. Install in the reverse order of removal. Tighten the bolts evenly and diametrically.

REMOVAL AND INSTALLATION (ALTERNATE METHOD)

1. Engage the clutch to hold the clutch plates in alignment.
2. Remove the inspection cover and remove the bolts **(1)** that hold the clutch driving coupling to the engine flywheel.
3. Remove two of the bolts that hold the clutch housing **(2)** to the flywheel housing **(4)** and install two guide pins **(3)** as shown.
4. Remove the remaining bolts that hold the clutch housing to the flywheel housing. The guide pins will carry the weight of the clutch housing.
5. Install two ½" - 13 (NC) puller bolts in the puller holes of the clutch housing flange and separate the clutch housing from the flywheel housing. Attach a suitable hoist and cable as illustrated and remove the clutch from the flywheel housing.

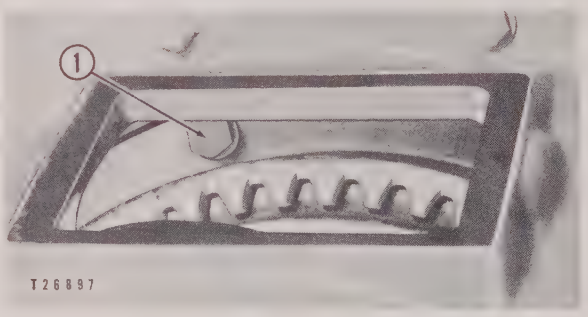

PREPARING TO REMOVE FLYWHEEL CLUTCH
1–Bolt.

NOTE

The clutch driving coupling **(5)** can be bolted to the diesel engine flywheel before the clutch is installed.

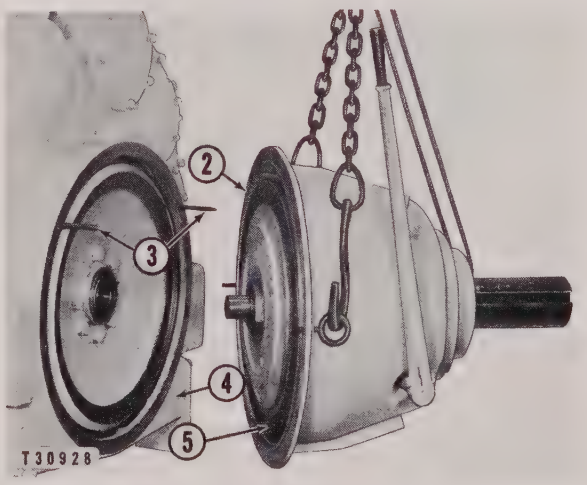

REMOVING FLYWHEEL CLUTCH
2–Clutch housing. 3–Guide pins. 4–Flywheel housing. 5–Driving coupling.

6. If it is necessary to remove the pilot bearing **(7)** from the flywheel housing, use the 8B7548 No. 4 Push-puller with two 5F7369 Legs, and the 8B7554 Bearing Cap Pulling Attachment with the 8B7553 Adapter.

7. When installing, tighten the bolts evenly and diametrically to prevent distortion of the clutch.

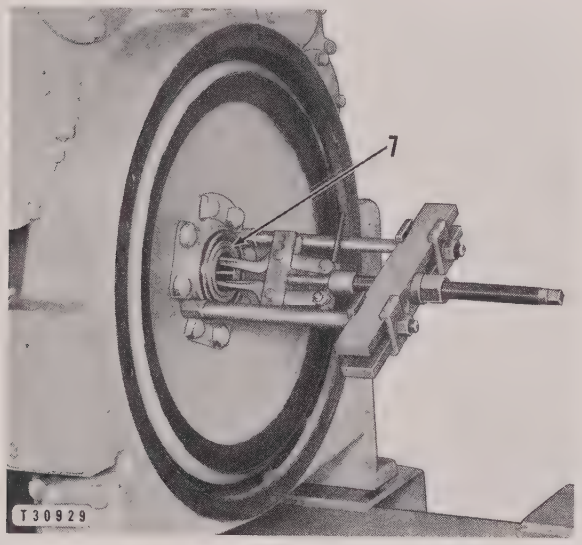

REMOVING PILOT BEARING
7–Pilot bearing.

Auxiliary Drive

The auxiliary drive provides a means of mounting and driving many engine attachments. It can be mounted on either the left side or right side of the flywheel housing.

An idler gear **(5)** driven by the timing gears is mounted in the timing gear housing and drives the left side auxiliary drive when used. The auxiliary drive on the right side is driven directly by the timing gears.

The auxiliary drive covered in this topic is mounted on the left side of the flywheel housing. Engines that do not require an auxiliary drive have a cover installed in its place.

The drive pulley **(1)** transmits the power to an auxiliary unit through V-belts. The pulley rotates at twice engine speed. The idler gear **(5)** is supported by the shaft **(8)** which bolts to the front side of the flywheel housing. The drive pulley shaft **(10)** is supported by the bearings **(9)** and **(11)**, and the adapter **(2)** which bolts to the rear side of the flywheel housing. The idler gear drives the gear **(12)** which is keyed to the drive pulley shaft to transmit power to the drive pulley.

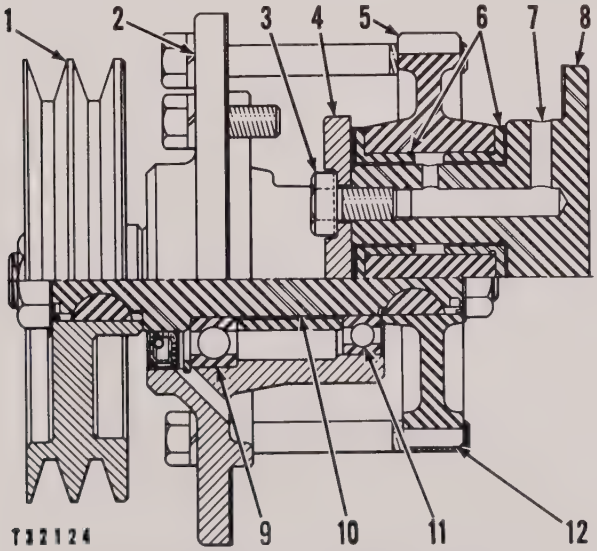

CROSS SECTION OF AUXILIARY DRIVE
1–Drive pulley. 2–Adapter. 3–Bolt. 4–Washer. 5–Idler gear. 6–Bearings. 7–Passage. 8–Shaft. 9–Bearing. 10–Drive pulley shaft. 11–Bearing. 12–Gear.

The idler gear **(5)** is secured on the shaft **(8)** by the washer **(4)** and a lock and bolt **(3)**. The washer is held in position by a pin that fits in a hole in the shaft. The idler gear bearings **(6)** are lubricated by the oil passage **(7)** in the shaft.

REMOVAL AND INSTALLATION

Back the bolts **(1)** out evenly until the auxiliary drive adapter **(3)** can be removed.

NOTE

The bolts **(1)** will not clear the pulley **(2)** for removal.

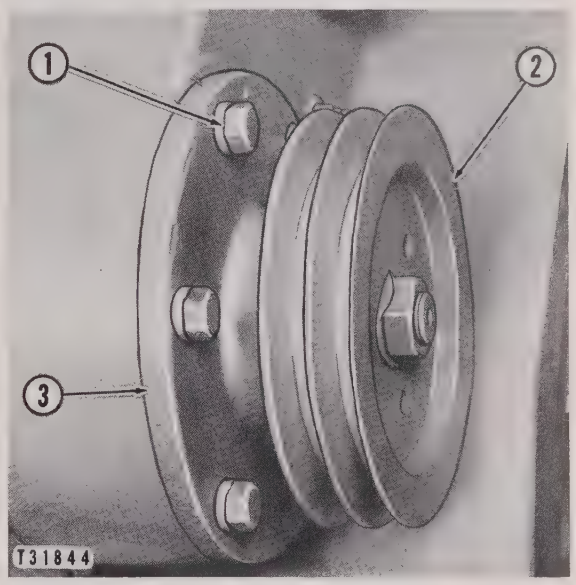

AUXILIARY DRIVE REMOVAL
1–Bolt. 2–Pulley. 3–Auxiliary drive adapter.

Install in the reverse order of removal, using a new gasket between the auxiliary drive and flywheel housing if necessary.

AUXILIARY DRIVE IDLER GEAR REMOVAL AND INSTALLATION

1. Remove the cover **(2)**.
2. Working through the opening under the cover **(2)**, bend the lock **(1)** and remove the bolt which holds the washer **(3)** and the idler gear **(4)** in place on the idler gear shaft and remove the retainer.

NOTE

The idler gear shaft **(6)** is doweled to the timing gear housing, properly locating a drilled oil passage in the shaft with a drilled oil passage in the timing gear housing. This passage provides oil under pressure to lubricate the auxiliary drive idler gear bearing and shaft.

3. Remove the bolts **(5)** which hold the shaft **(6)** in place in the timing gear housing.

4. Slide the shaft **(6)** out the front side of the timing gear housing. At the same time, reach through the opening **(7)** and remove the idler gear.

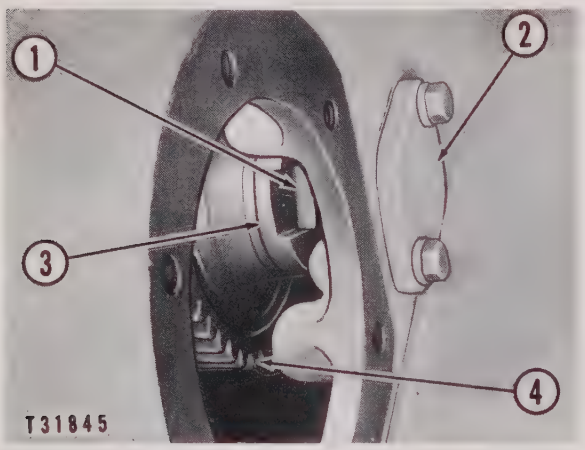

PREPARING TO REMOVE IDLER GEAR
1–Lock. 2–Cover. 3–Washer. 4–Gear.

5. Inspect the bearings in the gear and replace if worn or damaged.

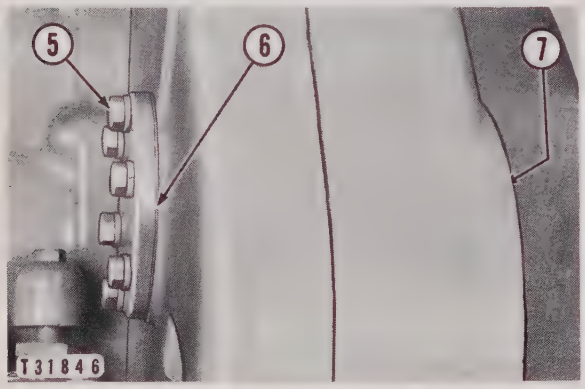

IDLER GEAR REMOVAL
5–Bolt. 6–Shaft. 7–Opening.

6. Install in the reverse order of removal, using new gaskets when needed.

Auxiliary Drive

The auxiliary drive provides a means of mounting and driving many engine attachments. It can be mounted on either the left side or right side of the flywheel housing.

The auxiliary drive covered in the topic is mounted on the right side of the flywheel housing and is driven directly by the timing gears. Engines that are not equipped with an auxiliary drive have a cover installed in its place.

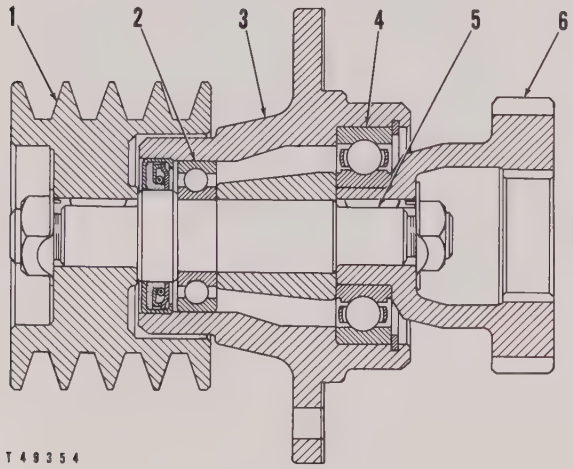

CROSS SECTION OF AUXILIARY DRIVE
1–Drive pulley. 2–Bearing. 3–Adapter. 4–Bearing. 5–Drive pulley shaft. 6–Gear.

The timing gear drives the gear **(6)** which is keyed to the drive pulley shaft **(5)**. The drive pulley shaft **(5)** is supported by the bearings **(2)** and **(4)** and the adapter **(3)** which bolts to the rear of the flywheel housing. The drive pulley **(1)** is keyed to the drive pulley shaft and transmits power to an auxiliary unit through V-belts. The drive pulley rotates at 2.438 times engine speed.

REMOVAL AND INSTALLATION

Inspect gasket for damage and replace if necessary.

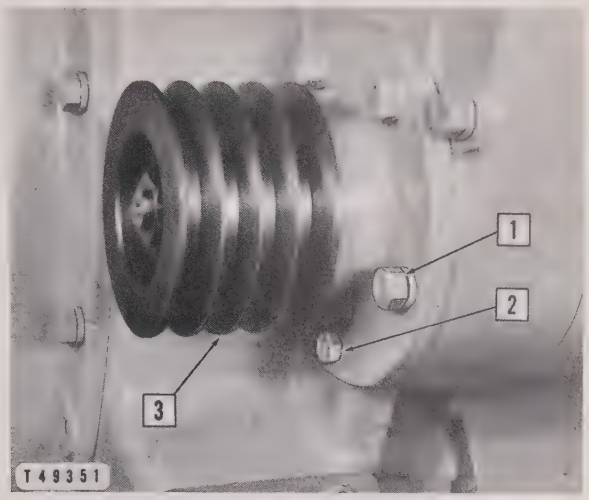

PREPARING TO REMOVE AUXILIARY DRIVE

☐ **Remove**

1–Bolt (four). 2–Bolt. 3–Auxiliary drive.

DISASSEMBLY AND ASSEMBLY

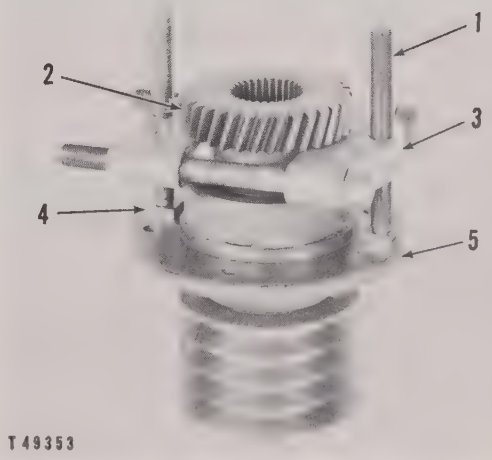

REMOVING GEAR
1–8B7552 Forcing Bolt. 2–Gear. 3–8B7551 Bearing Puller Attachment. 4–Spacer. 5–Adapter.

1. Remove the nut and lock which hold the gear **(2)** on the shaft.
2. Using an 8B7551 Bearing Pulling Attachment and two 8B7552 Forcing Bolts, remove the gear **(2)** from the shaft and the key under the gear.

NOTE

Install spacer **(4)** under the forcing screws to avoid damaging the machined surfaces of the adapter **(5)**.

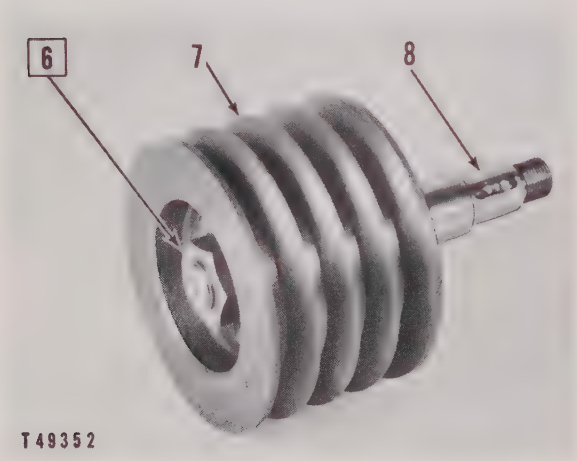

REMOVING DRIVE PULLEY AND SHAFT

☐ **Remove**

6–Nut. 7–Drive pulley. 8–Shaft.

3. Place the assembly in an arbor press and remove the drive pulley and the shaft as an assembly.
4. Using an arbor press, remove the shaft **(8)** from the pulley **(7)** and remove the key under the pulley.

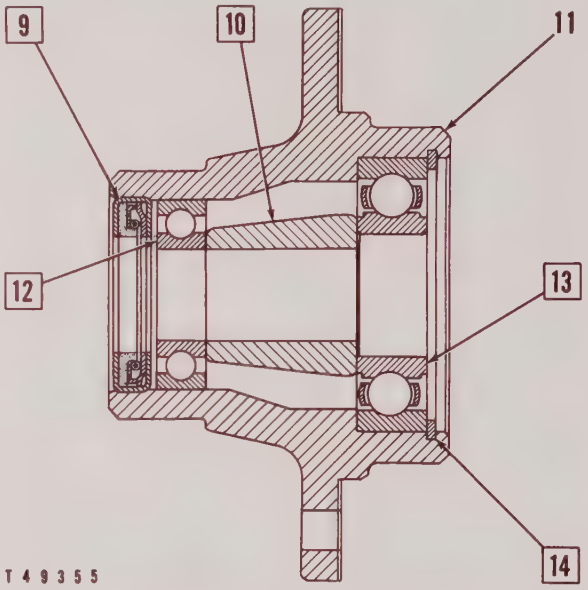

DISASSEMBLING ADAPTER ASSEMBLY

☐ **Remove**

9–Seal. 10–Spacer. 11–Adapter. 12–Bearing. 13–Bearing. 14–Snap ring.

5. Inspect all parts and seals for damage or wear and replace if necessary.

NOTE

If the seal **(9)** is to be replaced, install it with the lip of the seal facing toward the bearing as illustrated.

Bilge Pump and Drive

The bilge pump is driven by a pulley **(1)** through two belts driven by the diesel engine auxiliary drive. The pump is engaged by a separate clutch **(2)** located on the pump.

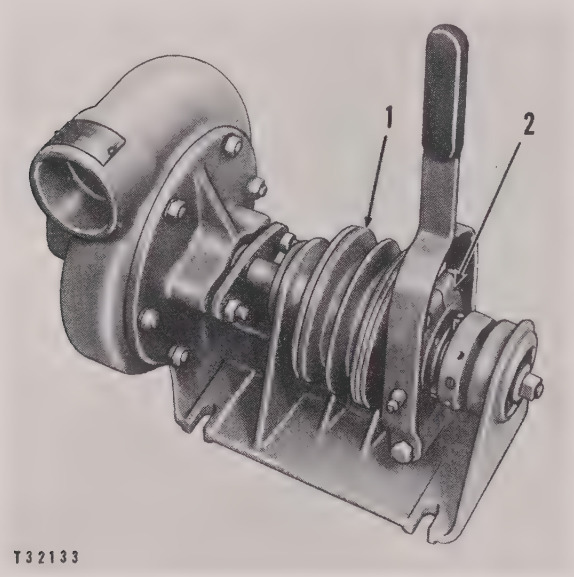

BILGE PUMP AND DRIVE
1–Pulley. 2–Clutch.

The foot valve incorporated in the inlet strainer enables the pump to retain its prime from operation to operation.

DISASSEMBLY AND ASSEMBLY

1. Remove the nuts and washers which secure the pump housing **(24)** to the body **(23)**.
2. Remove the pump housing by tapping it lightly with a hammer.
3. Disengage the clutch.
4. Remove the cotter pin and washer which secure the shaft **(18)** and remove the shaft.
5. Remove the nut **(14)** and washer **(13)**.
6. Loosen the nuts which secure the packing gland **(22)** and move the gland away from the packing **(9)**.
7. Press the shaft assembly **(12)** out of the bearings **(11)** and **(20)** and from the body **(23)**.

NOTE

The impeller is part of the shaft assembly and is not serviced separately.

8. Remove the clutch assembly as a unit.
9. Press our the bearing **(11)** and spacer **(16)**. The spacer can then be pressed from the bearing.

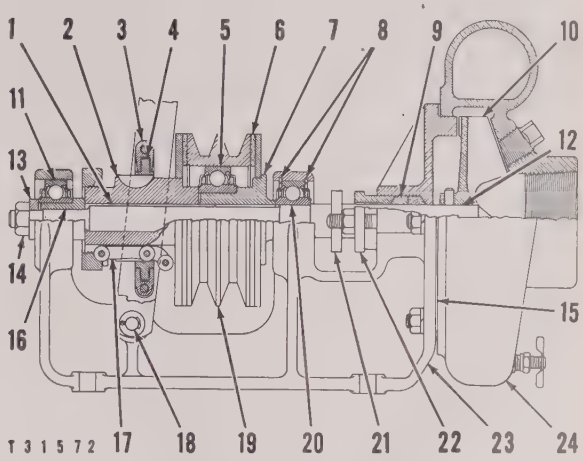

BILGE PUMP AND DRIVE
1–Key. 2–Hub. 3–Collar. 4–Sleeve. 5–Bearing. 6–Clutch facing. 7–Hub. 8–Snap rings. 9–Packing. 10–Impeller. 11–Bearing. 12–Shaft assembly. 13–Washer. 14–Nut. 15–Gaskets. 16–Spacer. 17–Lever. 18–Shaft. 19–Pulley. 20–Bearing. 21–Slinger. 22–Packing gland. 23–Body. 24–Pump housing.

10. Remove the snap rings **(8)** from both sides of the bearing **(20)** and press the bearing from the body.

NOTE

It is not necessary to remove the packing gland and packing unless the packing is to be replaced.

11. To replace the clutch facing **(6)**, slide the pulley **(19)** off of the bearing **(5)**, and remove the bearing from the hub **(7)**.

CAUTION

When the collar **(3)** and the sleeve **(4)** are removed from the hub **(2)**, the levers **(17)** and the rollers will fall out.

12. Remove the bolts from the collar to remove it from the sleeve. Do not lose the shims which are located between the two halves of the collar.
13. When assembling the pump and drive, first install the bearing **(20)** and the snap rings **(8)**.
14. Place the clutch assembly in position in the body and insert the shaft through the packing, packing gland, slinger **(21)**, bearing and clutch.
15. Line up the keyway in the shaft with the keyway in the hubs and install the key **(1)** through the bore for the bearing **(11)**.

16. Install the bearing **(11)**, washer **(13)**, and nut **(14)**.

17. Place the gaskets **(15)** on the studs of the housing **(24)** and install the housing, making sure there is clearance between the impeller **(10)** and the housing. Add gaskets, if necessary, to obtain more clearance.

18. With the pump in operation, tighten the packing gland **(22)** until any leakage is stopped.

FOOT VALVE AND STRAINER DISASSEMBLY AND ASSEMBLY

1. Remove the screws which secure the base **(6)** to the cap **(1)**.

2. Remove the screws or bolts if the base is secured to a mount, then remove the base.

3. Remove the nut and lockwasher which secure the screw **(4)**, and remove the screw and bushing **(8)**.

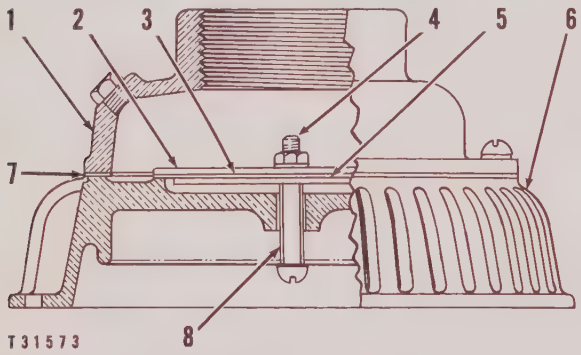

FOOT VALVE AND STRAINER
1–Cap. 2–Plate. 3–Seal. 4–Screw. 5–Washer. 6–Base. 7–Gasket. 8–Bushing.

4. Remove the plate **(2)**, seal **(3)** and the washer **(5)**.

5. Remove all deposits of rust and scale, making sure all mating surfaces are smooth and clean.

6. Install a new seal **(3)** and gasket **(7)** at the time of assembly.

Electric Starting Motors

Two 32 volt starting motors are used to start the engine if electric starting is used. Each starting motor contains a friction-clutch drive mechanism. It functions in a similar manner as other starting drive mechanisms except it uses a series of spring-loaded clutch plates which slip momentarily during engagement. The clutch thus serves to protect the pinion and ring gear from shock.

The starting motors used with a clockwise rotation engine have different drive mechanisms and armature rotation than the starting motors used with a counterclockwise rotation engine. For the difference in the appearance of the drive, see the topic, AIR STARTING SYSTEM.

A heavy duty magnetic switch is used on each starting motor.

For the wiring diagrams, see the Operation and Maintenance Instructions.

WARNING

Extremely high currents flow through the circuit when the starting motors are operating. Therefore, care must be taken to prevent grounding the terminals accidentally because serious damage and injury could result.

REMOVAL AND INSTALLATION

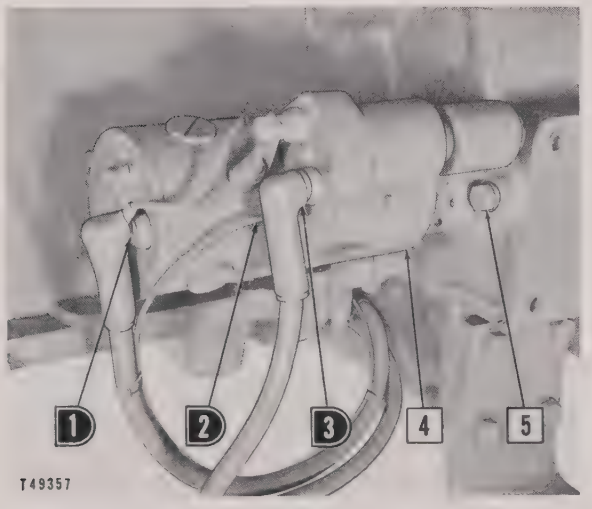

PREPARING TO REMOVE LEFT STARTING MOTOR

☐ Remove ◗ Disconnect

1–Cable and wire. 2–Wire. 3–Cable. 4–Starting motor. 5–Bolt (three).

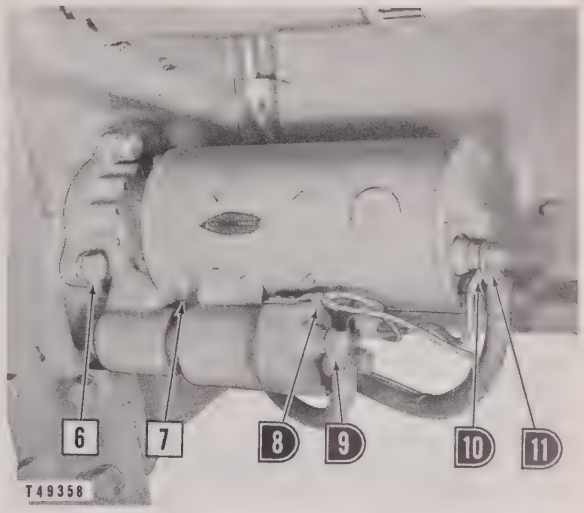

PREPARING TO REMOVE RIGHT STARTING MOTOR

☐ Remove ◗ Disconnect

6–Bolt (three). 7–Starting motor. 8–Wire. 9–Cable. 10–Wire. 11–Cable.

NOTE

Mark the cables, wires and terminals so they can be correctly connected when installing the starting motors.

Marine Gear

REMOVAL AND INSTALLATION

1. Drain the marine gear housing **(3)**.
2. Disconnect the oil inlet and outlet lines **(1)** and **(2)** to the oil cooler.

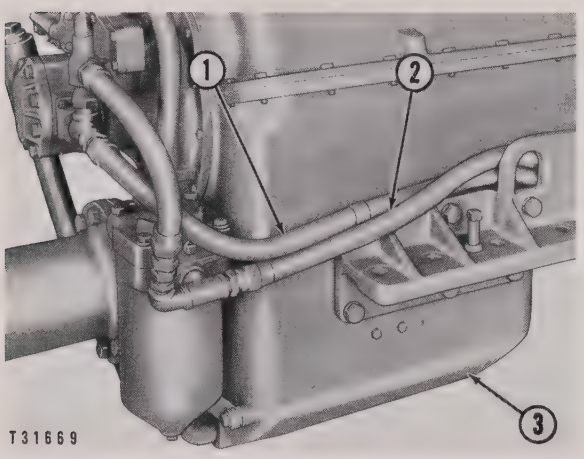

DISCONNECTING OIL LINES
1–Oil line. 2–Oil line. 3–Marine gear housing.

3. Disconnect the sump pump oil line **(6)**.
4. Remove the bolts securing the marine gear housing to the flywheel housing **(4)**.
5. Remove the bolts securing the mounting bracket **(5)** to the marine gear housing.

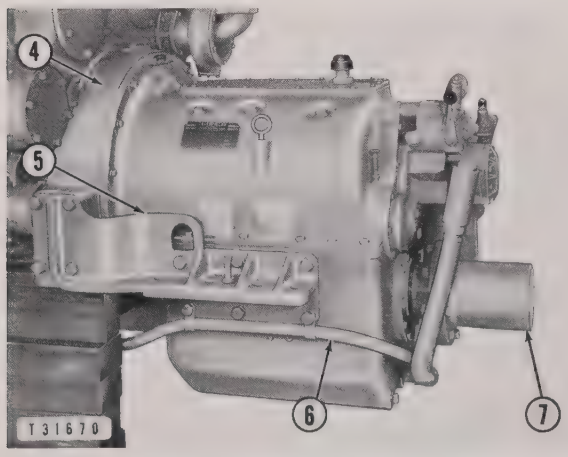

PREPARING TO REMOVE MARINE GEAR
4–Flywheel housing. 5–Mounting bracket. 6–Oil line. 7–Companion flange.

NOTE

In installations where the bolts securing the bracket **(5)** to the marine gear housing are inaccessible, the bolts securing the bracket to the flywheel housing should be removed.

6. Remove the companion flange **(7)** from the coupling flange.

NOTE

The marine gear weighs approximately 2200 pounds.

7. Attach a hoist as illustrated.

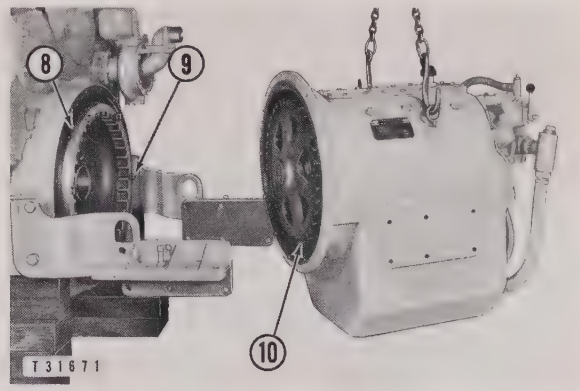

REMOVING MARINE GEAR
8–Drive ring. 9–Bolt. 10–Drive spider.

8. Separate the marine gear from the flywheel housing by moving the marine gear away from the engine until the drive spider **(10)** clears the drive ring **(8)**.

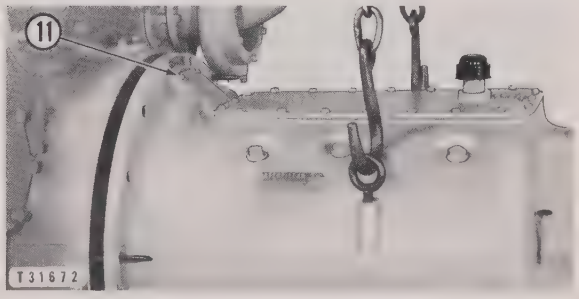

INSTALLING MARINE GEAR
11–Top cover.

9. If the drive ring **(8)** needs replacing, it can be removed from the flywheel by removing the bolts **(9)**.
10. When installing the marine gear to the engine, the use of two ½" - 13 (NC) guide pins will aid in the alignment of the gear housing with the bore of the flywheel housing. With the top cover **(11)** removed, check the alignment of the drive spider and the rubber drive blocks with the drive ring while installing the marine gear.
11. The installation of the marine gear can be completed by connecting and tightening the oil lines and servicing the gear as outlined in the Operation and Maintenance Instructions.

Generator

REMOVAL

1. Disconnect and tape all electrical leads on the generator. The leads are marked with metal identification tags to aid in making the correct connections.

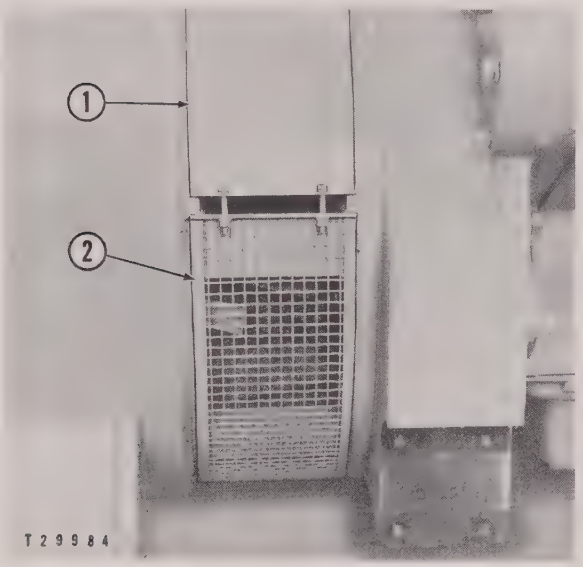

PREPARING TO REMOVE GENERATOR
1–Drip cover. 2–Screen.

2. Remove the mounting bolts that secure the generator to the base.
3. Remove the drip cover **(1)** and the screen **(2)** at the generator-engine coupling.

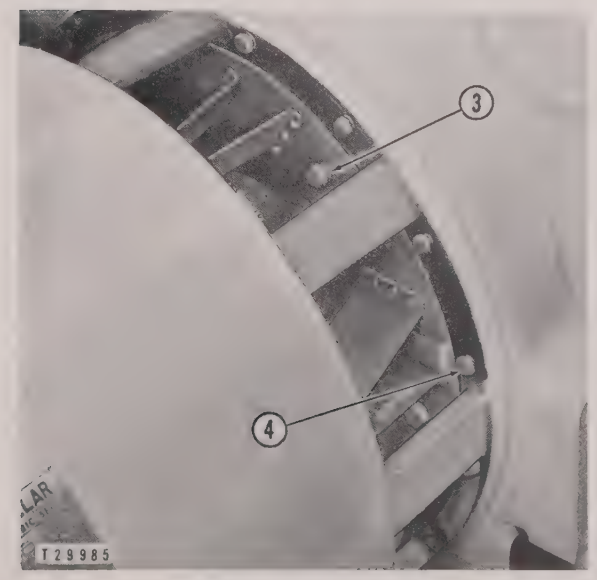

REMOVING GENERATOR
3–Bolt. 4–Bolt.

4. Loosen the mounting bolts in the engine front support.
5. Remove the bolts **(3)** securing the fan and plate assembly to the flywheel.
6. Using a suitable hoist, raise the generator from the base and block up the engine at the rear.
7. Remove the bolts **(4)** securing the generator to the flywheel housing.
8. Move the generator to the rear far enough for the shaft **(5)** to clear the flywheel housing **(6)**.

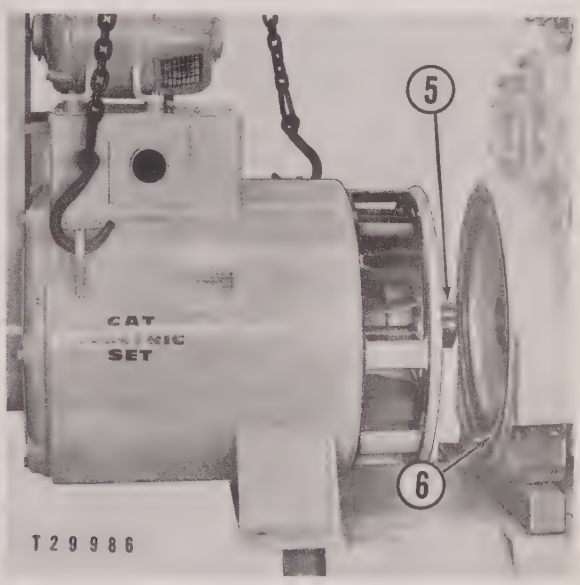

GENERATOR REMOVED
5–Shaft. 6–Flywheel housing.

NOTE

Note the number of shims used between the fan hub and plate assembly, if further disassembly is necessary.

INSTALLATION

Installation is in reverse order of removal unless a new crankshaft, flywheel, flywheel housing, generator shaft, or connecting parts are installed. If any of these parts are installed new, consideration must be given to the number of shims used between the generator shaft and the coupling plate assembly. Shims are used to center the generator rotor in the generator frame so the crankshaft end clearance is not restricted by the generator bearing clearance.

The correct number of shims is determined as follows:

1. With the generator rotor shaft centered in the generator bearing end clearance, measure di-

mension **(A)** from the generator adapter mounting face **(1)** to the coupling plate assembly mounting face **(5)** of the hub.

2. With the engine crankshaft in the extreme forward position, measure dimension **(B)** from the flywheel housing face **(2)** to the coupling plate assembly mounting face **(4)** of the flywheel.

3. Add dimension **(A)** to the thickness of the coupling plate assembly **(3)**. Call the sum of these two dimensions, dimension **(C)**.

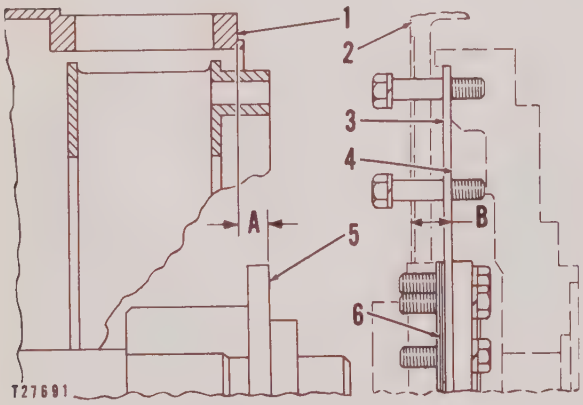

ALIGNING GENERATOR WITH FLYWHEEL

A–Distance to be measured. B–Distance to be measured. 1–Generator adapter mounting face. 2–Flywheel housing face. 3–Coupling plate assembly. 4–Coupling plate assembly mounting face on flywheel. 5–Coupling plate assembly mounting face on hub. 6–Shims.

4. Subtract dimension **(C)** from dimension **(B)**. Call this difference dimension **(D)**.

5. Install the number of shims **(6)** required to provide a thickness equal to dimension **(D)** to the nearest 1/64″.

6. Complete the installation in the reverse order of removal.

Generator

REMOVAL

1. Disconnect and tape all electrical leads on the generator. The leads are marked with metal identification tags to aid in making the correct connections.

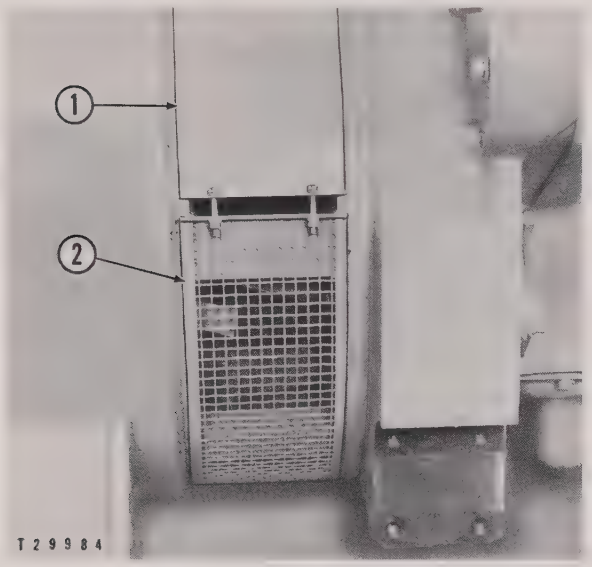

PREPARING TO REMOVE GENERATOR
1–Cover. 2–Screen.

2. Remove the screens from the rear of the generator and slide heavy cardboard or fiber in between the rotating field and the armature. This will prevent the rotating field from dropping and causing severe damage to the rotating field and armature when the generator is removed from the engine.

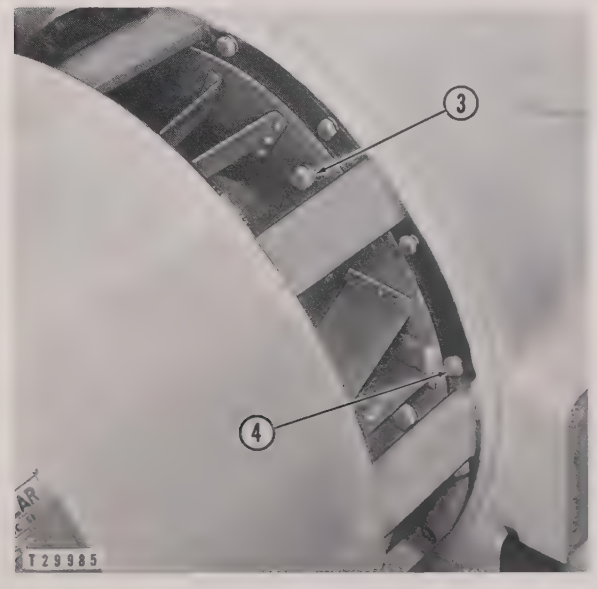

REMOVING GENERATOR
3–Bolt. 4–Bolt.

3. Remove the mounting bolts that secure the generator to the base.
4. Remove the cover **(1)** and the screen **(2)** at the generator-engine coupling.
5. Loosen the mounting bolts in the engine front support.
6. Remove the bolts **(3)** securing the fan and plate assembly to the flywheel.

CAUTION

Do not pry against the generator fan blades, when rotating the engine crankshaft and generator.

7. Make a lifting bracket similar to the one illustrated and attach it to the rear of the generator.

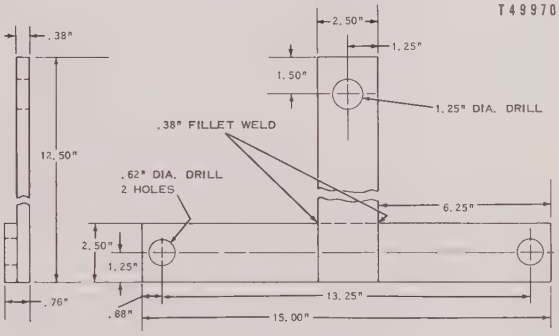

LIFTING BRACKET

8. Using a suitable hoist, raise the generator from the base and block up the engine at the rear.

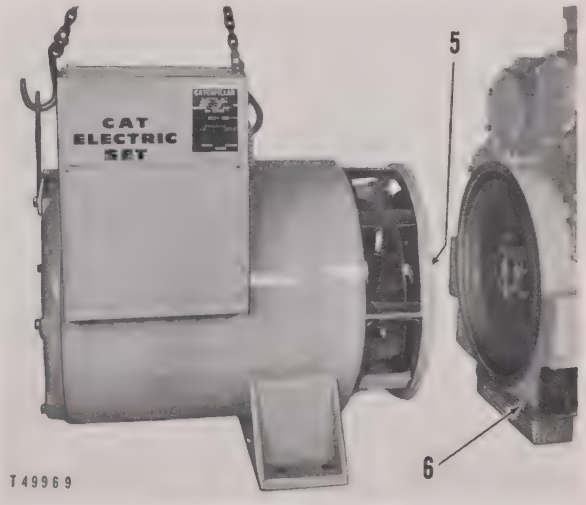

GENERATOR REMOVED
5–Shaft. 6–Flywheel housing.

9. Remove the bolts **(4)** securing the generator to the flywheel housing.

10. Move the generator to the rear far enough for the shaft **(5)** to clear the flywheel housing **(6)**.

NOTE

Note the number of shims used between the fan hub and plate assembly, if further disassembly is necessary.

INSTALLATION

Installation is in reverse order of removal unless a new crankshaft, flywheel, flywheel housing, generator shaft, or connecting parts are installed. If any of these parts are installed new, consideration must be given to the number of shims used between the generator shaft and the coupling plate assembly. Shims are used to center the generator rotor in the generator frame so that crankshaft end clearance is not restricted by the generator bearing clearance.

The correct number of shims is determined as follows:

1. With the generator rotor shaft centered in the generator bearing end clearance, measure dimension **(A)** from the generator adapter mounting face **(1)** to the coupling plate assembly mounting face **(5)** of the hub.

2. With the engine crankshaft in the extreme forward position, measure dimension **(B)** from the flywheel housing face **(2)** to the coupling plate assembly mounting face **(4)** of the flywheel.

3. Add dimension **(A)** to the thickness of the coupling plate assembly **(3)**. Call the sum of these two dimensions, dimension **(C)**.

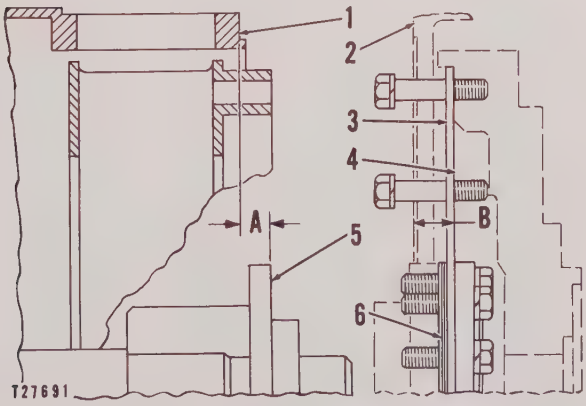

ALIGNING GENERATOR WITH FLYWHEEL

A–Distance to be measured. B–Distance to be measured. 1–Generator adapter mounting face. 2–Flywheel housing face. 3–Coupling plate assembly. 4–Coupling plate assembly mounting face on flywheel. 5–Coupling plate assembly mounting face on hub. 6–Shims.

4. Subtract dimension **(C)** from dimension **(B)**. Call this difference dimension **(D)**.

5. Install the number of shims **(6)** required to provide a thickness equal to dimension **(D)** to the nearest 1/64".

6. Complete the installation in the reverse order of removal.

Torque Converter

The torque converter is bolted directly to the engine flywheel housing. If the torque converter is not equipped with a cut-off clutch, a ring is bolted to the flywheel and the teeth on the spider of the torque converter mesh with teeth on the inside of the ring. Torque converters equipped with a cut-off clutch have the clutch plate assembly bolted to the flywheel.

REMOVAL

1. Open the torque converter bleeder valve **(6)**.
2. Drain the fluid from the torque converter by removing the drain plug **(3)**.
3. Drain the lubricant from the end plate housing by removing the drain plug on the bottom of the end plate.
4. Drain the lubricant from the output shaft housing by removing the drain plug located on the bottom of the output shaft housing.
5. Disconnect the fluid cooler lines **(8)**.
6. Disconnect the output shaft governor drive cable **(1)**, when so equipped, and the fluid line **(2)** at the filter.

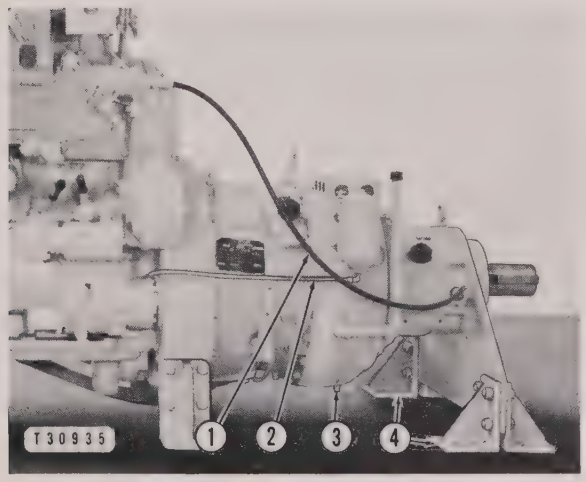

PREPARING TO REMOVE TORQUE CONVERTER
1–Governor drive cable. 2–Fluid line. 3–Drain plug. 4–Brackets.

7. Remove the inspection cover from the top of the torque converter clutch housing and remove the bolts **(5)** which hold the clutch in place on the flywheel.

NOTE

Torque converters without cut-off clutches may be removed without removing the bolts attaching the ring to the flywheel.

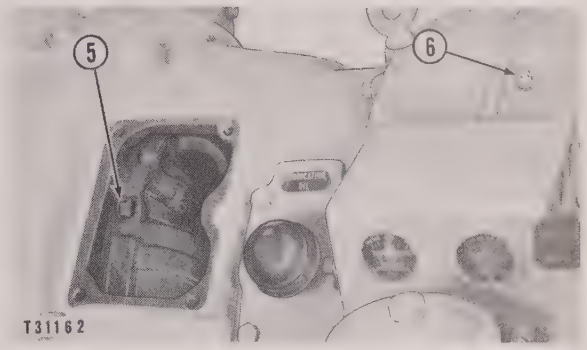

DISCONNECTING CLUTCH
5–Bolt. 6–Valve.

8. Attach a suitable hoist to the torque converter and raise the hoist until a slight lift is applied to the torque converter.

NOTE

The torque converter weighs approximately 1600 pounds without clutch, 1900 pounds with clutch.

9. Remove the brackets **(4)** which support the rear of the torque converter.
10. Remove the bolts which secure the torque converter to the flywheel housing.
11. Insert puller bolts into the holes provided in the torque converter and separate the torque converter from the flywheel housing.
12. Slide the torque converter back and away from engine.

CAUTION

Carefully remove the torque converter from the engine to prevent the clutch assembly **(7)** from sliding off the input shaft, if applicable.

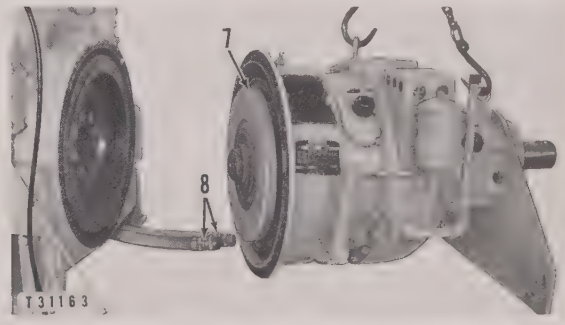

REMOVING THE TORQUE CONVERTER
7–Clutch assembly. 8–Cooler lines.

INSTALLATION

For ease in installation, the clutch, if applicable, and torque converter should be installed as a unit.

When installing with a cut-off clutch:

1. Install two ½″ guide pins 180° apart in the flywheel housing and two ½″ guide pins 180° apart in the flywheel.
2. Attach a hoist and guide the torque converter and clutch assembly into position so the clutch pressure plate will fit into the flywheel.
3. Secure the torque converter to the flywheel housing and remove the guide pins.

NOTE

Secure the clutch to the flywheel by starting one bolt, then rotating the flywheel and clutch and starting another bolt. This can be accomplished by reaching through the opening on the torque converter. After all the bolts are started, tighten them evenly.

When installing a torque converter without a cut-off clutch:

1. Install two ½″ guide pins 180° apart in the flywheel clutch housing.
2. Guide the torque converter into position and align the teeth of the spider on the torque converter with the teeth in the ring attached to the flywheel.
3. Secure the torque converter to the flywheel housing and remove the guide pins.

Complete the installation by attaching the cooler lines, the line to the filter, and the governor drive cable.

Fill both the end plate and output shaft housing with lubricant, and fill and bleed the torque converter following the procedures described in the Operation and Maintenance Instructions.

Water Temperature Shut-off Control Valve

OPERATION

The water temperature shut-off in itself is a control valve for the oil pressure shut-off, as it is actually the oil pressure shut-off that functions to stop the engine. The water temperature shut-off is used only with the oil pressure shut-off.

When the water temperature is normal, spring **(3)** holds valve **(5)** on its seat which prevents oil flowing from the oil pressure shut-off through opening **(2)** of the water temperature shut-off and on into the engine crankcase through outlet opening **(6)**. This allows oil pressure to build up in the safety shut-off system with the result that the oil pressure shut-off functions as described in the topic, SAFETY SHUT-OFF CONTROLS.

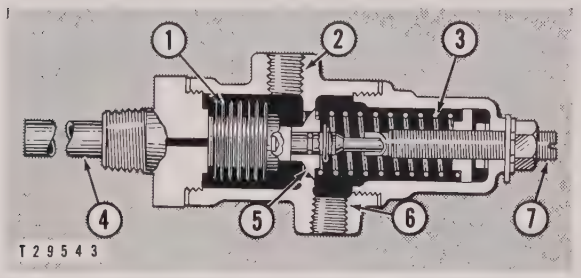

WATER TEMPERATURE SHUT-OFF CONTROL
1–Bellows. 2–Inlet opening. 3–Spring. 4–Temperature bulb. 5–Valve. 6–Outlet opening. 7–Adjusting screw.

Occurrence of abnormally high engine water temperature heats temperature bulb **(4)** which is immersed in the engine water at the rear of the manifold. As heat on the temperature bulb increases, bellows assembly **(1)** expands, unseating valve **(5)** allowing oil held under pressure in the safety shut-off control system to return to the engine crankcase through outlet opening **(6)**. A drop in the oil pressure in the line from the oil pressure shut-off to the water temperature shut-off causes the oil pressure shut-off to shut down the engine.

The temperature at which the water temperature shut-off operates is changed by adjusting screw **(7)**.

OIL FLOW

Engine oil under pressure from the left side of the timing gear housing **(7)** enters line **(6)** and flows to a control piston in the oil pressure and overspeed shut-off controls **(4)**. When a water temperature shut-off control valve is used, a line **(3)** connects to the oil pressure and overspeed shut-off controls, and supplies pressure oil to the valve **(2)**. When engine water temperature is not abnormally hot, the valve **(2)** remains closed and no oil can flow through the valve and into the dump line **(1)**.

Should the coolant temperature become excessive, the thermostatically controlled valve opens, as described in the previous topic, and permits oil to flow through the dump line and into the engine crankcase. Thus, a low oil pressure condition is actually simulated and the oil pressure shut-off control then stops the engine as further described in the topic, SAFETY SHUT-OFF CONTROLS.

After a shut-down caused by excessively high water temperature, depress reset button **(5)** and reset the rack or air inlet shut-off as described in the topic, SAFETY SHUT-OFF CONTROLS.

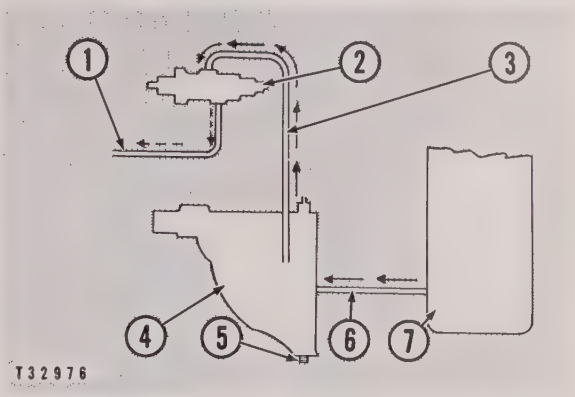

SCHEMATIC FLOW DIAGRAM OF OIL (SIDE VIEW)
1–Oil dump line to engine block. 2–Shut-off valve. 3–Oil supply line. 4–Oil pressure and overspeed shut-off controls. 5–Reset button. 6–Oil supply line. 7–Timing gear housing.

ADJUSTMENT

The water temperature adjustment should be made when the engine is operating without load. The shut-off has an adjustable range from 188° F. to 208° F. (87° C. to 98° C.) when there is no load on the engine. However, an engine operating under load may cause a variation of approximately 5° F. (3° C.) from the point at which the water temperature shut-off will open. This should be considered when adjusting the water temperature shut-off.

To raise the temperature at which the shut-off valve operates, remove the cotter pin **(1)**, loosen the locknut **(2)**, and turn the adjusting screw **(3)** counterclockwise. To lower the temperature, turn the adjusting screw clockwise. Always tighten the locknut and replace the cotter pin after making an adjustment.

The most practical method of making the adjustment is as follows: Turn the adjusting screw counterclockwise about three turns; then reduce the flow of water through the cooling system or cover the radiator and operate the diesel engine at no load until

the water temperature reaches that selected for shut-down. Then, slowly turn the adjusting screw clockwise until the engine stops after which the locknut should be tightened. Check the correctness of adjustment by operating the diesel engine with full flow of water through the cooling system or without the radiator covered. Again reduce the flow of water through the cooling system or cover the radiator to determine if shut-down occurs at the desired temperature. If not, repeat this procedure until proper results are obtained.

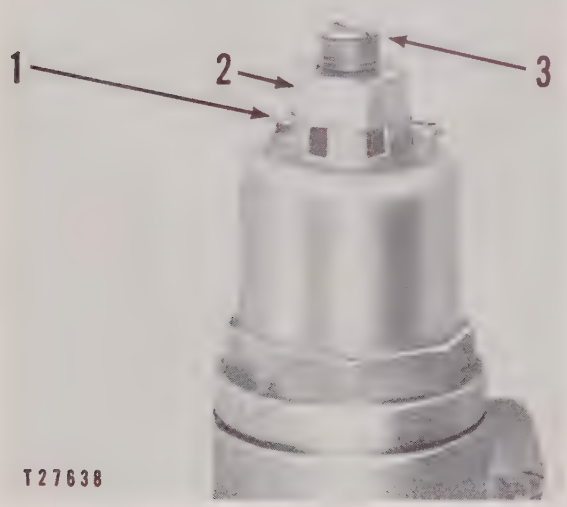

WATER TEMPERATURE SHUT-OFF ADJUSTMENT
1–Cotter pin. 2–Locknut. 3–Adjusting screw.

REMOVAL AND INSTALLATION

Disconnect the supply line **(1)** and the dump line **(3)** from the valve **(2)**.

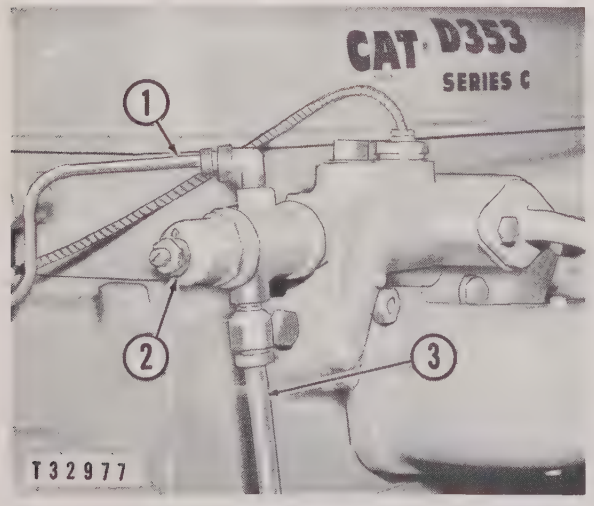

VALVE REMOVAL
1–Supply line. 2–Valve. 3–Dump line.

Drain the radiator until the coolant level is below the water manifold and remove the valve **(2)**.

Install in the reverse order of removal, making sure the inlet side of the valve mates with the supply line.

DISASSEMBLY AND ASSEMBLY

1. Remove the nut **(1)** and the cotter pin **(2)**.
2. Remove the cap **(3)** from the body **(6)**, and remove the gasket **(8)**, spring **(4)** and adjusting screw **(7)**.

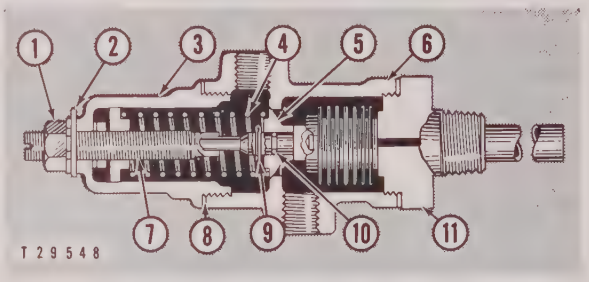

WATER TEMPERATURE SHUT-OFF DISASSEMBLY
1–Nut. 2–Cotter pin. 3–Cap. 4–Spring. 5–Valve. 6–Body. 7–Adjusting screw. 8–Gasket. 9–Cotter pin. 10–O-ring seal. 11–Bellows assembly.

3. Remove the cotter pin **(9)**, the valve **(5)**, and the O-ring seal **(10)**.
4. Remove the bellows assembly **(11)** from the body **(6)**.
5. Inspect all gaskets and seals, and replace if worn or damaged.

Water Temperature Shut-off Control Valve

OPERATION

The water temperature shut-off in itself is a control valve for the oil pressure shut-off, as it is actually the oil pressure shut-off that functions to stop the engine. The water temperature shut-off is used only with the oil pressure shut-off.

When the water temperature is normal, spring **(1)** holds ball **(5)** on its seat which prevents oil flowing from the oil pressure shut-off through opening **(2)** of the water temperature shut-off and on into the engine crankcase through outlet opening **(6)**. This allows oil pressure to build up in the safety shut-off system with the result that the oil pressure shut-off functions as described in the topic, SAFETY SHUT-OFF CONTROLS.

Occurrence of abnormally high engine water temperature heats the thermostatic assembly **(4)** which is immersed in the engine water at the rear of the water manifold. As heat on the thermostatic assembly increases, it expands against the stem **(3)** unseating the ball **(5)** allowing oil held under pressure in the safety shut-off control system to return to the engine crankcase through outlet opening **(6)**. A drop in the oil pressure in the line from the oil pressure shut-off to the water temperature shut-off causes the oil pressure shut-off to shut down the engine.

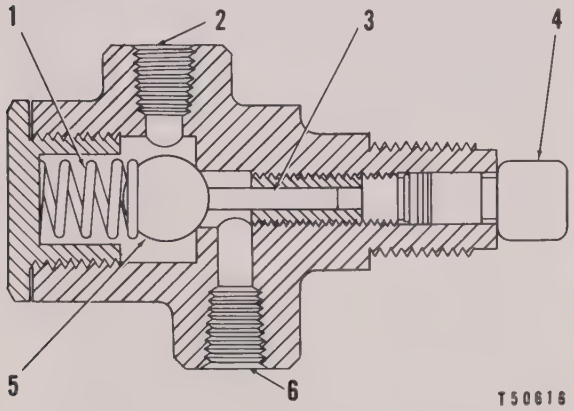

WATER TEMPERATURE SHUT-OFF CONTROL
1–Spring. 2–Inlet opening. 3–Stem. 4–Thermostatic assembly. 5–Ball. 6–Outlet opening.

OIL FLOW

Engine oil under pressure from the left side of the timing gear housing **(7)** enters line **(6)** and flows to a control piston in the oil pressure and overspeed shut-off controls **(4)**. When a water temperature shut-off control valve is used, a line **(3)** connects to the oil pressure and overspeed shut-off controls, and supplies pressure oil to the valve **(2)**. When engine water temperature is not abnormally hot, the valve **(2)** remains closed and no oil can flow through the valve and into the dump line **(1)**.

Should the coolant temperature become excessive, the thermostatically controlled valve opens, as described in the previous topic, and permits oil to flow through the dump line and into the engine crankcase. Thus, a low oil pressure condition is actually simulated and the oil pressure shut-off control then stops the engine as further described in the topic, SAFETY SHUT-OFF CONTROLS.

After a shut-down caused by excessively high water temperature, reset the rack or air inlet shut-off as described in the topic, SAFETY SHUT-OFF CONTROLS.

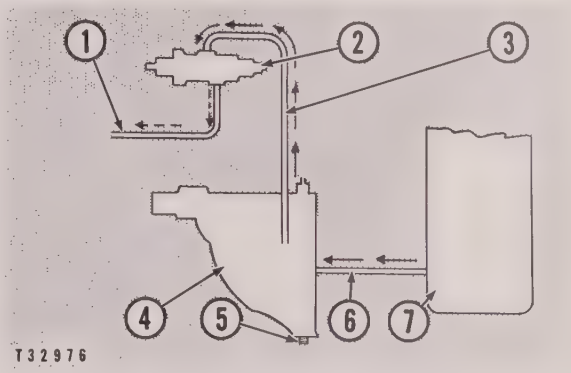

SCHEMATIC FLOW DIAGRAM OF OIL (SIDE VIEW)
1–Oil dump line to engine block. 2–Shut-off valve. 3–Oil supply line. 4–Oil pressure and overspeed shut-off controls. 5–Reset button. 6–Oil supply line. 7–Timing gear housing.

REMOVAL AND INSTALLATION

Drain the radiator until the coolant level is below the water manifold and remove the valve **(2)**.

Install in the reverse order of removal, making sure the inlet side of the valve mates with the supply line.

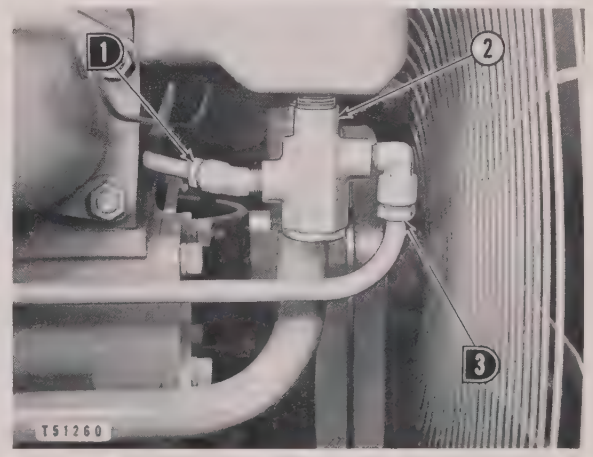

VALVE REMOVAL
D Disconnect
1–Supply line. 2–Valve. 3–Dump line.

Safety Shut-off Controls

INTRODUCTION

The safety shut-off control **(1)** is mounted on the accessory drive housing and is driven by the accessory drive shaft.

Engine lubricating oil pressure is used to actuate the shut-off control. The plug **(3)** provides the pressure, or supply, oil connection for the line leading to the water temperature shut-off control valve. Line **(5)** supplies pressure oil to the shut-off control.

An overspeed governor is incorporated in the shut-off control.

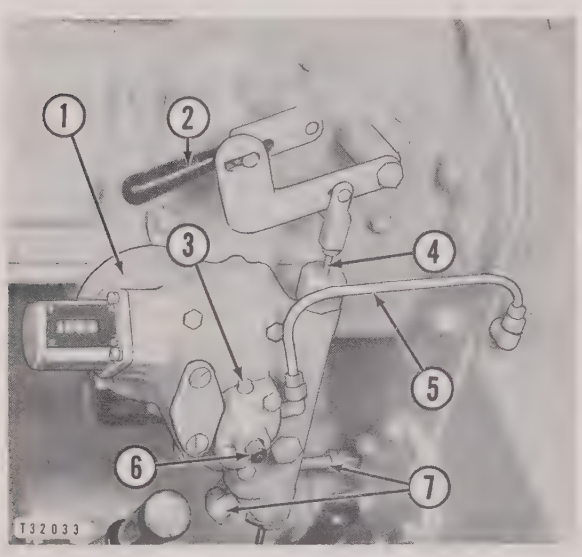

SAFETY SHUT-OFF CONTROL (RACK SHUT-OFF ARRANGEMENT)
1–Shut-off control. 2–Fuel rack shut-off. 3–Plug (pressure oil connection to water temperature shut-off). 4–Release rod. 5–Pressure oil line to shut-off control. 6–Reset button. 7–Lubricating oil drain line.

The shut-off control release rod **(4)** will actuate either an air flapper valve or a fuel rack shut-off **(2)**.

The reset button **(6)** is used to reset the control after the engine has been stopped by the control.

NOTE

It is not necessary to reset the control after a normal shut-down.

The shut-off mechanisms receive lubricating oil from the accessory drive housing through a small hole in the service meter drive shaft. Oil enters the hole in the form of a mist. It flows through the shaft and out the shaft bearings to drain down over the control mechanism. Lubricating oil leaves the housing through external drain line **(7)**.

It is important that the drain line be kept open. If the control housing fills with lubricating oil, the overspeed mechanism will not operate properly. An excess of oil in the housing tends to raise the overspeed limit.

OPERATION

Low Oil Pressure Shut-off and Water Temperature Shut-off

The oil pressure control will stop the engine should the lubricating oil pressure drop below the safe operating range, or, if an overheating condition occurs. Excessively hot water opens a shut-off control valve which simulates low oil pressure.

Under normal engine operating conditions, engine lubricating oil is directed from the timing gear housing through supply line **(5)**, see previous illustration, to the inlet passage **(6)**. This oil is then directed against the control piston **(1)**.

One end of the worm follower **(3)** is piloted into the guide **(8)**. The follower is free to pivot about a fixed shaft **(2)** in the housing and is actuated by the horizontal movement of the guide **(8)**.

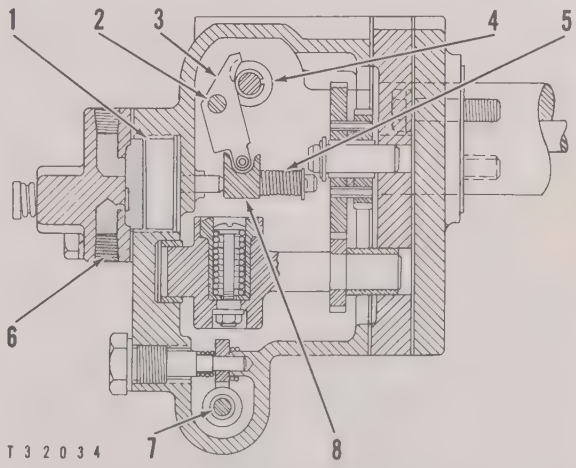

SHUT-OFF CONTROL (CROSS-SECTIONAL TOP VIEW — NORMAL OPERATION)
1–Piston. 2–Follower shaft. 3–Follower. 4–Worm shaft. 5–Spring. 6–Inlet oil passage. 7–Release rod. 8–Guide.

The worm shaft **(4)** is driven by the service meter drive shaft and rotates any time the engine is operating.

When the engine oil pressure is within the safe operating range, the piston **(1)** is held against the guide **(8)** compressing the springs **(5)** and pivoting the follower **(3)** out of mesh with the worm shaft **(4)**.

Should the lubricating oil pressure drop below normal operating range, the oil pressure actuating

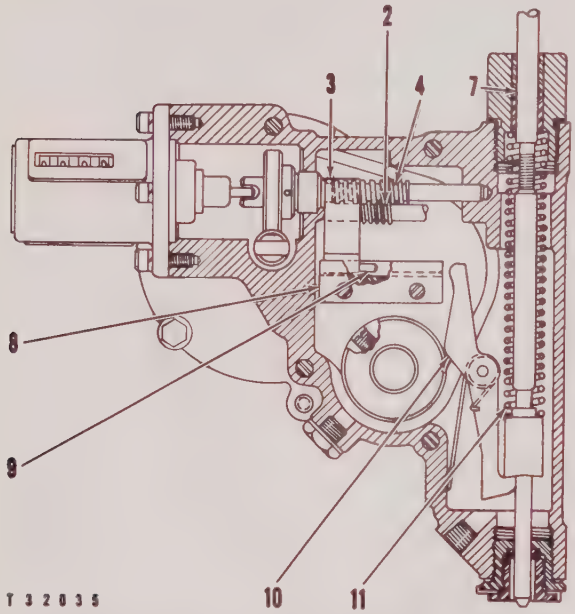

SHUT-OFF CONTROL
(CROSS-SECTIONAL SIDE VIEW — NORMAL OPERATION)
2–Follower shaft. 3–Follower. 4–Worm shaft. 7–Release rod. 8–Guide. 9–Pin. 10–Release lever. 11–Spring.

the piston **(1)** will also drop and the springs **(5)** will force the guide **(8)** back and the piston **(1)** to the rear of its chamber, and cause the follower **(3)** to pivot on shaft **(2)** and mesh with the worm shaft **(4)**.

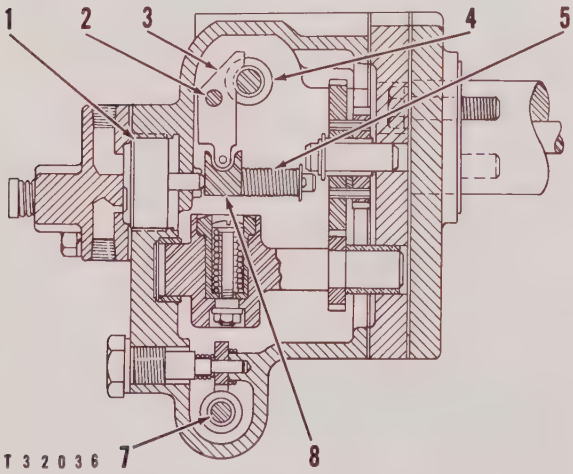

SHUT-OFF CONTROL
(CROSS-SECTIONAL TOP VIEW DURING SHUT-OFF OPERATION)
1–Piston. 2–Follower shaft. 3–Follower. 4–Worm shaft. 5–Spring. 7–Release rod. 8–Guide.

With the follower **(3)** engaged with the worm shaft **(4)**, the follower will travel the length of the worm shaft **(4)** which is turning at one-half engine speed. As the follower reaches the end of its travel, the pin **(9)** on the follower makes contact with the release lever **(10)**. The release lever is then tripped and releases the rod **(7)** which is forced downward by the spring **(11)**.

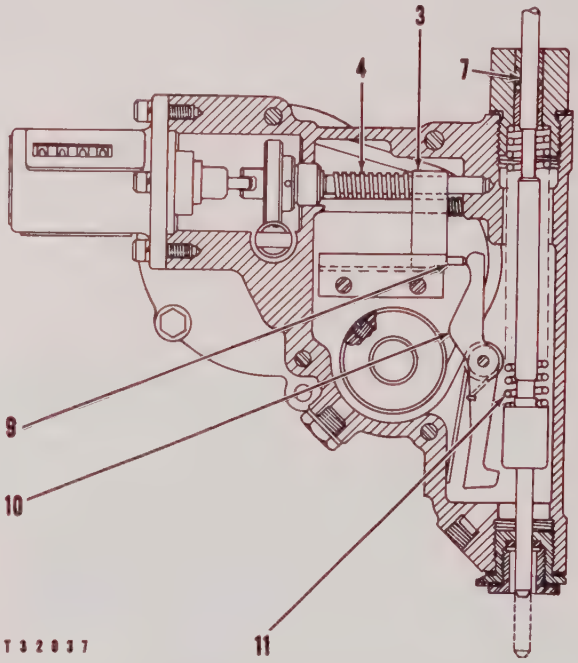

SHUT-OFF CONTROL
(CROSS-SECTIONAL SIDE VIEW DURING SHUT-OFF OPERATION)
3–Follower. 4–Worm. 7–Release rod. 9–Pin. 10–Release lever. 11–Spring.

The release rod **(7)** moving downward will pull the lever **(15)** down. Lever **(15)** pulls the lever **(14)** down allowing the arm **(13)**, which is fastened to the lever **(14)**, to move forward contacting the shaft **(12)**. Arm **(13)** moves the shaft **(12)** forward, contacting the fuel injection pump rack and moving the rack to the off position and stopping the engine.

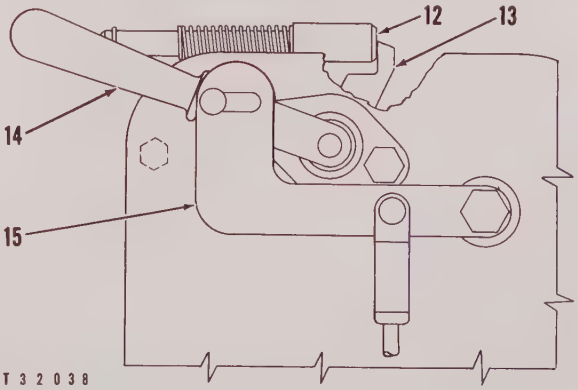

RACK SHUT-OFF
12–Shaft. 13–Arm. 14–Lever. 15–Lever.

On engines equipped with an air flapper valve, a cable is attached to the upper end of the release rod

(7), and is used to actuate the air flapper valve located on the air inlet manifold.

Overspeed Shut-off

Should an overspeeding condition occur, the overspeed shut-off control located in the shut-off control housing will actuate the release rod and then either the fuel rack shut-off or the air flapper valve.

The overspeed carrier assembly (1) is driven by the service meter shaft and rotates whenever the engine is operating. Within the carrier flange is a rotating weight (2) held toward the center of the carrier shaft by an adjusting screw, spring and nut.

As the engine RPM increases, the centrifugal force acting on the weight increases and the weight moves out of the carrier flange. This movement of the weight continues until the spring force (tending to hold the weight in) is equal to the centrifugal force (tending to throw the weight out).

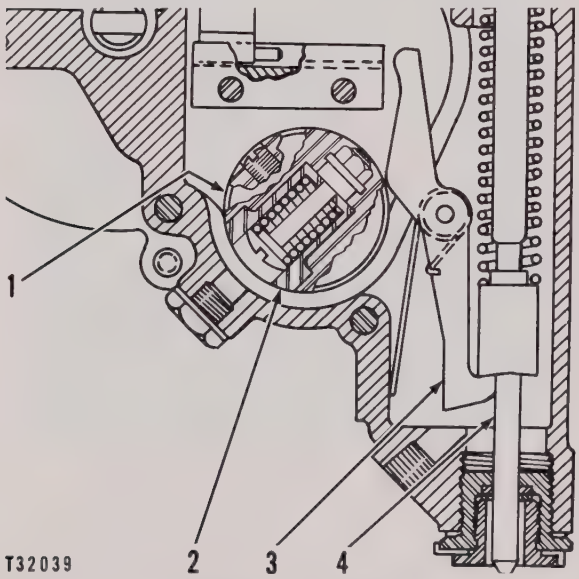

OVERSPEED CONTROL
1–Carrier assembly. 2–Rotating weight. 3–Release lever. 4–Release rod.

When the engine overspeeds, the weight will continue to move out of the carrier flange until it makes contact with the release lever (3) and releases the release rod (4) which is attached to the fuel rack shut-off or an air inlet flapper valve. In either case the engine will be stopped.

RESETTING THE CONTROL

Whenever the engine has been shut down by the safety shut-off control, the reason for the shut-down must be corrected and the control reset before the engine can be restarted.

Overspeed Shut-down

The spring-loaded release rod (2) is relatched by pulling up on the fuel rack shut-off lever (1), or by moving the air flapper valve lever toward the rear of the engine.

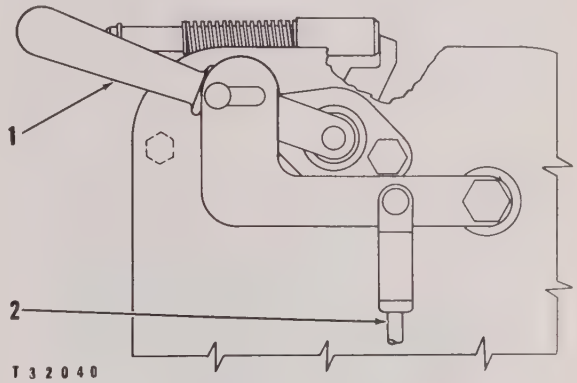

SHUT-OFF CONTROL RESET
1–Lever. 2–Release rod.

The engine can now be started.

Low Oil Pressure, Water Temperature Shut-down

Push the reset button (1) on the side of the shut-off control housing. This manually moves the control piston (2) and pin against the follower guide (4). The movement of the guide pivots the worm follower (3) away from the end of the worm shaft and allows the spring to return the follower to the start of the worm shaft threads.

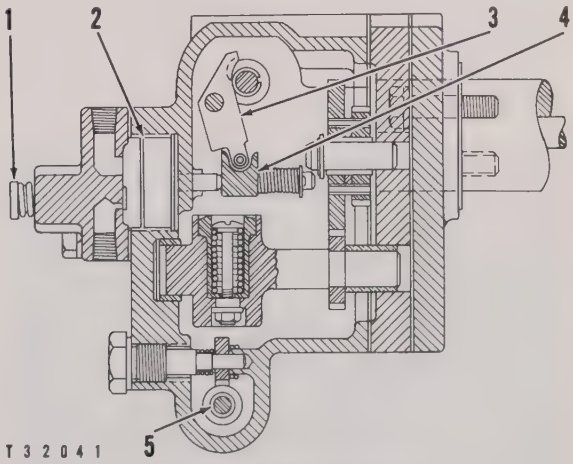

SHUT-OFF CONTROL RESET
1–Reset button. 2–Piston. 3–Worm follower. 4–Follower guide. 5–Release rod.

Latch the spring-loaded release rod (5) by pulling up on the fuel rack shut-off lever, or by moving the air flapper valve lever toward the rear of the engine.

Start the engine.

NOTE

In cold weather operation it may be necessary to push the reset button momentarily while cranking the diesel engine to prevent actuating the shut-off control. This is necessary as the oil pressure may not reach the operating range rapidly enough due to the longer cranking period usually encountered under these conditions.

Under normal operation conditions, lubricating oil pressure will reach the operating range before the follower has reached the limit of travel and actuates the release lever and rod.

OVERSPEED CONTROL ADJUSTMENT

The overspeed control mechanism is adjusted at the factory and should not be changed unless the carrier assembly has been disassembled or the adjustment disturbed in some way. The overspeed control is originally set to shut down the engine if the engine RPM rises more than 18% above full load RPM.

The adjustment is made by removing the plug from the front of the shut-off housing to gain access to the weight adjusting screw. It may be necessary to rotate the flywheel until the adjusting screw can be reached with a screwdriver as illustrated.

CAUTION

Always turn the crankshaft in the direction of normal rotation (counterclockwise when viewed from the flywheel). If the crankshaft is turned in a clockwise direction it is possible to damage the worm shaft and follower.

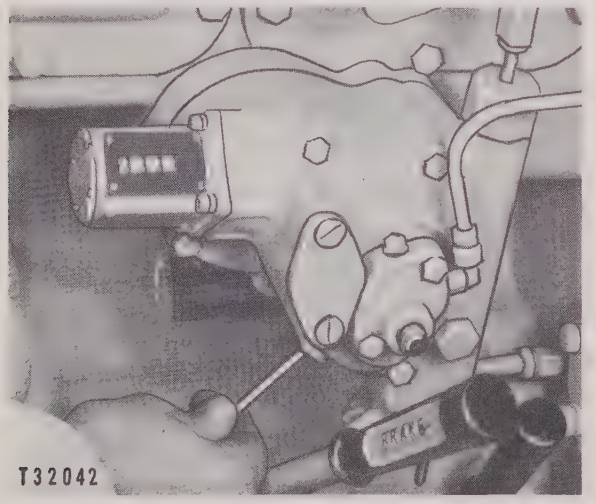

ADJUSTING THE WEIGHT SPRING TENSION

One complete turn of the adjusting screw will vary the maximum overspeed limit from 45 to 50 RPM. Clockwise rotation of the adjusting screw will compress the spring and raise the maximum speed limit, while counterclockwise rotation of the screw will allow the spring to expand and lower the maximum speed limit.

SAFETY SHUT-OFF CONTROL

The following illustrations show the safety shut-off control installed with the fuel rack shut-off arrangement. The safety shut-off control used with the air flapper valve is similar and the procedures described apply to both installations.

Removal and Installation

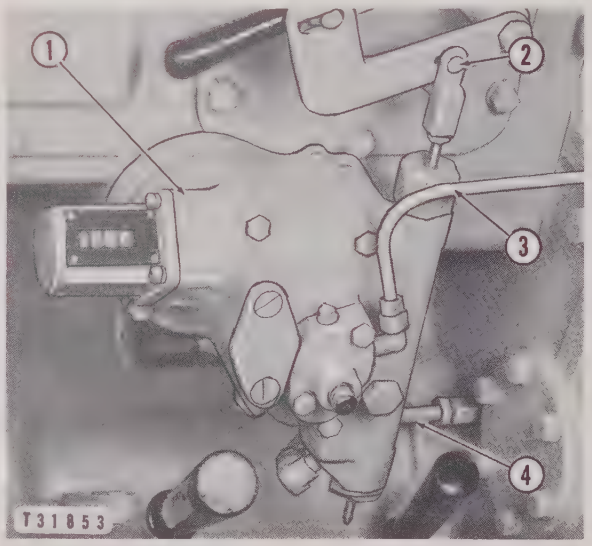

SAFETY SHUT-OFF CONTROL REMOVAL
1–Safety shut-off control. 2–Pin. 3–Oil line. 4–Oil line.

1. Remove the oil line **(3)** and disconnect the oil drain line **(4)** at the control **(1)**.

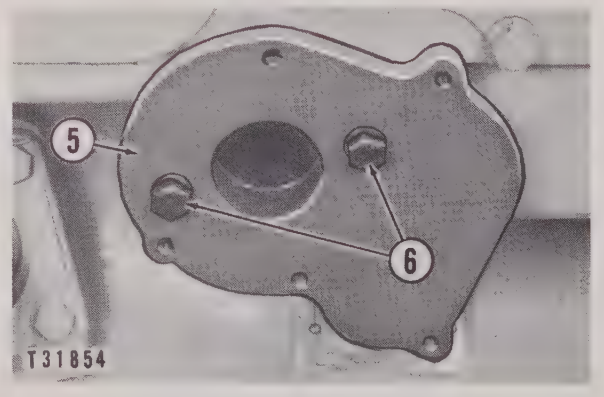

ADAPTER PLATE REMOVAL
5–Adapter spacer. 6–Bolts.

2. Remove the pin **(2)**.
3. Remove the bolts securing the control to the engine and remove the control.
4. Remove the bolts **(6)** and the adapter spacer **(5)**.
5. Install in the reverse order of removal, using new gaskets as needed.

Reset Button and Piston Removal

Remove the bolts which hold the cover **(1)** to the control housing **(2)** and remove the cover and button as an assembly.

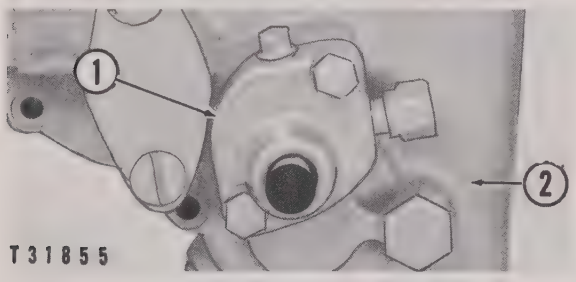

RESET BUTTON REMOVAL
1–Cover. 2–Control housing.

Remove the piston **(3)**.

Install in the reverse order of removal.

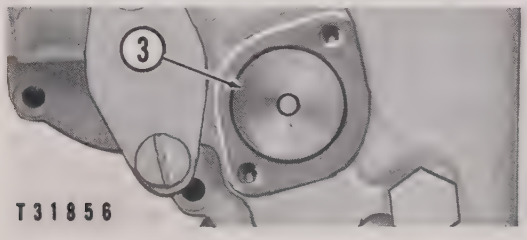

PISTON REMOVAL
3–Piston.

Reset Button Disassembly and Assembly

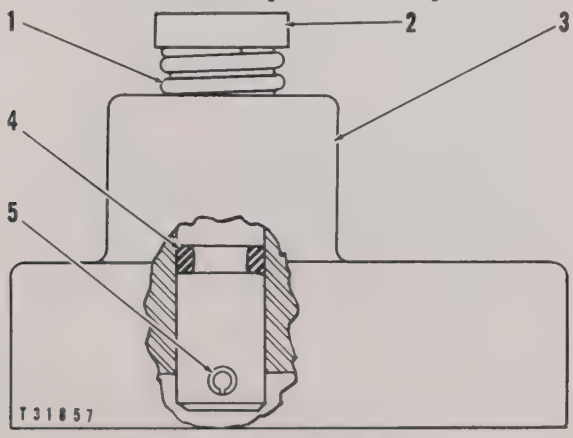

RESET BUTTON DISASSEMBLY
1–Spring. 2–Plunger. 3–Cover. 4–O-ring seal. 5–Roll pin.

Remove the roll pin **(5)**.

Remove the plunger **(2)**, spring **(1)** and O-ring seal **(4)** from the cover **(3)**.

Assemble in reverse order of disassembly.

Service Meter Removal

The service meter can be removed by removing the hollow head screws securing it to the shut-off control housing.

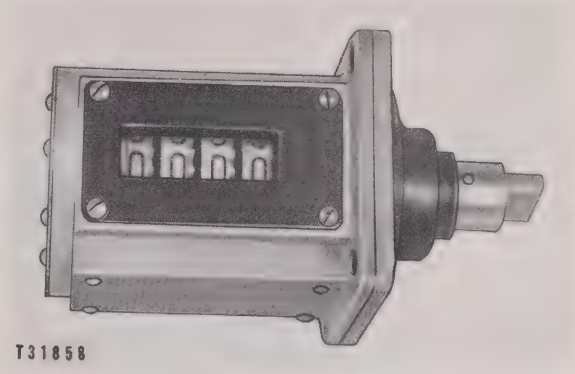

SERVICE METER

Individual parts of the meter are not serviced.

When installing the service meter, align the tang on the service meter shaft with the mating slot in the drive shaft.

Drive and Adapter Removal and Installation

The drive and adapter assembly **(3)** can be removed from the control housing **(1)** by removal of the bolts **(2)**.

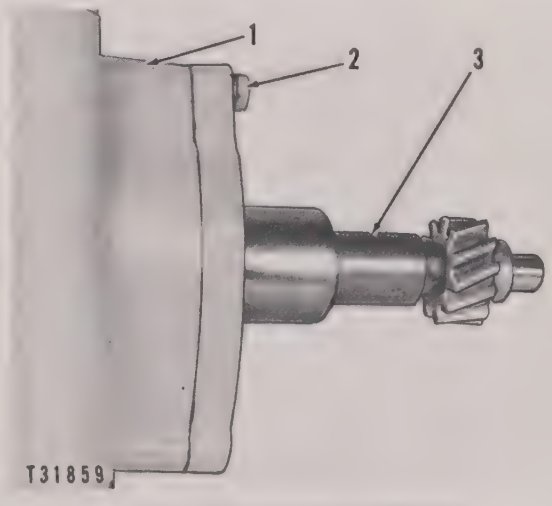

DRIVE AND ADAPTER REMOVAL
1–Housing. 2–Bolt. 3–Drive and adapter assembly.

Install in the reverse order of removal, using a new gasket.

Disassembly and Assembly of Drive Assembly

1. Remove the snap ring **(4)**, washer **(3)**, gear **(2)** and another gear not shown from the shaft **(5)**, which is pressed into the adapter **(1)**.
2. After removing the gear **(2)**, drive out the roll pins **(6)** and separate the two gears.
3. Remove the roll pin **(8)** and remove the gear **(7)** from the drive shaft **(9)**.
4. Remove the drive shaft **(9)** from the adapter **(1)**.

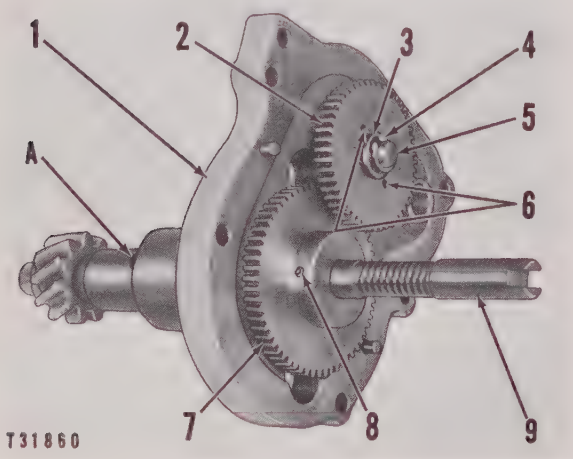

ADAPTER AND DRIVE DISASSEMBLY
A–Oil hole. 1–Adapter. 2–Gear. 3–Washer. 4–Snap ring. 5–Shaft. 6–Roll pins. 7–Gear. 8–Roll pin. 9–Drive shaft.

5. Inspect all parts for damage or wear and replace as needed.

NOTE

Oil for lubrication enters hole **(A)**.

6. Assemble in the reverse order of disassembly.

Carrier and Weight Disassembly and Assembly

With the adapter and drive shaft removed, the carrier and weight assembly **(1)** can be removed from the housing **(2)** and disassembled in the following manner:

1. Using a suitable puller, remove the gear **(5)** and replace if worn or damaged.
2. Clean up the staked area around the screw **(6)** and remove the screw from the carrier **(4)**.

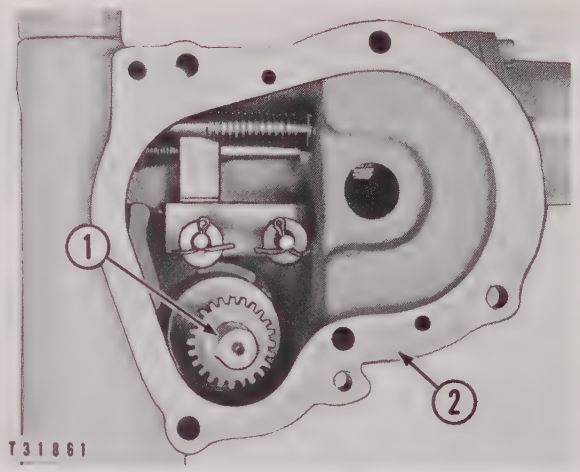

CARRIER AND WEIGHT REMOVAL
1–Carrier and weight assembly. 2–Housing.

NOTE

The screw **(6)** is both a guide for the weight and a safety device to keep the weight from flying out should the bolt **(3)** break for any reason.

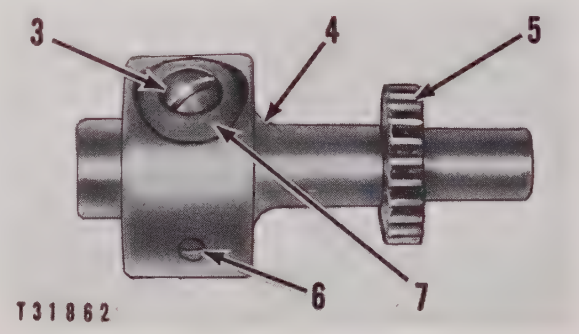

CARRIER DISASSEMBLY
3–Screw. 4–Carrier. 5–Gear. 6–Screw. 7–Weight.

3. Unthread the screw **(3)** from the nut **(10)**.

NOTE

When removing the screw **(3)**, count the number of turns required to remove. When installing the screw, install with the same number of turns. After the safety shut-off has been installed on the engine, see the topic, OVERSPEED CONTROL ADJUSTMENT.

4. Remove the screw **(3)**, nut **(10)**, spring **(8)**, washer **(9)** and weight **(7)** from the carrier **(4)**.
5. Assemble in reverse order of disassembly, restaking the area around the screw **(6)**.

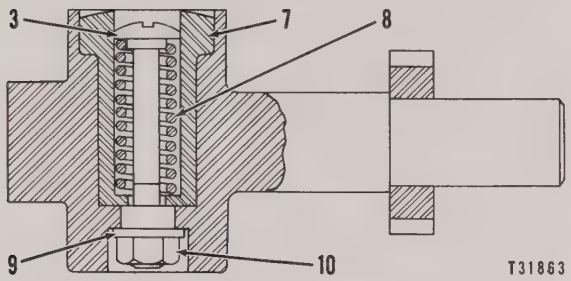

CARRIER DISASSEMBLY
3–Screw. 7–Weight. 8–Spring. 9–Washer. 10–Nut.

Guide Removal and Installation

Remove the cotter pins **(2)**, washers **(3)** and springs **(4)**.

Remove the guide **(1)**.

Install in the reverse order of removal.

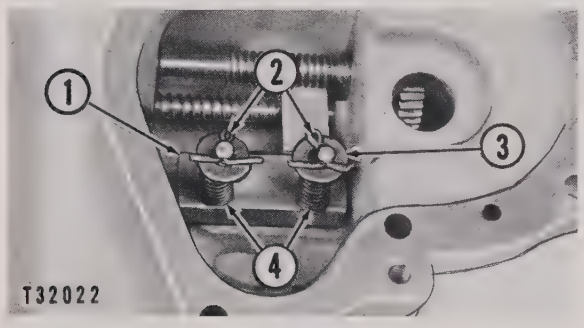

GUIDE REMOVAL
1–Guide. 2–Cotter pins. 3–Washers. 4–Springs.

Worm Shaft and Follower Removal and Installation

With the service meter removed, remove the snap rings **(1)** and the worm shaft **(2)**.

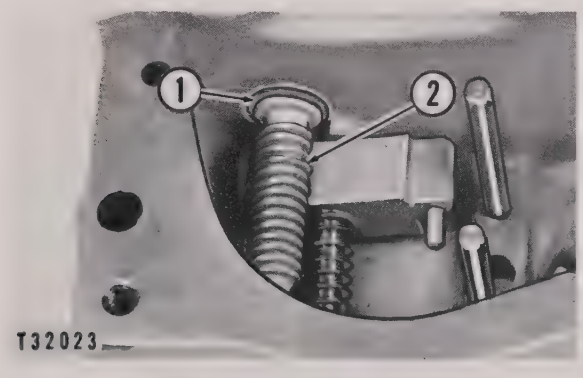

WORM SHAFT REMOVAL
1–Snap ring. 2–Worm shaft.

NOTE

The follower shaft **(6)** is pressed into the housing **(3)**. To remove the follower **(4)** and spring **(5)**, it is necessary to damage the shaft **(6)**.

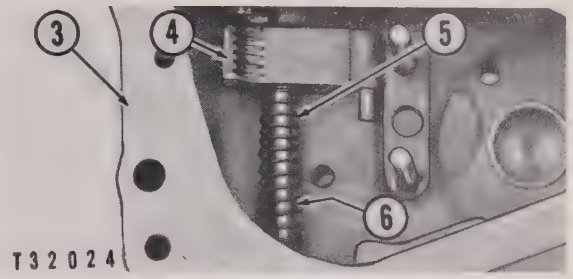

FOLLOWER REMOVAL
3–Housing. 4–Follower. 5–Spring. 6–Shaft.

Install in the reverse order of removal, pressing in a new shaft **(6)**.

Safety Release Rod Removal and Installation

Back off the nut **(2)** and remove the release rod **(1)** and the nut **(2)** as an assembly. The nuts **(3)** then can be removed together.

NOTE

The nuts **(3)** serve only as a guide for the lower end of the release rod **(1)**.

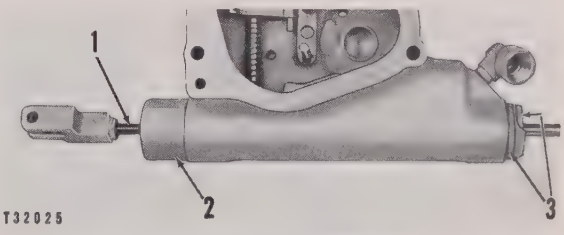

RELEASE ROD REMOVAL
1–Release rod. 2–Nut. 3–Nuts.

Install in the reverse order of removal.

Disassembly and Assembly

NOTE

Before disassembling the release rod assembly, take an overall length measurement **(L)** of the assembly from point A to point B. This measurement will be necessary for correct assembly of the release rod.

1. Grasp the end of the rod **(7)** and turn the rod **(2)** with link **(1)** until they separate.
2. Remove the spring **(4)**, nut **(3)** and washer.
3. The collar **(5)** can be removed from the rod **(7)** by driving out the roll pin **(6)**.
4. Assemble in the reverse order of disassembly.

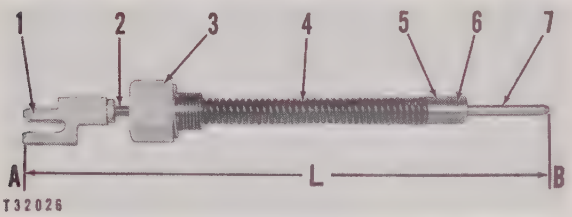

PREPARING TO DISASSEMBLE RELEASE ROD
1–Link. 2–Rod. 3–Nut. 4–Spring. 5–Collar. 6–Roll pin. 7–Rod. A and B–Extreme points of release rod. L–Overall length of rod.

5. Adjust the release rod assembly to the length **(L)** previously measured.

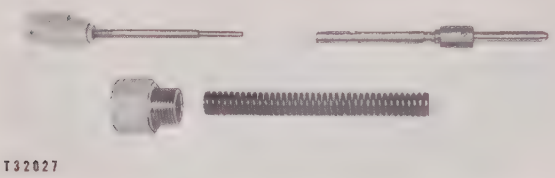

RELEASE ROD DISASSEMBLED

Release Lever Removal and Installation

Remove the bolt **(1)** from the housing.

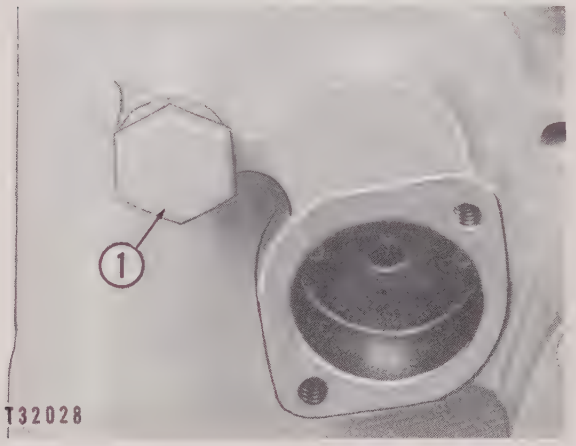

PREPARING TO REMOVE RELEASE LEVER
1–Bolt.

Lift out the release lever **(3)** and the spring **(2)** from the inside of the housing.

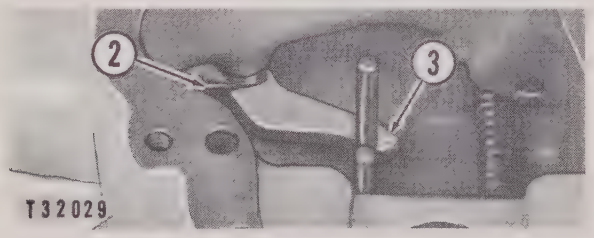

RELEASE LEVER REMOVAL
2–Spring. 3–Lever.

Install in the reverse order of removal.

FUEL RACK SHUT-OFF GROUP

Removal and Installation

1. Remove the safety shut-off control and adapter as described in the covering topics.
2. Remove the bolts **(3)** which hold the fuel rack shut-off **(5)** to the accessory drive housing and remove the fuel rack shut-off.
3. Remove the governor **(2)** as described in the topic, GOVERNOR REMOVAL.
4. Remove the covers **(1)** and **(4)**.

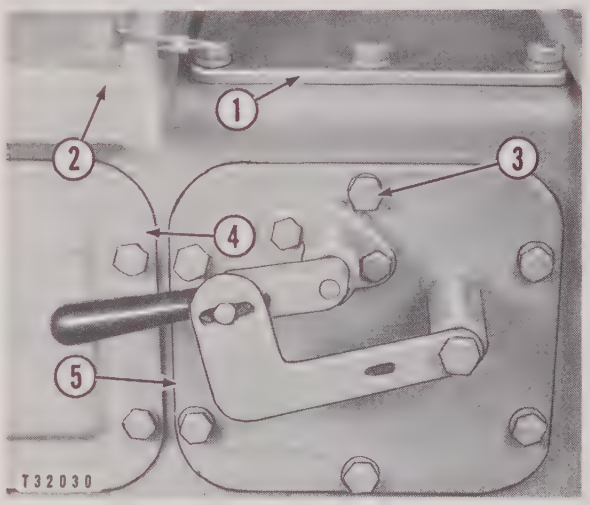

FUEL RACK SHUT-OFF REMOVAL
1–Cover. 2–Governor. 3–Bolt. 4–Cover. 5–Fuel rack shut-off.

5. Remove the snap ring **(6)** and remove the spring and plunger **(7)**.
6. Install in the reverse order of removal, properly sealing the governor.

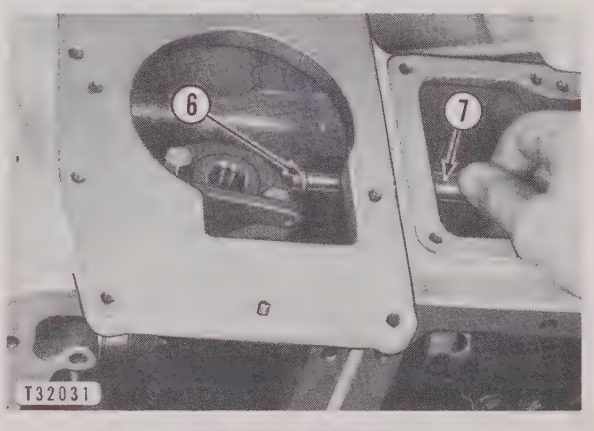

PLUNGER REMOVAL
6–Snap ring. 7–Plunger.

Disassembly and Assembly

1. Remove the pin and washer **(7)**.
2. Remove the roll pin **(3)** and remove the lever **(4)** and shaft **(8)**.

NOTE

The snap ring **(9)** is used only to locate the shaft **(8)** and keep it from working out. The position of the lever **(4)** and roll pin **(3)** on the shaft **(8)** prevents the shaft from working in.

3. Remove the nuts **(6)** and bolts, and remove the bracket **(2)**.
4. Remove the bolt **(1)** which holds the lever **(5)** to the plate **(10)** and remove the lever.

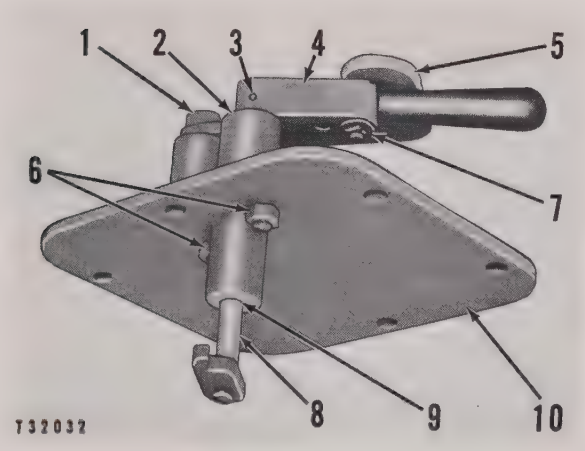

PREPARING TO DISASSEMBLE FUEL RACK SHUT-OFF GROUP
1–Bolt. 2–Bracket. 3–Roll pin. 4–Lever. 5–Lever. 6–Nuts. 7–Washer. 8–Shaft. 9–Snap ring. 10–Plate.

5. Assemble in the reverse order of disassembly.

Safety Shut-off Controls

INTRODUCTION

The safety shut-off control **(1)** is mounted on the fuel pump and governor drive housing and is driven by the fuel pump and governor drive shaft.

Engine lubricating oil pressure is used to actuate the shut-off control. The tube **(3)** provides the pressure, or supply, oil for the line leading to the water temperature shut-off control valve. Line **(5)** supplies pressure oil to the shut-off control.

An overspeed governor is incorporated in the shut-off control.

The emergency shut-off button **(8)** works in conjunction with the overspeed shut-off and provides the operator with an emergency shut-off.

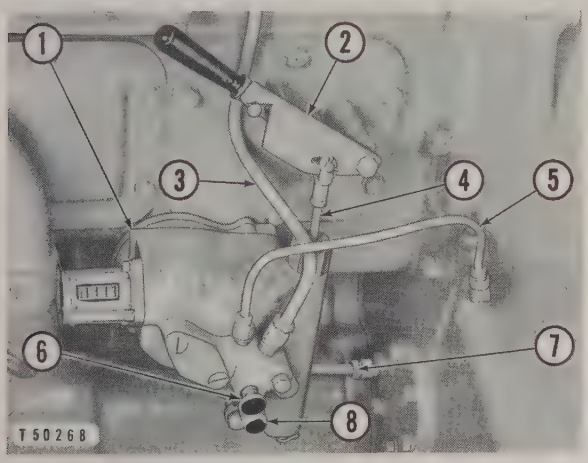

SAFETY SHUT-OFF CONTROL (RACK SHUT-OFF ARRANGEMENT)
1–Shut-off control. 2–Fuel rack shut-off. 3–Tube (pressure oil connection to water temperature shut-off). 4–Release rod. 5–Pressure oil line to shut-off control. 6–Reset button. 7–Lubricating oil drain line. 8–Emergency shut-off button.

The shut-off control release rod **(4)** will actuate either an air flapper valve or a fuel rack shut-off **(2)**.

The reset button **(6)** is used to reset the control after the engine has been stopped by the control.

NOTE

It is not necessary to reset the control after a normal shut-down.

The shut-off mechanisms receive lubricating oil from the accessory drive housing through a small hole in the service meter drive shaft. Oil enters the hole in the form of a mist. It flows through the shaft and out the shaft bearings to drain down over the control mechanism. Lubricating oil leaves the housing through the external drain line **(7)**.

It is important that the drain line be kept open. If the control housing fills with lubricating oil, the overspeed mechanism will not operate properly. An excess of oil in the housing tends to raise the overspeed limit.

OPERATION

Low Oil Pressure Shut-off and Water Temperature Shut-off

The oil pressure control will stop the engine should the lubricating oil pressure drop below the safe operating range, or, if an overheating condition occurs. Excessively hot water opens a shut-off control valve which simulates low oil pressure.

Under normal engine operating conditions, engine lubricating oil is directed from the timing gear housing through the supply line **(5)**, see previous illustration, to the cover **(4)**. This oil is then directed against the control piston **(6)**.

One end of the worm follower **(2)** is piloted into the guide **(5)**. The follower is free to pivot about a fixed shaft **(3)** in the housing and is actuated by the horizontal movement of the guide **(5)**.

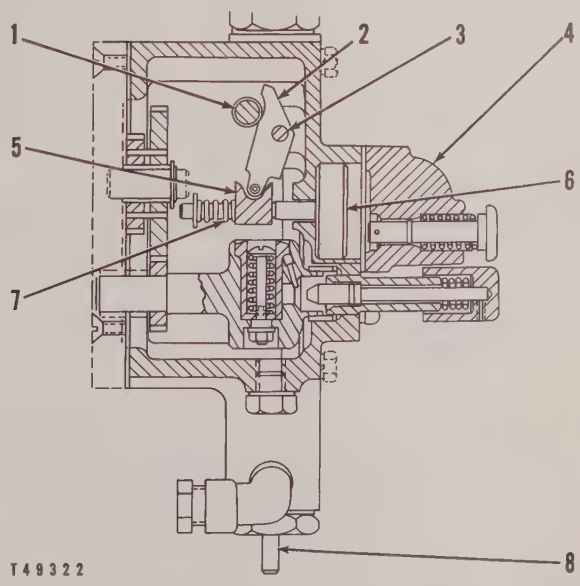

SHUT-OFF CONTROL
(Cross-Sectional Front View – Normal Operation)
1–Worm shaft. 2–Follower. 3–Follower shaft. 4–Cover. 5–Guide. 6–Piston. 7–Spring. 8–Release rod.

The worm shaft **(1)** is driven by the service meter drive shaft and rotates any time the engine is operating.

When the engine oil pressure is within the safe operating range, the piston **(6)** is held against the guide **(5)** compressing the spring **(7)** and pivoting the follower **(2)** out of mesh with the worm shaft **(1)**.

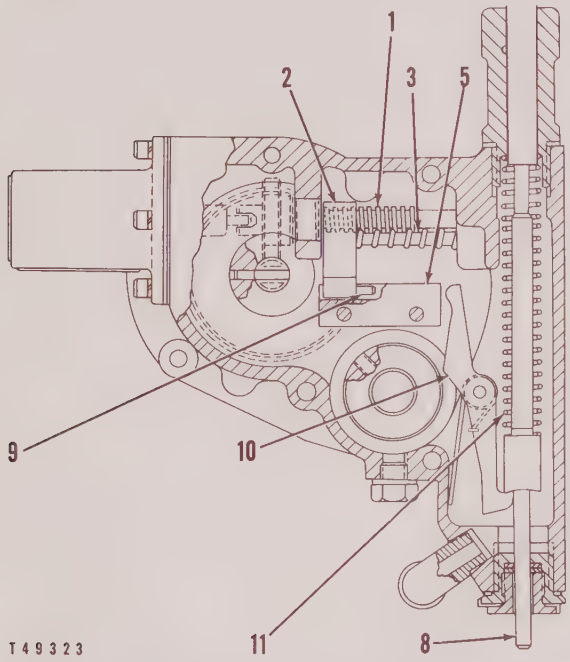

SHUT-OFF CONTROL
(Cross-Sectional Side View – Normal Operation)
1–Worm shaft. 2–Follower. 3–Follower shaft. 5–Guide. 8–Release rod. 9–Pin. 10–Release lever. 11–Spring.

Should the lubricating oil pressure drop below normal operating range, the oil pressure actuating the piston **(6)** will also drop and the spring **(7)** will force the guide **(5)** back and the piston **(6)** to the rear of its chamber, and cause the follower **(2)** to pivot on shaft **(3)** and mesh with the worm shaft **(1)**.

With the follower **(2)** engaged with the worm shaft **(1)**, the follower will travel the length of the worm shaft **(1)** which is turning at one-half engine speed. As the follower reaches the end of its travel, the pin **(9)** on the follower makes contact with the release lever **(10)**. The release lever is then tripped and releases the rod **(8)** which is forced downward by the spring **(11)**.

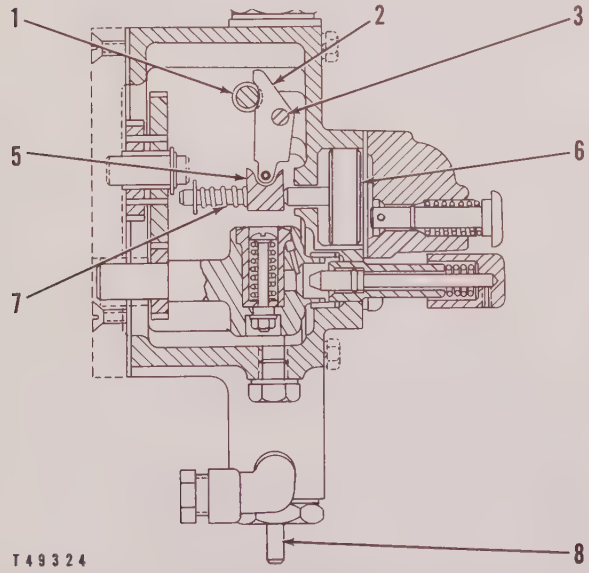

SHUT-OFF CONTROL
(Cross-Sectional Front View During Shut-off Operation)
1–Worm shaft. 2–Follower. 3–Follower shaft. 5–Guide. 6–Piston. 7–Spring. 8–Release rod.

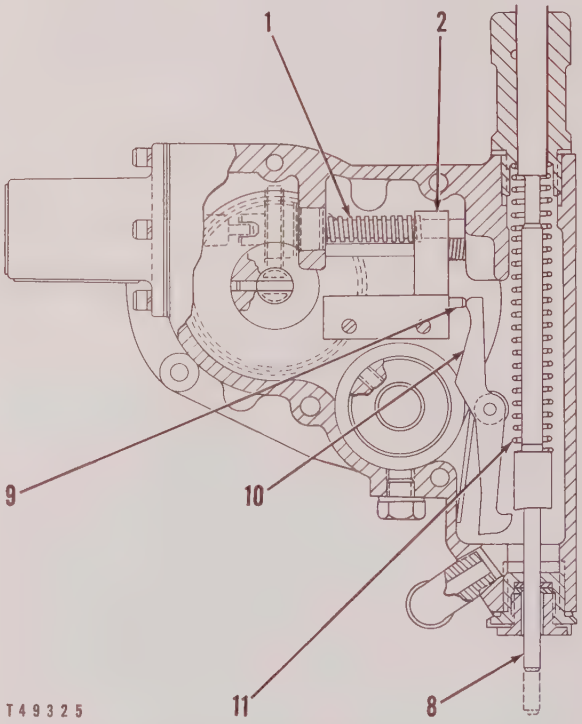

SHUT-OFF CONTROL
(Cross-Sectional Side View During Shut-off Operation)
1–Worm shaft. 2–Follower. 8–Release rod. 9–Pin. 10–Release lever. 11–Spring.

The release rod **(8)** moving downward will pull the lever **(15)** down. Lever **(15)** pulls the lever **(14)** down allowing the arm **(13)**, which is fastened to the lever **(14)**, to move forward contacting the shaft **(12)**.

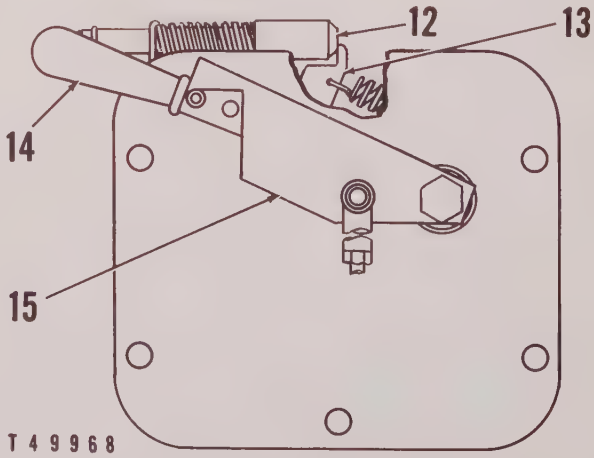

RACK SHUT-OFF
12–Shaft. 13–Arm. 14–Lever. 15–Lever.

Arm **(13)** moves the shaft **(12)** forward, contacting the fuel injection pump rack and moving the rack to the off position and stopping the engine.

On engines equipped with an air flapper valve, a cable is attached to the upper end of the release rod **(8)**, and is used to actuate the air flapper valve located on the air inlet manifold.

Overspeed Shut-off

Should an overspeeding condition occur, the overspeed shut-off control located in the shut-off control housing will actuate the release rod and then either the fuel rack shut-off or the air flapper valve.

The overspeed carrier assembly **(1)** is driven by the service meter shaft and rotates whenever the engine is operating. Within the carrier flange is a rotating weight **(2)** held toward the center of the carrier shaft by an adjusting screw, spring and nut.

As the engine RPM increases, the centrifugal force acting on the weight increases and the weight moves out of the carrier flange. This movement of the weight continues until the spring force (tending to hold the weight in) is equal to the centrifugal force (tending to throw the weight out).

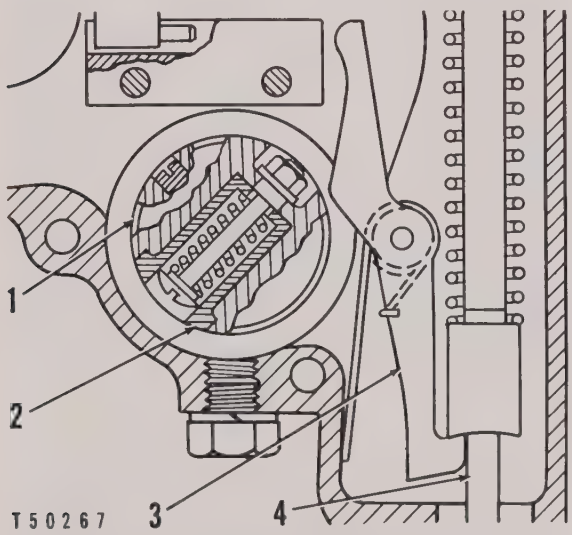

OVERSPEED CONTROL
1–Carrier assembly. 2–Rotating weight. 3–Release lever. 4–Release rod.

When the engine overspeeds, the weight will continue to move out of the carrier flange until it makes contact with the release lever **(3)** and releases the release rod **(4)** which is attached to the fuel rack shut-off or an air inlet flapper valve. In either case the engine will be stopped.

Emergency Shut-off

The emergency shut-off button **(5)** should never be used for normal engine shut down. Under normal conditions all load would be removed from the engine and the engine slowed to low idle before shutting the engine off.

If an emergency situation is encountered where the engine should be shut down immediately, push the emergency shut-off button and hold the button in until the rack has been moved to the shut-off position.

By pushing the button **(5)**, the plunger **(4)** acts against the pin **(3)** which forces the spring-loaded weight **(1)** out of the carrier assembly **(2)** creating the same condition as overspeeding.

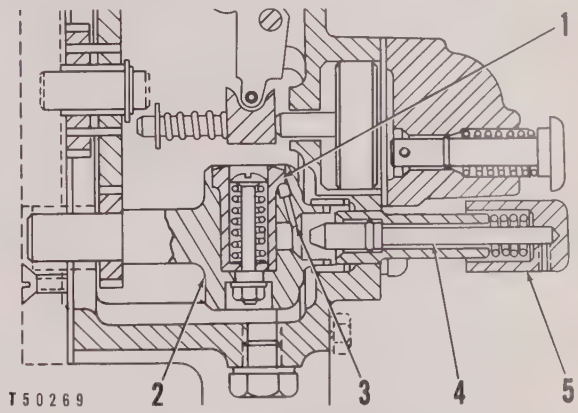

EMERGENCY SHUT-OFF
1–Weight. 2–Carrier assembly. 3–Pin. 4–Plunger. 5–Button.

RESETTING THE CONTROL

Whenever the engine has been shut down by the safety shut-off control, the reason for the shut-down must be corrected and the control reset before the engine can be restarted.

Overspeed Shut-down

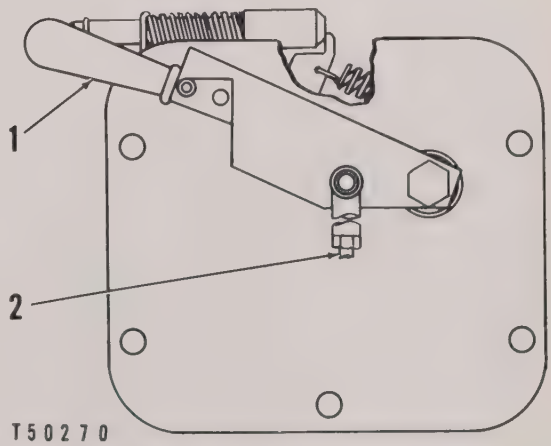

SHUT-OFF CONTROL RESET
1–Lever. 2–Release rod.

The spring-loaded release rod **(2)** is relatched by pulling up on the fuel rack shut-off lever **(1)**, or by moving the air flapper valve lever toward the rear of the engine.

The engine can now be started.

Low Oil Pressure, Water Temperature Shut-down

Push the reset button **(4)** on the side of the shut-off control housing. This manually moves the control piston **(3)** and pin against the follower guide **(1)**. The movement of the guide pivots the worm follower **(2)** away from the end of the worm shaft and allows the spring to return the follower to the start of the worm shaft threads.

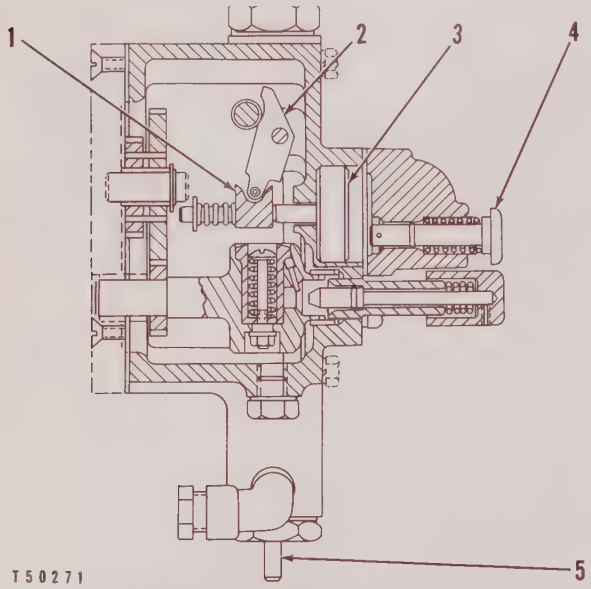

SHUT-OFF CONTROL RESET
1–Follower guide. 2–Follower. 3–Piston. 4–Reset button. 5–Release rod.

Latch the spring-loaded release rod **(5)** by pulling up on the fuel rack shut-off lever, or by moving the air flapper valve lever toward the rear of the engine.

Start the engine.

NOTE

In cold weather operation it may be necessary to push the reset button momentarily while cranking the diesel engine to prevent actuating the shut-off control. This is necessary as the oil pressure may not reach the operating range rapidly enough due to the longer cranking period usually encountered under these conditions.

Under normal operation conditions, lubricating oil pressure will reach the operating range before the follower has reached the limit of travel and actuates the release lever and rod.

OVERSPEED CONTROL ADJUSTMENT

The overspeed control mechanism is adjusted at the factory and should not be changed unless the carrier assembly has been disassembled or the adjustment disturbed in some way. The overspeed control is originally set to shut down the engine if the engine RPM rises more than 18% above full load RPM.

The adjustment is made by removing the plug from the bottom of the shut-off housing to gain access to the weight adjusting screw. It may be necessary to rotate the flywheel until the adjusting screw can be reached with a screwdriver as illustrated.

CAUTION

Always turn the crankshaft in the direction of normal rotation (counterclockwise when viewed from the flywheel). If the crankshaft is turned in a clockwise direction it is possible to damage the worm shaft and follower.

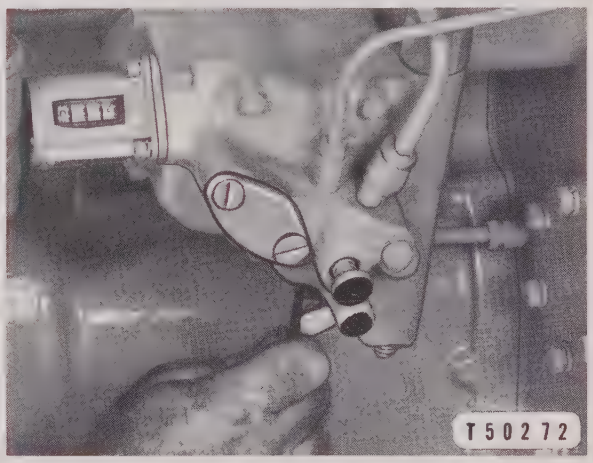

ADJUSTING THE WEIGHT SPRING TENSION

One complete turn of the adjusting screw will vary the maximum overspeed limit from 45 to 50 RPM. Clockwise rotation of the adjusting screw will compress the spring and raise the maximum speed limit, while counterclockwise rotation of the screw will allow the spring to expand and lower the maximum speed limit.

SAFETY SHUT-OFF CONTROL

The following illustrations show the safety shut-off control installed with the fuel rack shut-off arrangement. The safety shut-off control used with the air flapper valve is similar and the procedures described apply to both installations.

Removal and Installation

Replace all damaged gaskets before installing on the engine.

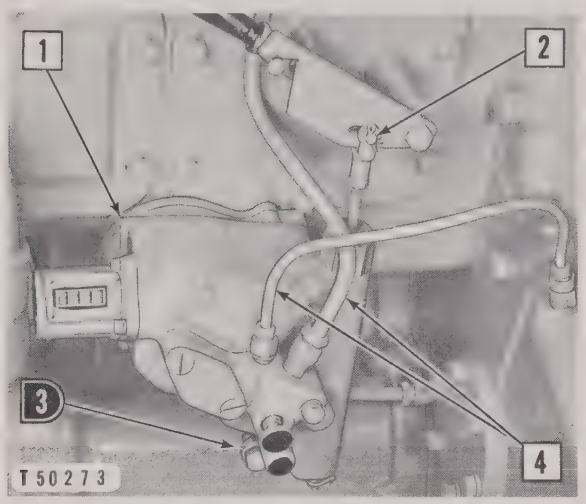

SAFETY SHUT-OFF CONTROL REMOVAL

☐ Remove ◗ Disconnect

1–Safety shut-off control. 2–Pin. 3–Oil drain line. 4–Oil lines.

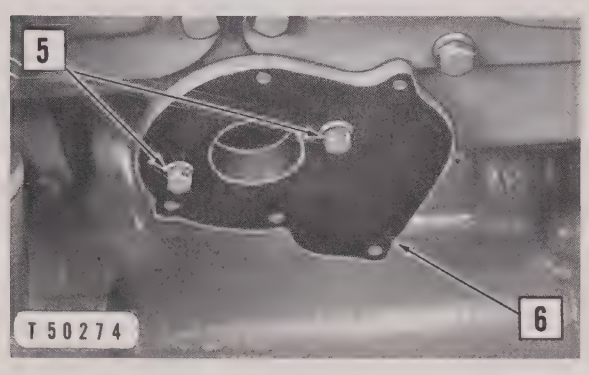

ADAPTER PLATE REMOVAL

☐ Remove

5–Bolts. 6–Adapter plate.

Reset Button and Piston Removal and Installation

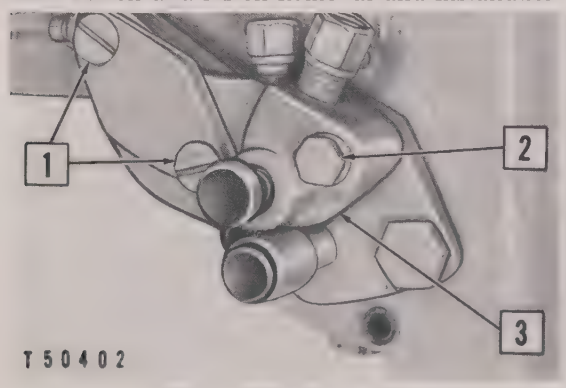

RESET BUTTON REMOVAL

☐ Remove

1–Screws and cover. 2–Bolt. 3–Cover assembly.

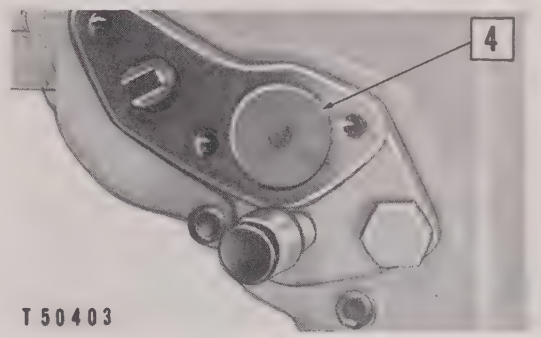

PISTON REMOVAL

☐ Remove

4–Piston.

Replace the mounting gasket if damaged.

Reset Button Disassembly and Assembly

Inspect the O-ring seal (3) and replace if damaged.

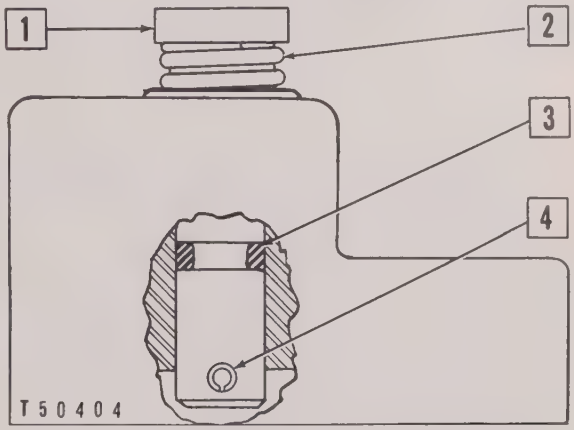

RESET BUTTON DISASSEMBLY

☐ Remove

1–Button. 2–Spring. 3–O-ring seal. 4–Pin.

Emergency Shut-off Button Removal and Installation

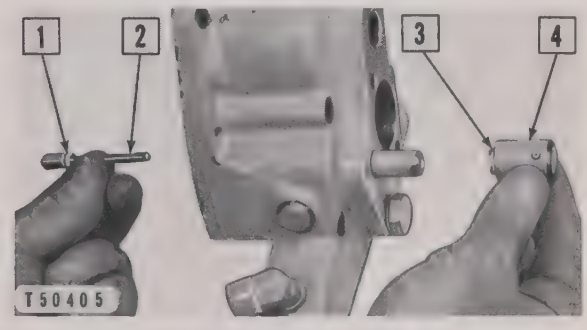

EMERGENCY SHUT-OFF BUTTON REMOVAL

☐ Remove

1–O-ring seal. 2–Plunger. 3–Spring. 4–Button.

Inspect the O-ring seal **(1)** and replace if damaged.

Inspect the plunger **(2)** for wear or damage and replace if necessary.

Service Meter Removal

The service meter can be removed by removing the hollow head screws securing it to the shut-off control housing.

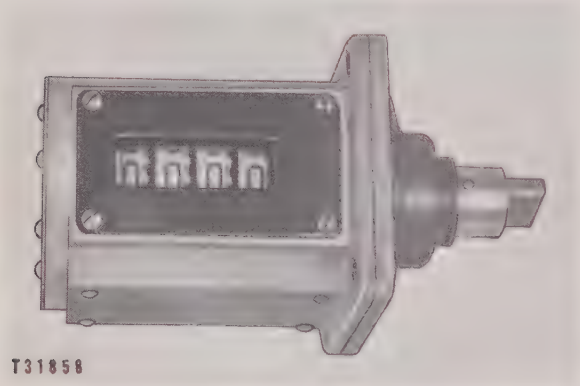

SERVICE METER

Individual parts of the meter are not serviced.

When installing the service meter, align the tang on the service meter shaft with the mating slot in the drive shaft.

Drive and Adapter Removal and Installation

The drive and adapter assembly **(3)** can be removed from the control housing **(1)** after removal of the screws **(2)**.

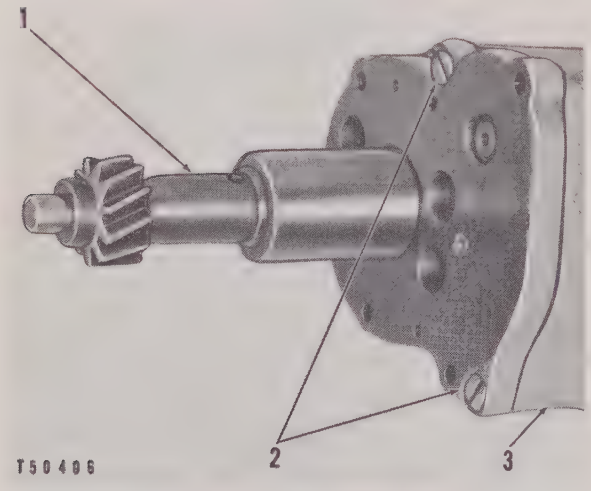

DRIVE AND ADAPTER REMOVAL
1–Drive and adapter assembly. 2–Screws. 3–Housing.

Install in the reverse order of removal, using a new gasket.

Disassembly and Assembly of Drive Assembly

1. Remove the snap ring **(4)**, washer **(3)**, gear **(2)** and another gear not shown from the shaft **(5)**, which is pressed into the adapter **(1)**.
2. After removing the gear **(2)**, drive out the spring pins **(6)** and separate the two gears.
3. Remove the spring pin **(8)** and remove the gear **(7)** from the drive shaft **(9)**.
4. Remove the drive shaft **(9)** from the adapter **(1)**.

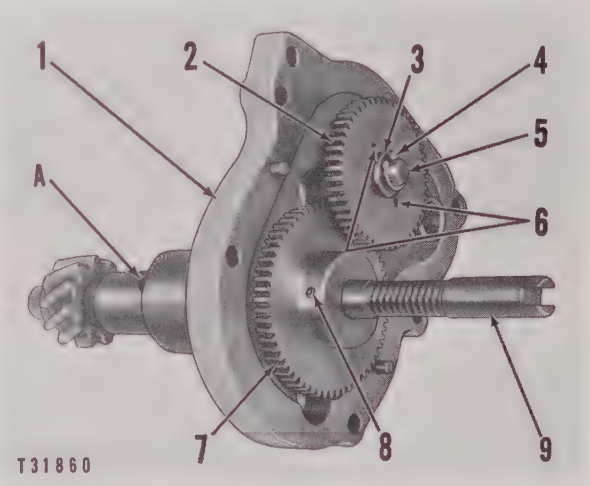

ADAPTER AND DRIVE DISASSEMBLY
A–Oil hole. 1–Adapter. 2–Gear. 3–Washer. 4–Snap ring. 5–Shaft. 6–Spring pins. 7–Gear. 8–Spring pin. 9–Drive shaft.

5. Inspect all parts for damage or wear and replace as needed.

NOTE

Oil for lubrication enters hole **(A)**.

6. Assemble in the reverse order of disassembly.

Carrier and Weight Disassembly and Assembly

With the adapter and drive shaft removed, the carrier and weight assembly **(1)** can be removed from the housing **(2)** and disassembled in the following manner:

1. Using a suitable puller, remove the gear **(5)** and replace if worn or damaged.
2. Clean up the staked area around the screw **(6)** and remove the screw from the carrier **(4)**.

NOTE

The screw **(6)** is both a guide for the weight and a safety device to keep the weight from flying out should the screw **(3)** break for any reason.

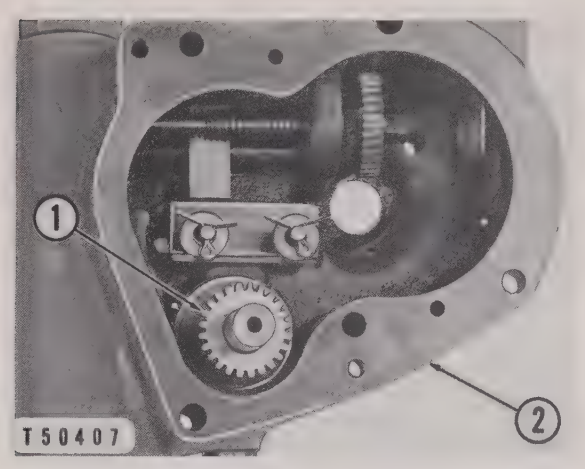

CARRIER AND WEIGHT REMOVAL
1–Carrier and weight assembly. 2–Housing.

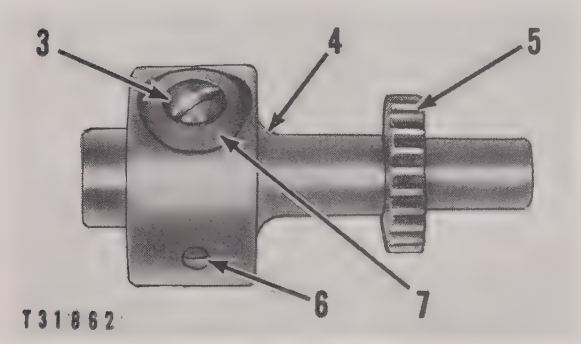

CARRIER DISASSEMBLY
3–Screw. 4–Carrier. 5–Gear. 6–Screw. 7–Weight.

3. Remove the screw **(3)** from the nut **(10)**.

NOTE

When removing the screw **(3)**, count the number of turns required to remove. When installing the screw, install with the same number of turns. After the safety shut-off has been installed on the engine, see the topic, OVERSPEED CONTROL ADJUSTMENT.

4. Remove the screw **(3)**, nut **(10)**, spring **(8)**, weight **(7)** and pin **(9)** from the carrier **(4)**.

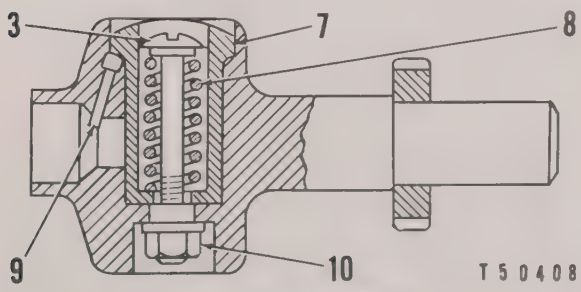

CARRIER DISASSEMBLY
3–Screw. 7–Weight. 8–Spring. 9–Pin. 10–Nut.

5. Assemble in reverse order of disassembly, restaking the area around the screw **(6)**.

Guide Removal and Installation

Check all parts for wear or damage and replace if necessary.

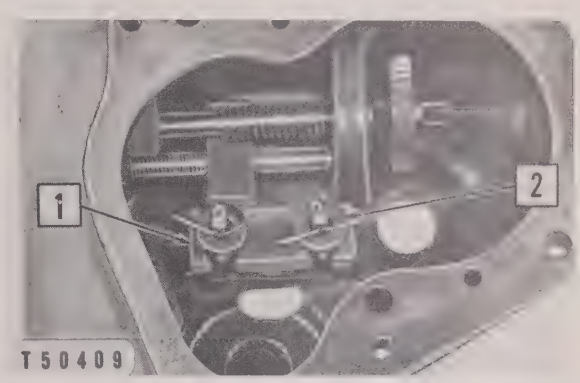

GUIDE REMOVAL
☐ Remove
1–Guide. 2–Cotter pins, washers and springs (two).

Worm Shaft and Follower Removal and Installation

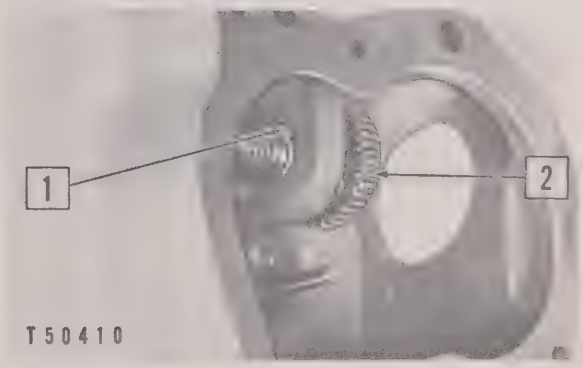

WORM SHAFT REMOVAL
☐ Remove
1–Snap ring. 2–Worm shaft.

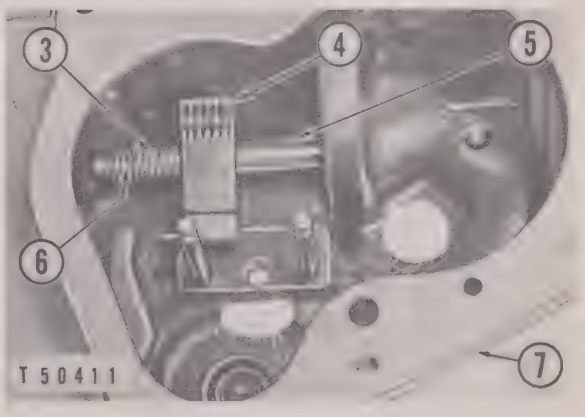

FOLLOWER REMOVAL
3–Spring. 4–Follower. 5–Spacer. 6–Shaft. 7–Housing.

NOTE

The follower shaft **(6)** is pressed into the housing **(7)**. To remove the spring **(3)**, follower **(4)** and spacer **(5)**, it is necessary to damage the shaft **(6)**.

Install in the reverse order of removal, pressing in a new shaft **(6)**.

Safety Release Rod Removal and Installation

Back off the nut **(2)** and remove the release rod **(1)** and the nut **(2)** as an assembly. The nuts **(3)** then can be removed together.

NOTE

The nuts **(3)** serve only as a guide for the lower end of the release rod **(1)**.

RELEASE ROD REMOVAL
1–Release rod. 2–Nut. 3–Nuts.

Install in the reverse order of removal.

Disassembly and Assembly

NOTE

Before disassembling the release rod assembly, take an overall length measurement **(L)** of the assembly from point A to point B. This measurement will be necessary for correct assembly of the release rod.

1. Grasp the end of the rod **(7)** and turn the rod **(2)** with link **(1)** until they separate.
2. Remove the spring **(4)**, nut **(3)** and washer.
3. The collar **(5)** can be removed from the rod **(7)** by driving out the spring pin **(6)**.

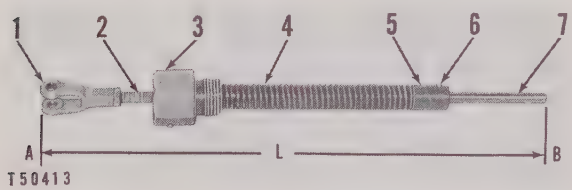

PREPARING TO DISASSEMBLE RELEASE ROD
1–Link. 2–Rod. 3–Nut. 4–Spring. 5–Collar. 6–Spring pin. 7–Rod. A and B–Extreme points of release rod. L–Overall length of rod.

4. Assemble in the reverse order of disassembly.
5. Adjust the release rod assembly to the length **(L)** previously measured.

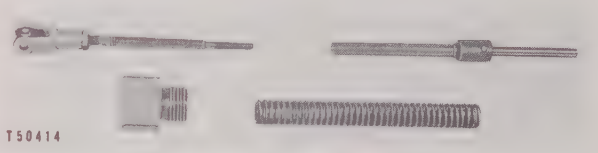

RELEASE ROD DISASSEMBLED

Release Lever Removal and Installation

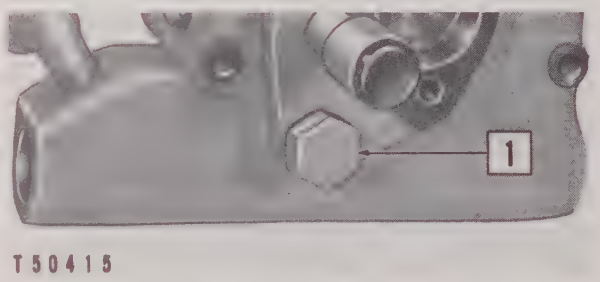

PREPARING TO REMOVE RELEASE LEVER

☐ **Remove**

1–Bolt.

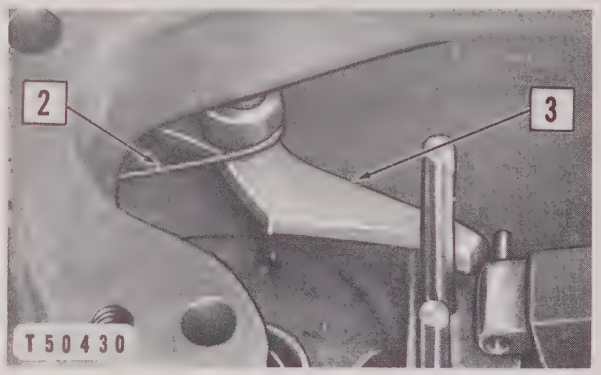

RELEASE LEVER REMOVAL

☐ **Remove**

2–Spring. 3–Lever.

Inspect all parts for wear or damage and replace if necessary.

FUEL RACK SHUT-OFF GROUP

Removal and Installation

1. Remove the safety shut-off control and adapter **(5)** as described in the covering topics.
2. Remove the bolts which hold the fuel rack shut-off **(3)** to the accessory drive housing and remove the fuel rack shut-off.

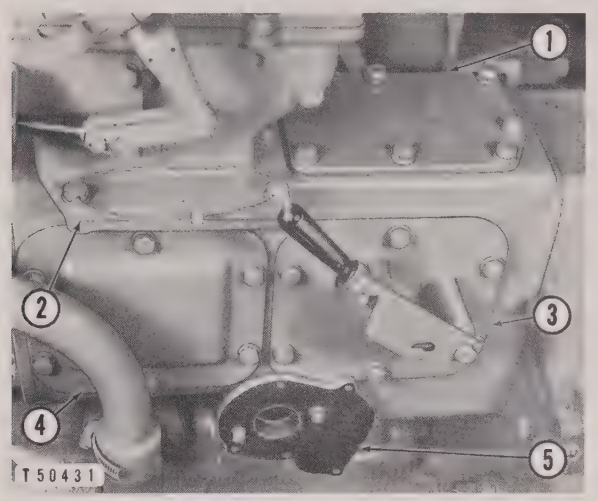

FUEL RACK SHUT-OFF REMOVAL
1–Cover. 2–Governor. 3–Fuel rack shut-off. 4–Cover. 5–Adapter.

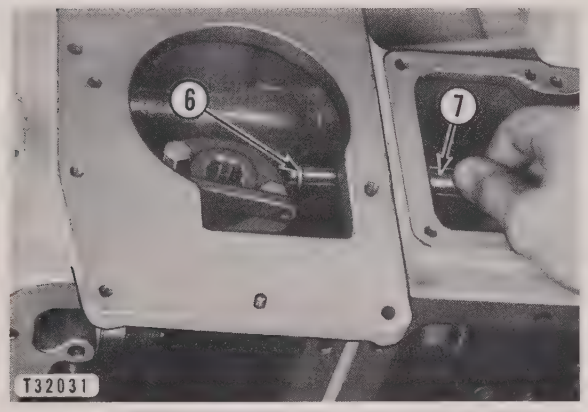

PLUNGER REMOVAL
6–Snap ring. 7–Plunger.

3. Remove the governor **(2)** as described in the topic, GOVERNOR REMOVAL.
4. Remove the covers **(1)** and **(4)**.
5. Remove the snap ring **(6)** and remove the spring and plunger **(7)**.
6. Install in the reverse order of removal, properly sealing the governor.

Disassembly and Assembly

Inspect all parts for wear or damage and replace if necessary, before assembly.

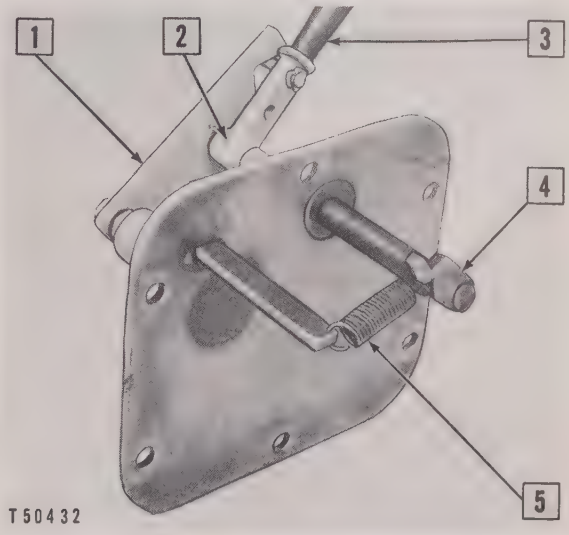

FUEL RACK SHUT-OFF GROUP DISASSEMBLY
☐ Remove
1–Lever. 2–Spring pin. 3–Lever. 4–Lever assembly. 5–Spring.

Governor Air Actuator

INTRODUCTION

The governor air actuator provides a variable speed, positive action remote control for the diesel engine. The actuator operates on an external supply of compressed air through a range of 10 PSI to a minimum pressure of 65 PSI at high idle. To avoid damage within the actuator, the air supply should never exceed a maximum pressure of 80 PSI.

Air pressure on the diaphragm in the actuator varies the travel of the rod, sleeve and link. This controls the governor through the linkage movement.

This actuator has a two-part housing, which permits inspecting or replacing the diaphragm without disturbing the adjustment of the high or low idle positions, or the actuator spring preload. See the topic, DIAPHRAGM REPLACEMENT.

DIAPHRAGM REPLACEMENT

On most installations, the diaphragm can be replaced without removing the governor air actuator housing from the diesel engine.

1. Shut off the air and disconnect the air line to the governor air actuator if it is located on the engine.
2. Remove the bolts **(3)** which hold the diaphragm housing **(2)** to the housing **(1)** and remove the diaphragm housing.

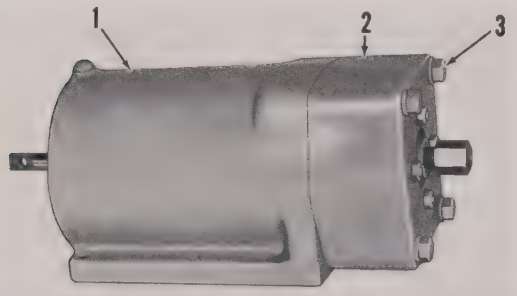

T31559

HOUSING REMOVAL
1–Housing. 2–Diaphragm housing. 3–Bolt.

3. Remove the nuts **(4)** and the nuts on the back side of the housing.
4. Disassemble the diaphragm housing by removing the guide **(5)**, diaphragm **(6)**, clamp **(7)** and clamp **(8)**.

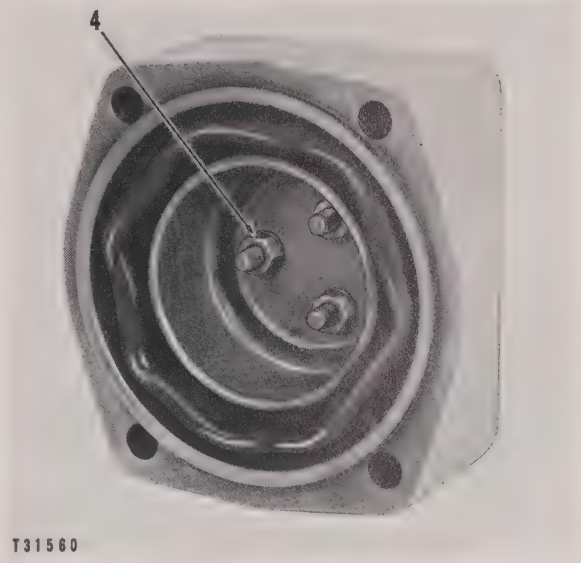

T31560

DIAPHRAGM HOUSING
4–Nut.

5. Install the parts in the reverse order of removal. Coat the diaphragm with liquid soap for easier installation in the housing. Check for air leaks.

T31561

DIAPHRAGM REMOVAL
5–Guide. 6–Diaphragm. 7–Clamp. 8–Clamp.

DISASSEMBLY AND ASSEMBLY

If access to the diaphragm only is desired, see the topic, DIAPHRAGM REPLACEMENT.

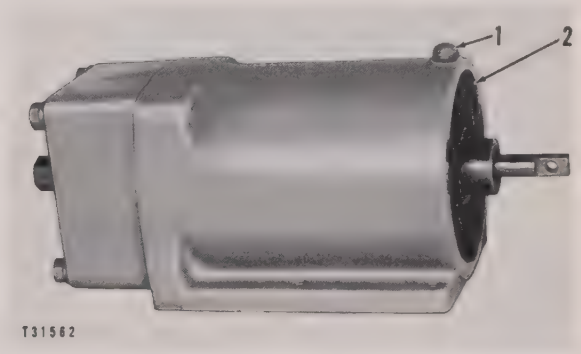

T31562

PREPARING TO REMOVE THE ACTUATOR
1–Lockscrew. 2–Retainer nut.

1. Slide out the rod **(7)**.
2. Loosen the lockscrew **(1)** until it does not protrude into the retainer nut **(2)**.
3. Turn the retainer nut **(2)** until the spring tension is released.
4. Remove the bolts and lockwashers securing the housings together, and separate the housings.

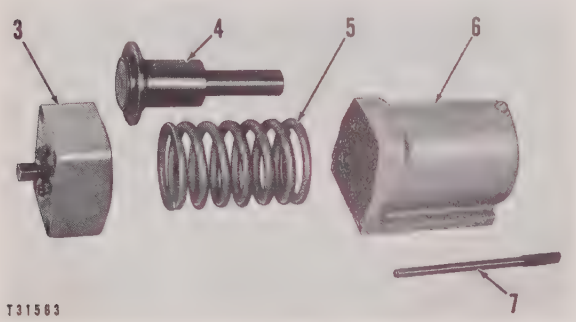

PLUNGER AND SPRING REMOVAL
3–Diaphragm housing. 4–Plunger. 5–Spring. 6–Housing. 7–Rod.

5. Remove the diaphragm housing **(3)**. For disassembly, see the topic, DIAPHRAGM REPLACEMENT.
6. Remove the plunger **(4)** and spring **(5)** from the housing **(6)**.
7. Remove the retainer nut **(2)**.
8. Remove the snap ring **(10)** from the end of the plunger **(4)** and remove the spacer **(9)** and spring **(8)** from the plunger.

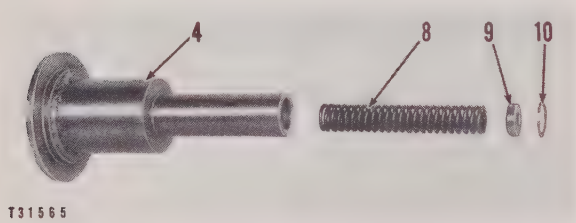

PLUNGER SPRING REMOVAL
4–Plunger. 8–Spring. 9–Spacer. 10–Snap ring.

9. Assemble the governor air actuator in the reverse order of disassembly.

NOTE

Leave the retainer nut and lockscrew loose for operating adjustment. See the topic, ADJUSTING THE GOVERNOR AIR ACTUATOR.

There are two types of plungers used in the governor air actuator. Plunger **(A)** is an iron casting and is the later type. The earlier type plunger **(B)** is a fabricated assembly. The two plungers are interchangeable in the actuator housing.

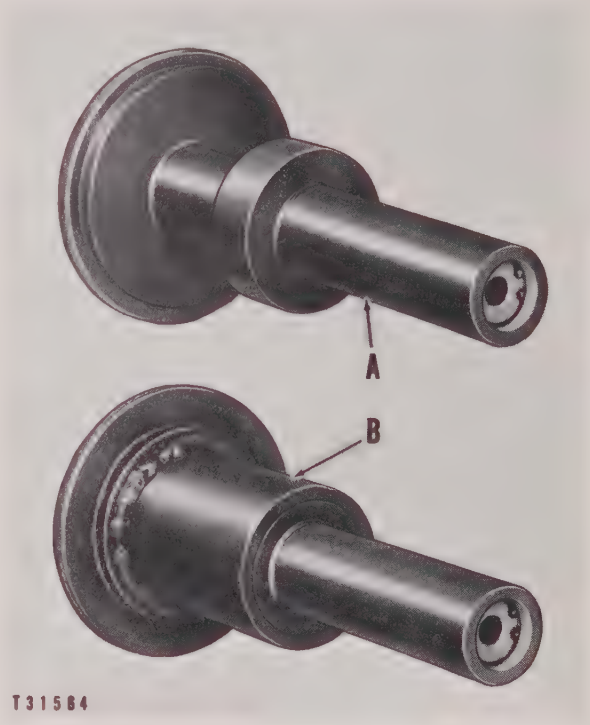

PLUNGERS
A–Later plunger. B–Earlier plunger.

GOVERNOR AIR ACTUATOR ADJUSTMENTS

If the actuator has been disassembled, three adjustments should be performed after it is installed on the engine. Actuating air pressure for high and low idle positions should be adjusted, and the correct low and high idle settings should also be obtained.

Adjusting Actuator Air Pressure

1. Start the engine and permit it to run long enough to assure proper warm up.
2. Disengage the driven equipment. With an accurate tachometer, check the high and low idle RPM. If necessary, adjust the engine high and low idle adjusting screws as required to obtain specified engine RPM.
3. Shut the engine down.
4. Install an accurate air gauge **(1)** in the air line at a convenient point between the actuator air control and the actuator **(5)** as shown.
5. Check the air supply pressure to the actuator to determine if a minimum of 65 PSI air pressure is available when the control valve is at

full throttle. Maximum air pressure is not to exceed 80 PSI.

6. Place the governor hand control lever in the low idle position.
7. Move the actuator air control lever **(2)** slowly toward the open position, while observing the plunger **(3)**. The plunger should start to move when the air gauge registers 10 PSI.

NOTE

If the plunger moves at a pressure less than 10 PSI, the preload must be increased. If more than 10 PSI pressure is required to move the sleeve, the preload must be decreased.

8. To change the preload on the actuator spring **(6)**, return the actuator air control lever to the low idle position.
9. Turn the lockscrew **(7)** out far enough to permit turning the retainer nut **(4)**.
10. To increase spring preload, turn the retainer nut clockwise. To decrease the preload, turn the retainer nut in a counterclockwise direction.
11. After the 10 PSI preload has been obtained, tighten the lockscrew **(7)** to lock the retainer nut **(4)** in place.

NOTE

It may be necessary to rotate the retainer nut to the nearest notch to align the lockscrew. Compensating pressure adjustment can be made in the remote control valve.

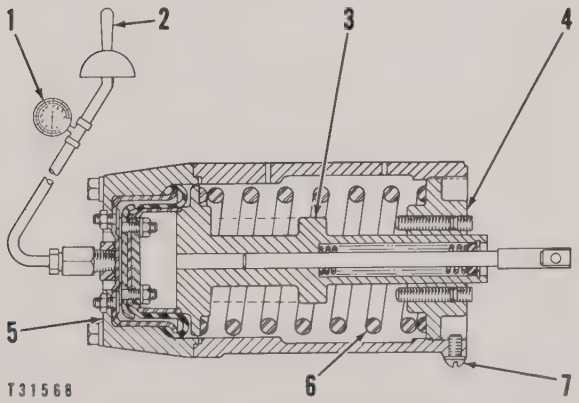

CHECKING AND SETTING ACTUATOR SPRING PRELOAD

1–Air gauge. 2–Actuator air control lever. 3–Plunger. 4–Retainer nut. 5–Actuator. 6–Actuator spring. 7–Lockscrew.

Setting Actuator Low Idle Stop Position

1. With the engine running and warmed up, check the actuator air control lever to be certain it is at the low idle position, or the position at which no air pressure is being delivered to the actuator.
2. With a hand tachometer, check the low idle RPM of the engine. If the check reveals a reading other than the low idle RPM specified, the actuator low idle adjustment must be changed.
3. To change the adjustment, remove the control linkage pins between the actuator rod and the governor.
4. To reduce the RPM, shorten the linkage rod. To increase the RPM, lengthen the linkage rod. The rod has an adjustable yoke and a selection of holes in the governor lever are provided for making the proper adjustment to give the desired low idle RPM.

Setting Actuator High Idle Stop Position

The high idle position of the actuator is controlled by adjusting the position of the two high idle adjusting screws **(3)**, since high idle is reached when the actuator plunger **(2)** moves into contact with the two high idle adjusting screws.

1. Start and warm up the engine.
2. Remove the two small setscrews **(4)** and back the two high-idle adjusting screws **(3)** out several turns.
3. Move the governor hand control lever to the full open position. The engine will then be operating at the proper high idle RPM, which was previously established.
4. Move the actuator air control lever **(1)** slowly toward the full open position until the lever reaches the end of its travel.

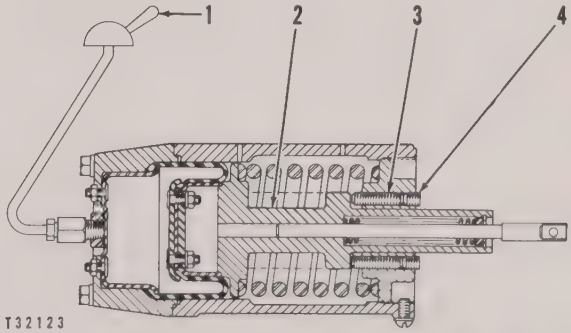

SETTING AIR ACTUATOR HIGH IDLE POSITION

1–Air actuator control lever. 2–Plunger. 3–High idle adjusting screw. 4–Setscrew.

5. Turn the two actuator high idle adjusting screws **(3)** in a clockwise direction until they just make contact with the actuator plunger **(2)**. Do not

turn the screws beyond the point where contact is made.

6. Install the two setscrews **(4)** to prevent the adjusting screws from turning.

7. Return the actuator air control lever **(1)** to its low idle position.

8. Turn the high idle adjusting screw of the engine governor counterclockwise just enough to increase the high idle RPM of the engine to approximately 30 RPM above that specified.

NOTE

This will prevent the governor stop from acting as a stop for the actuator, thus eliminating the possibility of damaging the high idle adjusting screw within the governor.

9. Return the governor hand control lever to the low idle position and move the actuator air control lever **(1)** to the full open position.

10. Check the engine high idle RPM with the actuator at this position.

NOTE

The engine should be operating at specified high idle RPM if the adjusting screws **(3)** have been properly adjusted as described earlier.

11. If a reading other than that specified for the engine is obtained, minor adjustments should be made with the adjusting screws.

NOTE

Any time the adjusting screws **(3)** are turned, they both must be turned the same amount and same direction. This is essential since the plunger **(2)** must contact both adjusting screws simultaneously.

Torque Converter Output Shaft Governor

(Variable Speed)

The output shaft governor **(2)**, servo piston assembly **(1)** and related linkage are mounted on the left side of the engine slightly behind and below the engine governor housing.

The output shaft governor is driven by a flexible cable assembly **(3)** which connects to the governor on one end. The other end connects to a drive mechanism **(4)** located in the output shaft housing. A ring gear on the torque converter output shaft meshes with a worm gear which is an integral part of the governor drive shaft. This shaft drives the flexible cable.

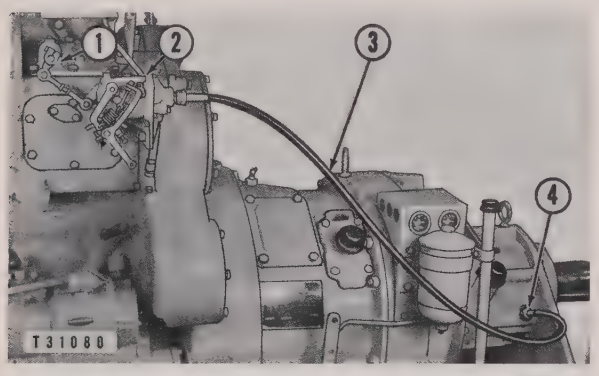

OUTPUT SHAFT GOVERNOR
1–Servo piston assembly. 2–Output shaft governor. 3–Flexible cable. 4–Governor drive.

OPERATION

The output shaft governor acts as an "assistant operator", automatically reducing engine speed, which in turn reduces converter output shaft speed whenever the load on the converter output shaft decreases. Thus, it acts as a speed limiting device by preventing the output shaft and driven equipment from suddenly and perhaps dangerously, overspeeding. This also relieves the operator of making speed adjustments through the engine governor.

The torque converter output shaft maximum speed is either a high speed setting or a low speed setting, which is determined by changing the position of the speed change lever **(13)**, normally by remote control. The high speed screw **(10)** determines the maximum speed for the high speed setting, and the low speed screw **(11)** determines the maximum low speed setting. In other words, for either setting there is a predetermined maximum speed which the output shaft can not exceed.

The operation of the governor is the same as with most rotating weight-type governors. The governor operates only when the torque converter output shaft attempts to exceed a predetermined maximum speed. This speed is determined by the amount of tension placed on the governor spring **(12)**. On a variable speed governor, the spring tension is controlled by the rate adjusting screw **(8)** and the position of the speed change lever. Increasing the spring tension increases the maximum speeds.

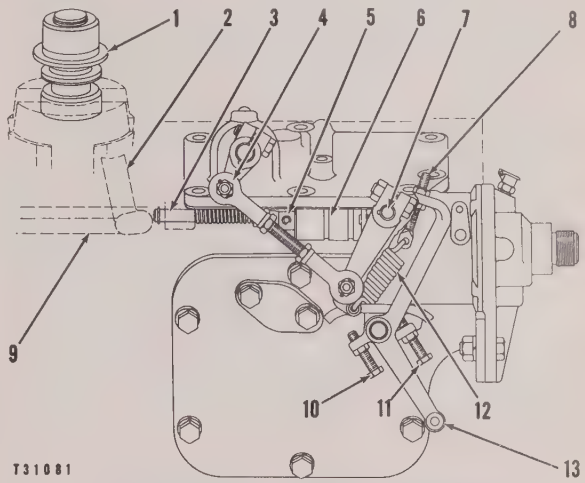

OUTPUT SHAFT GOVERNOR OPERATION
1–Retainer and bearing assembly. 2–Diesel engine governor lever. 3–Rack follower rod. 4–Linkage. 5–Valve. 6–Piston. 7–Rocker shaft. 8–Rate adjusting screw. 9–Fuel rack. 10–High speed screw. 11–Low speed screw. 12–Governor spring. 13–Speed change lever.

When the output shaft speed approaches the predetermined governed speed setting, the weights **(20)** are forced out moving the thrust sleeve **(19)** and bearing assembly **(18)** against the rocker yoke **(17)**. As the output shaft speed reaches the predetermined governor speed setting, the force of the weights overcomes the force of the governor spring and the rocker yoke is moved, rotating the rocker shaft **(7)**. Linkage **(4)** attached to the rocker shaft overrides the diesel engine governor and reduces engine speed which in turn reduces converter output shaft speed. As the rocker yoke moves outward, it contacts a small bumper spring **(16)** in the end of the governor body, which dampens oscillation of the yoke preventing erratic governor control. An adjusting bolt positions the bumper spring.

As torque converter output shaft speed drops below the maximum governed speed limit, the force exerted by the output shaft governor weights is reduced. Since the governor is then no longer effective, the diesel engine governor takes over full engine control and increases engine speed toward its full governed setting.

The actuating linkage **(4)** acts through a simple

follow-up type hydraulic servo mechanism. This consists essentially of a piston **(6)** and valve **(5)**, a cylinder **(14)** which is integral with the cover assembly, and the necessary connecting linkage. The valve, which is directly connected through mechanical linkage to the governor rocker shaft, fits into the bore of the piston and the piston fits into the cylinder in the cover assembly. Engine oil **(15)** flows into the chamber behind the piston and normally flows through passages in the piston and valve and returns to the engine crankcase. When the output shaft governor becomes effective due to output shaft overspeeding, the governor rocker shaft **(7)** moves the linkage and results in movement of the valve away from the piston. When the valve moves, lands on the valve close off the flow of oil through the piston. This restriction results in an oil pressure build-up behind the piston and the piston is moved a corresponding amount to follow the movement of the valve. Oil pressure forces the piston to continue to follow the valve movement until the port in the valve is again uncovered allowing the relief of the oil pressure.

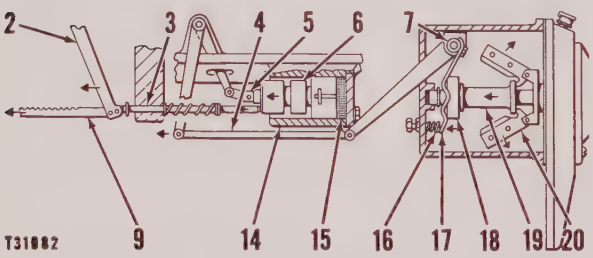

OUTPUT SHAFT GOVERNOR OPERATION (SCHEMATIC)
2–Diesel engine governor lever. 3–Rack follower rod. 4–Linkage. 5–Valve. 6–Piston. 7–Rocker shaft. 9–Fuel rack. 14–Cylinder. 15–Engine oil. 16–Bumper spring. 17–Yoke. 18–Bearing assembly. 19–Thrust sleeve. 20–Rotating weights.

Movement of the piston moves the rack follower rod **(3)**, diesel engine governor lever **(2)**, and fuel rack **(9)** to the left, partially closing the rack and reducing the output shaft speed to the governed setting. The retainer and bearing assembly **(1)** is spring-loaded and permits movement of the lever **(2)** without compressing the diesel engine governor spring.

When the load on the output shaft is increased, the output shaft speed is reduced and the force exerted by the output shaft governor weights decreases. The force exerted by the output shaft governor spring then overcomes the force exerted by the weights and the actuating linkage moves the servo mechanism valve into the piston. The movement of the valve into the piston uncovers dump ports and allows oil to flow unrestricted through the servo mechanism. When the valve and piston move into the cylinder in the servo cover assembly, the spring-loaded rack follower rod moves away from the engine governor lever and the fuel rack. The diesel engine governor then takes over full control of the engine and the fuel rack moves in the direction of increased fuel, increasing engine speed to its full governed speed.

The whole operational sequence of the torque converter overriding the diesel engine governor and then relinquishing control again to the engine governor occurs each time the load variations are severe enough to permit the output shaft speed to increase and activate the output shaft governor.

REMOVAL AND INSTALLATION OF GOVERNOR AND SERVO MECHANISM

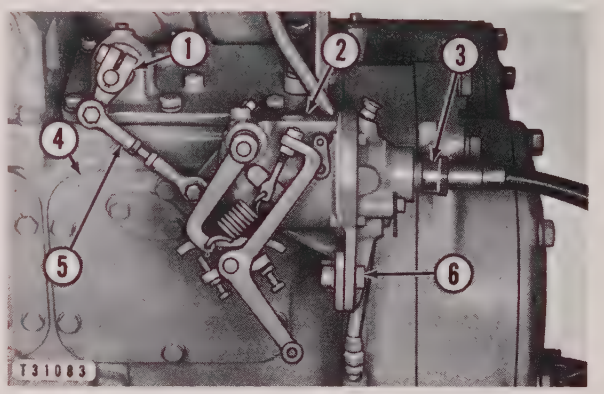

PREPARING TO REMOVE OUTPUT SHAFT GOVERNOR
1–Lever. 2–Output shaft governor. 3–Flexible drive cable. 4–Cover. 5–Rod end. 6–Bolts.

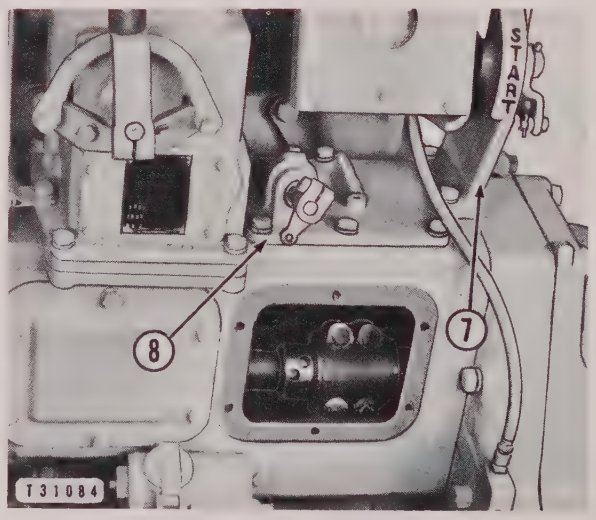

PREPARING TO REMOVE COVER ASSEMBLY
7–Compression release lever bracket. 8–Cover assembly.

1. Disconnect the flexible drive cable **(3)** from the output shaft governor **(2)**.
2. Disconnect the rod end **(5)** from the lever **(1)**.
3. Remove the bolts that secure the cover **(4)** to the governor drive housing.

NOTE

The output shaft governor is removed from the cover by removing the bolts **(6)**.

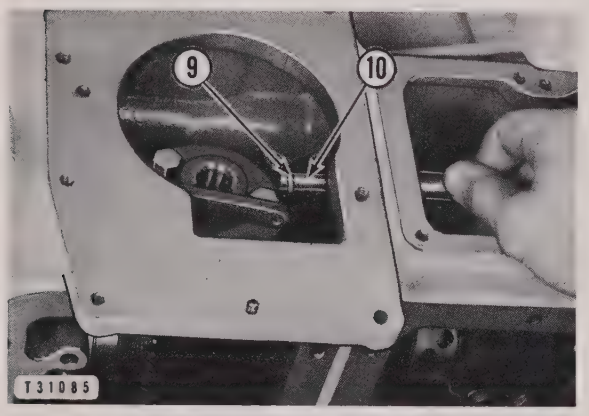

REMOVING LINK ROD
9–Snap ring. 10–Link rod.

4. Remove the output shaft governor assembly and the cover as a unit.
5. Remove the compression release lever bracket **(7)** from the cover assembly **(8)**.
6. Remove the bolts which secure the cover assembly **(8)** to the governor drive housing and remove the cover assembly.
7. Remove the diesel engine governor. See the covering topic.

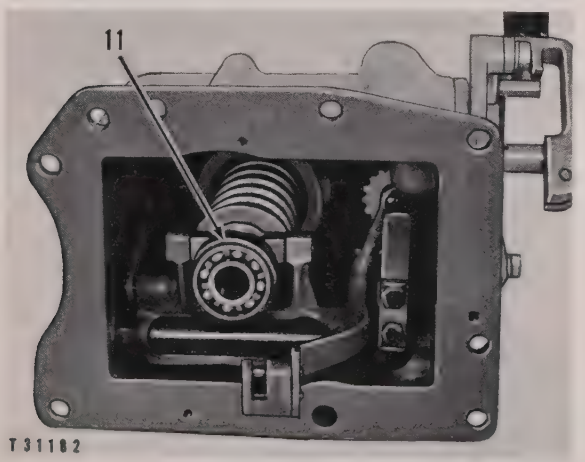

REMOVING THE CAGE AND SLEEVE ASSEMBLY
11–Bearing and retainer assembly.

8. Remove the snap ring **(9)** from the link rod **(10)**.
9. Remove the link rod and spring from the governor drive housing.
10. Remove the bearing and retainer assembly **(11)** as a unit from the diesel engine governor.

NOTE

The bearing and retainer **(11)** is spring-loaded on engines equipped with an output shaft governor.

11. Install in reverse order, replacing any worn or damaged parts.

DISASSEMBLY AND ASSEMBLY OF GOVERNOR

1. Remove the screws and lockwashers securing the flange **(11)** to the body **(9)**, and separate the body from the flange.
2. Replace the seal **(8)** in the flange if necessary. Install with the lip pointing toward the governor.
3. Remove the bearings **(3)** and **(7)** from the shaft **(6)**. The weights **(4)** and sleeve **(5)** are also replaceable.

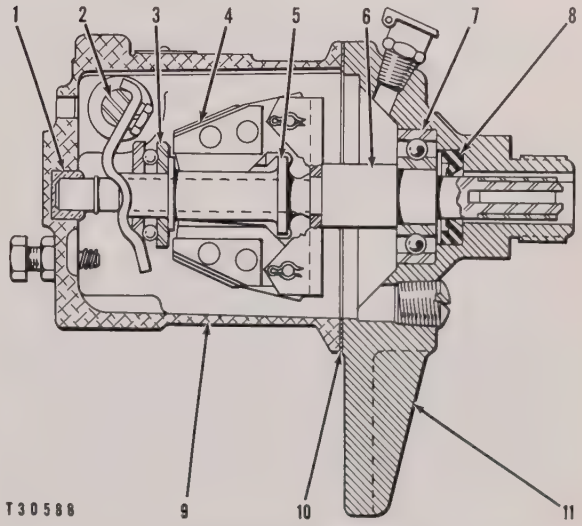

SERVICING GOVERNOR
1–Bearing. 2–Yoke shaft. 3–Bearing. 4–Weight. 5–Sleeve. 6–Shaft. 7–Bearing. 8–Seal. 9–Body. 10–Gasket. 11–Flange.

4. Inspect the bearing **(1)**, and replace if necessary.
5. Check the bearings and seals on the yoke shaft **(2)** for wear and/or leakage, and replace if necessary.
6. Assembly is the reverse of disassembly. Replace the gasket **(10)**.

DISASSEMBLY AND ASSEMBLY OF HYDRAULIC SERVO MECHANISM

1. Remove the cover **(1)**, the link **(2)**, and remove the piston and valve.
2. Drive the dowel **(6)** from the hole **(4)**.
3. Remove the valve **(5)** from the piston **(3)**.
4. Assemble in reverse order of disassembly, replacing any worn or damaged parts.

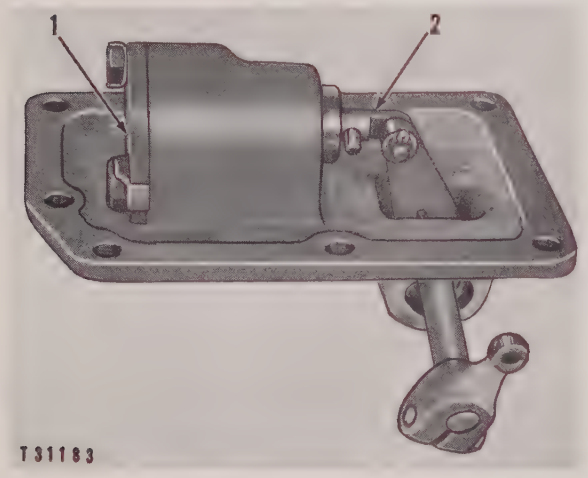

PREPARING TO DISASSEMBLE HYDRAULIC SERVO MECHANISM
1–Cover. 2–Link.

NOTE

The dowel **(6)** does not go through the valve, but rather, aligns with the groove nearest the link. This allows initial movement of the valve without moving the piston.

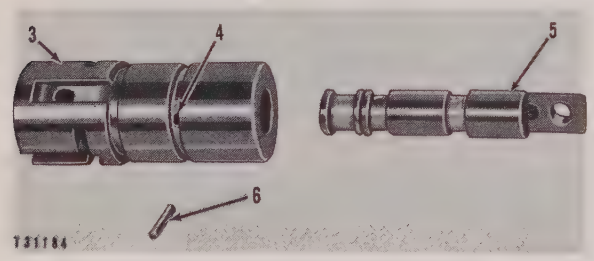

DISASSEMBLY OF HYDRAULIC SERVO MECHANISM
3–Piston. 4–Hole. 5–Valve. 6–Dowel.

NOTE

When assembling the hydraulic servo mechanism, use a small punch to stake the metal at each end of the hole **(4)** so the dowel **(6)** will not come out.

ADJUSTMENT

In order to obtain the proper performance from an output shaft governor, the governor and connecting linkages must be properly adjusted after being installed on the engine. It is possible by proper adjustment to obtain a reasonably close regulation of the governor and still obtain stable but "snappy" governor response to output shaft load changes.

The following adjustments must be made: linkage adjustment, low speed setting, high speed setting, regulation, and surge. For any given output shaft governor setting, the regulation is the range or spread between the torque converter output shaft speed at no load and the output shaft speed at full load, with the diesel engine governor control in the full open position. If the regulation is too close, surging will result.

The bumper screw may be used to remove surge at high idle, but its use is recommended only if increasing dimension **(A)** is ineffective. The necessity of a bumper spring at high idle in many cases signifies excessive friction in the linkage, rack or servo mechanism, or improper linkage adjustment.

CAUTION

The converter will overheat when driven at high idle (no load) speeds exceeding 1000 RPM for prolonged periods of time.

The adjustments in steps 1 through 9 should be completed before starting the engine.

1. Disconnect the control cable from the lever **(10)**, and the rod end **(2)** from the lever **(1)**.
2. Adjust the rate adjusting screw **(4)** in the lever **(10)** until the spring **(7)** is in slight tension. This provides a good starting point.
3. Adjust the low speed screw **(9)** as required to place enough tension on the spring **(7)** to position the output shaft governor weights in the closed position with lever **(3)** rotated to the fuel rack open position.
4. Move the diesel engine governor control lever to the full open position.
5. Rotate the lever **(1)** in a clockwise direction until all the slack in the linkage between the lever and the fuel rack is removed. The internal rack follower rod should just be touching the fuel rack. Never apply enough force to move the fuel rack. Observe this position by removing the front side cover below the governor.
6. With the lever **(1)** held in this position, adjust the rod end **(2)** until the bolt hole in the end of the rod end aligns with the bolt hole in the lever **(1)**. Then turn the rod end **(2)** down two full turns on its stud.

7. After properly adjusting the rod end **(2)**, connect it to the lever **(1)**.

NOTE

The rod end adjustment must be made without moving lever **(3)** from the full rack open position described in Step 3. The rod end adjustment must be made correctly to permit the fuel rack to reach the high idle position.

8. Back out the bumper screw **(6)** until approximately 3/4" of the screw protrudes from the governor housing.

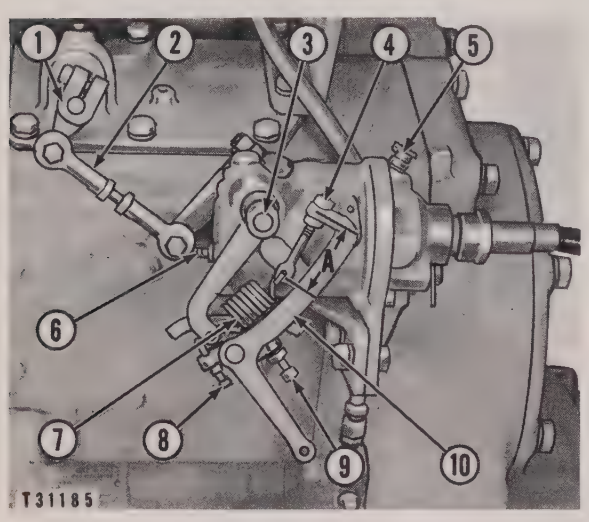

OUTPUT SHAFT GOVERNOR ADJUSTMENT
1–Lever. 2–Rod end. 3–Lever. 4–Rate adjusting screw. 5–Oil cup. 6–Bumper screw. 7–Governor spring. 8–High speed adjusting screw. 9–Low speed adjusting screw. 10–Lever. A–Reference point.

9. Fill the output shaft through the oil cup **(5)** with SAE No. 30 lubricating oil. The oil level can be checked by removing the small oil level plug in the drive end of the governor housing.

10. Start the engine and after a reasonable warm-up period move the diesel engine governor control lever to the high idle position.

11. Bring the output shaft up to the maximum desired high speed (no load) setting by screwing the low speed adjusting screw **(9)** in against the stop bracket (temporarily). Output shaft speed at maximum horsepower will normally be about 100 RPM lower than this setting.

12. If the engine is stable (does not surge), proceed with Step 13. If an objectionable surge does exist, loosen the lock nuts on the rate adjusting screw **(4)** and **increase** Dimension "A" by about 1/16 inch. Retighten the lock nuts and bring the converter output shaft back to the desired speed, as described in Step 11. Repeat this procedure until the surge is removed or lowered to an acceptable level. If the surge cannot be lowered in this manner, repeat Steps 2 and 11, and then screw the bumper **(6)** inward until the surge just disappears. Lock the bumper into position. Never screw the bumper in any further then just necessary to remove the surge.

13. With the output shaft running at the desired high speed setting, turn the high speed adjusting screw **(8)** until the end of the screw contacts the stop bracket. Lock the high speed screw in this position.

NOTE

If the governor bumper screw **(6)** was used to remove surge in Step 12, omit Step 14. If the bumper screw was not used, proceed with Step 14.

14. Back the low speed screw **(9)** out of the lever **(10)** until the output shaft speed is reduced to the desired RPM. Screw the bumper screw inward until contact between the bumper and the yoke inside the governor is felt. Lock the screw in this position.

15. Back the low speed screw **(9)** out of the lever **(10)** until the desired output shaft low speed is reached. Lock the low speed screw in this position.

OUTPUT SHAFT GOVERNOR DRIVE

The output shaft governor is driven through a flexible cable connected between the governor and the governor drive shaft. The governor drive shaft is located in the torque converter output shaft housing and is supported at each end by a bearing pressed into a bore in the housing. A large ring gear on the torque converter output shaft meshes with a gear machined as an integral part of the drive shaft and turns the drive shaft 2 1/2 revolutions for each revolution of the output shaft.

Disassembly

1. Remove the flexible cable **(2)**, setscrew **(3)**, adapter **(1)** and O-ring seal located on the adapter from the torque converter housing.

2. Place a short length of standard 1/2" pipe **(4)** over the threaded portion of the drive shaft.

3. Drive the shaft **(7)** in until the lower bearing **(8)** and plug **(9)** are driven out of the bore at the lower right hand side of the output shaft housing.

4. Drive the shaft in the opposite direction until the upper bearing **(6)** has been driven out of the bore. Remove the bearing and shaft.

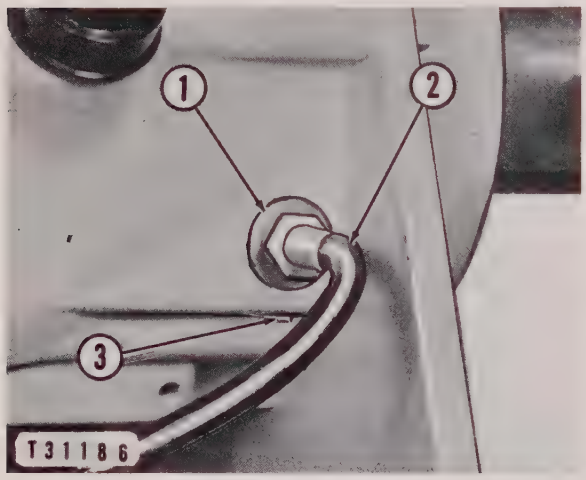

PREPARING TO REMOVE GOVERNOR DRIVE
1–Adapter. 2–Flexible cable. 3–Setscrew.

CAUTION

Use care when driving the shaft to prevent damage to the governor drive gear and/or output shaft ring gear.

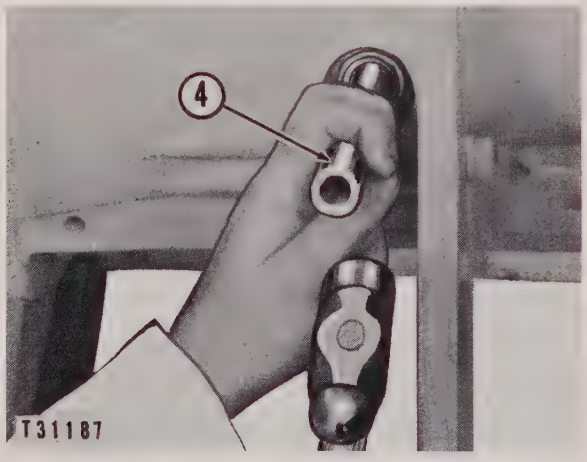

PREPARING TO REMOVE GOVERNOR DRIVE
4–½" pipe.

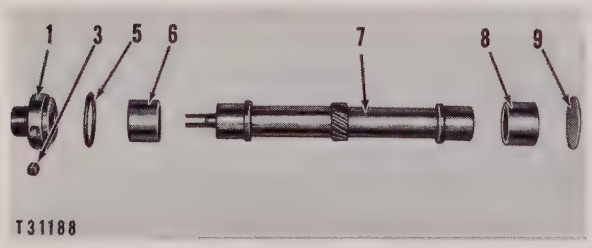

DISASSEMBLY OF GOVERNOR DRIVE
1–Adapter. 3–Setscrew. 5–O-ring seal. 6–Upper bearing. 7–Shaft. 8–Lower bearing. 9–Plug.

Assembly

Check all parts for wear and replace if worn or damaged. Use a new O-ring seal **(3)** and plug **(10)**.

1. Drive the lower bearing **(5)** into the bore, using a short length of standard 1" pipe **(2)** placed over the threaded portion of the adapter **(1)**.

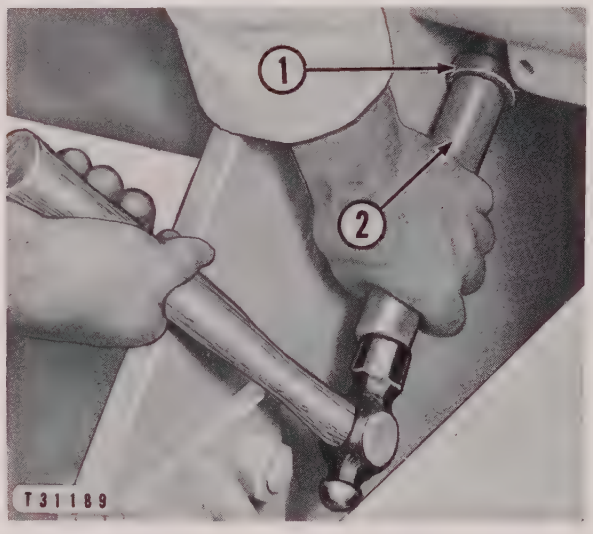

INSTALLING LOWER BEARING
1–Adapter. 2–1" pipe.

2. Remove the adapter and drive the plug **(10)** into place, using a suitable sealer or liquid gasket material around the edge.

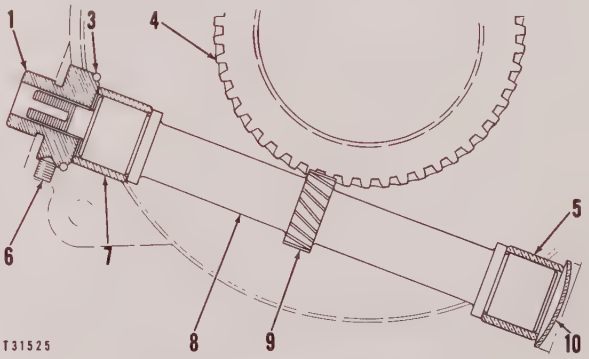

CROSS SECTION OF OUTPUT SHAFT GOVERNOR DRIVE
1–Adapter. 3–O-ring seal. 4–Ring gear. 5–Lower bearing. 6–Setscrew. 7–Upper bearing. 8–Drive shaft. 9–Governor drive gear. 10–Plug.

3. Install the drive shaft **(8)** and drive the upper bearing **(7)** into its bore using the 1" pipe and adapter. Drive in until the adapter is correctly positioned in relation to the setscrew hole.

4. Remove the adapter and check the end clearance of the shaft. The proper end clearance is 1/32". If necessary, place a short length of

standard 1/2" pipe over the threaded portion of the shaft and lightly tap the pipe until the end clearance is correct. This will correctly position the lower bearing.

CAUTION

Use care when driving the shaft to prevent damage to the governor drive gear **(9)** and/or output shaft ring gear **(4)**.

5. Install the O-ring seal **(3)**, adapter, setscrew **(6)**, and flexible cable.

Air Starting System

INTRODUCTION

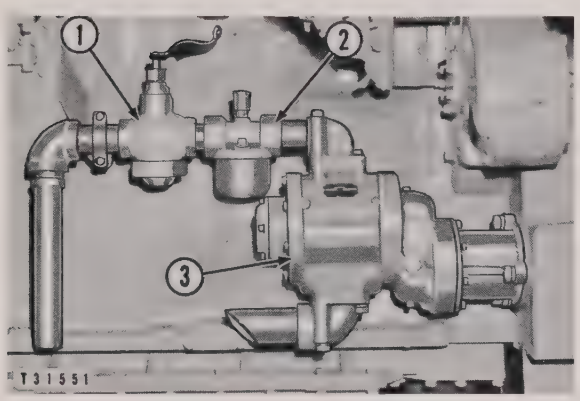

AIR STARTING SYSTEM — LEFT SIDE
1–Balanced whistle valve. 2–Oiler. 3–Air motor.

The air starting system is available for either left or right side mounting. The illustrations show the system for the left side, mounted on the engine. Fig. A, however, shows the position of the parts assembled in the starting system for the right side.

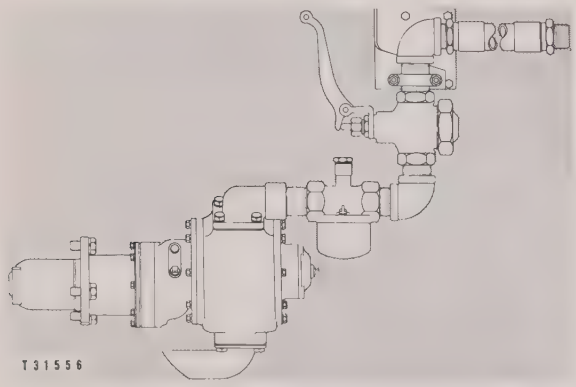

FIG. A
AIR STARTING SYSTEM — RIGHT SIDE

Fig. B shows the system mounted on the left, and Fig. C shows the system mounted on the right side of the engine.

Air for the starting system is furnished by an auxiliary compressor. Air is delivered through a receiver to a pressure regulating valve, where the pressure is regulated to a suitable starting pressure. The balanced whistle valve **(1)** controls the air passing to the air motor **(3)**. As the air passes through the oiler **(2)**, it picks up oil in the form of a spray, which is deposited on the rotor and vanes of the air motor. The flow of air through the air motor is shown in Fig. D.

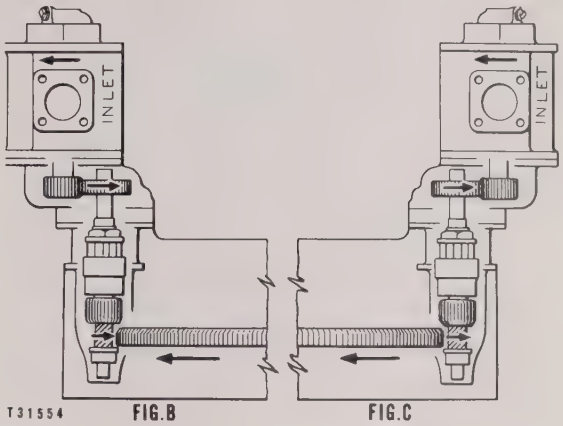

AIR STARTING SYSTEMS (SCHEMATIC)

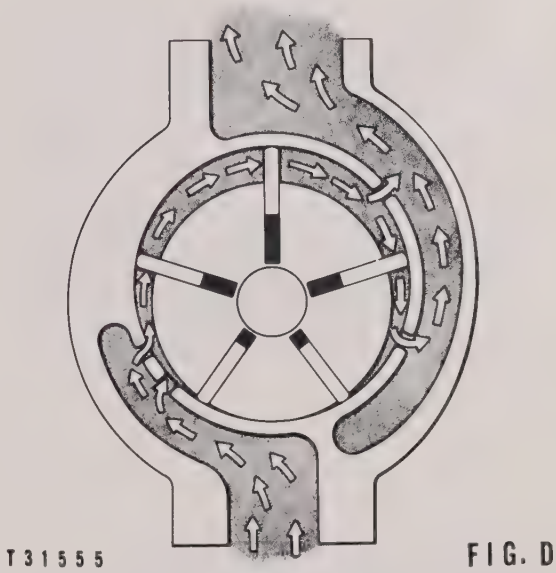

FLOW OF AIR THROUGH STARTING MOTOR
— FRONT VIEW

REMOVAL AND INSTALLATION

1. Disconnect the line **(4)** from the air supply.
2. Remove the bolts **(1)** and remove the clamp **(2)** which secures the pipe to the bracket assembly.
3. Remove the bolts **(3)** which secure the elbow **(9)** to the air starting motor **(5)**.
4. Remove the balanced whistle valve **(7)**, oiler **(8)**, elbow **(9)** and connecting piping as a unit.
5. Remove the bolts **(6)** which secure the air starting motor assembly **(5)** to the flywheel housing.
6. Install all parts in reverse order of removal. Check for air leaks.

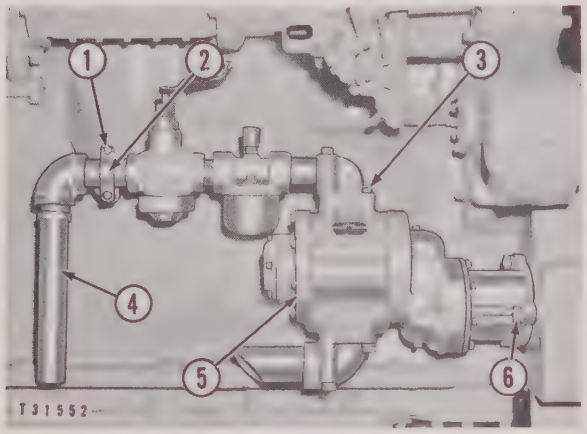

PREPARING TO REMOVE AIR STARTING SYSTEM
1–Bolt. 2–Clamp. 3–Bolt. 4–Line. 5–Air starting motor. 6–Bolt.

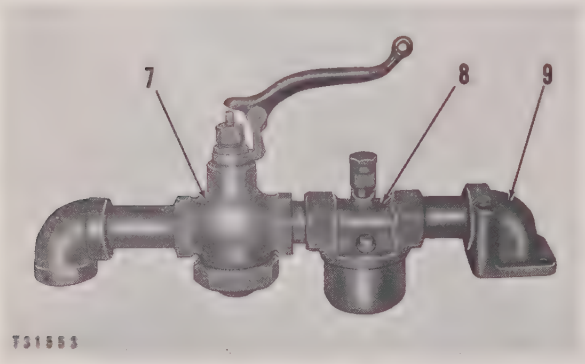

BALANCED WHISTLE VALVE AND OILER
7–Balanced whistle valve. 8–Oiler. 9–Elbow.

DISASSEMBLY AND ASSEMBLY

Balanced Whistle Valve

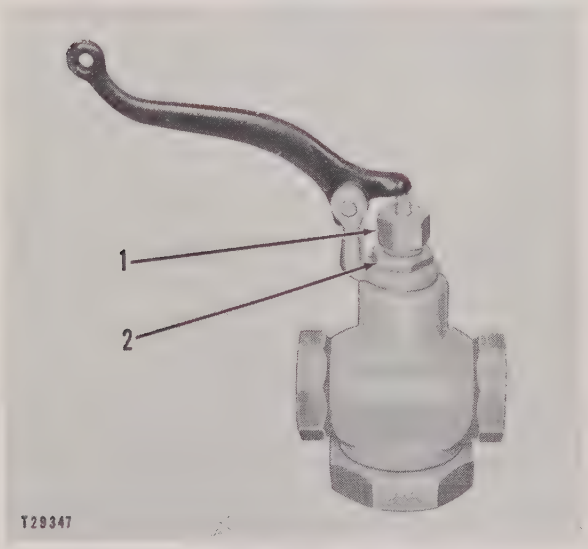

PREPARING TO DISASSEMBLE BALANCED WHISTLE VALVE
1–Nut. 2–Locknut.

1. Remove the valve from the piping connections.
2. Loosen the locknut **(2)** and remove the nut **(1)**.
3. Remove the locknut **(2)**, fulcrum **(12)**, gland **(11)** packing **(10)**, and adapter **(9)**.

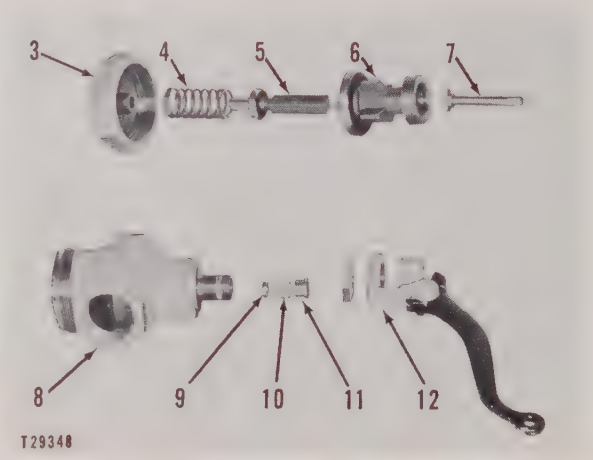

BALANCED WHISTLE VALVE — EXPLODED VIEW
3–Cap. 4–Spring. 5–Holder. 6–Holder. 7–Stem. 8–Body. 9–Adapter. 10–Packing. 11–Gland. 12–Fulcrum.

4. Remove the cap **(3)**, spring **(4)**, holder **(5)**, holder **(6)** and stem **(7)** from the body **(8)**.

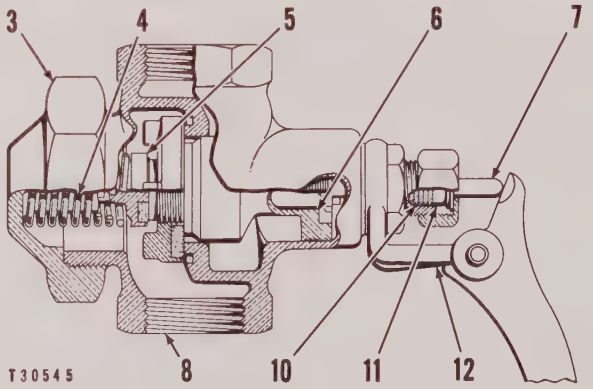

BALANCED WHISTLE VALVE (CROSS-SECTION)
3–Cap. 4–Spring. 5–Holder. 6–Holder. 7–Stem. 8–Body. 10–Packing. 11–Gland. 12–Fulcrum.

5. Assemble in the reverse order of disassembly, replacing any damaged or worn parts.

Oiler

The air starting motor oiler automatically meters oil into the air stream in the form of a fine fog, when the balanced whistle valve is opened, to lubricate the air motor vanes. An air director tube in the air passage through the body delivers pressure above the oil in the bowl. Oil flows from the bowl through a tube and drilled passage to a chamber under the top plug on the body. From the chamber, oil flows

through the oil drip gland which meters the flow of oil to about four drops per minute. Oil flows only when air is flowing to the air motor.

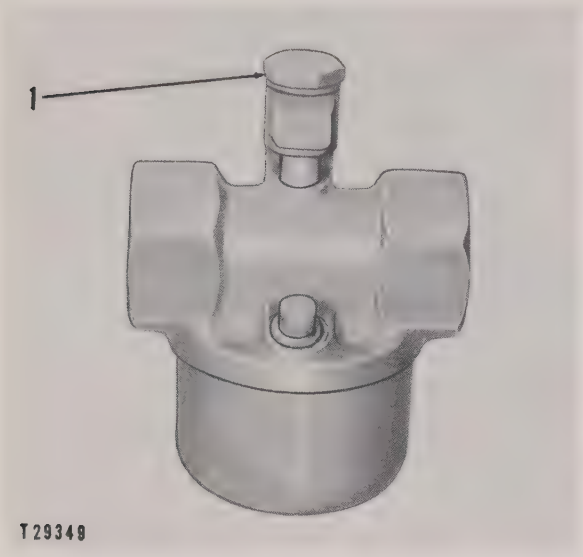

PREPARING TO DISASSEMBLE OILER
1–Plug.

1. Remove the plug **(1)**.
2. Remove the gland **(2)** and the gasket **(3)**.
3. Inspect all parts for wear or damage and replace all gaskets.
4. Assemble in the reverse order of disassembly. Refill the bowl with oil if necessary.

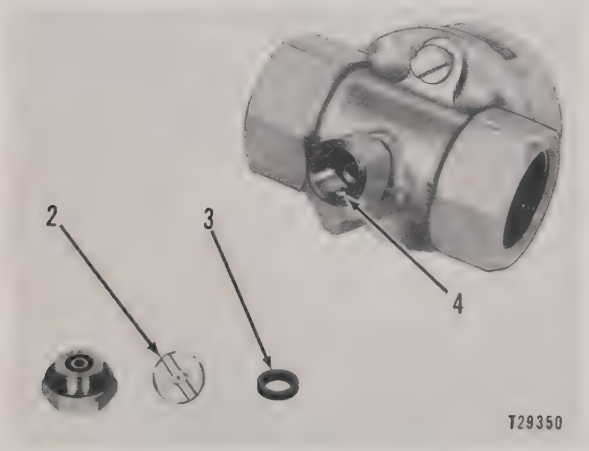

REMOVING THE GLAND
2–Gland. 3–Gasket. 4–Oil hole.

NOTE

The gland **(2)** must be below the oil hole **(4)** when assembled.

Air Starting Motor

The assembly of some of the external parts of the starting motor may differ from the illustrations shown, depending on the mounting position of the starting system.

1. Mark the mating parts as shown.
2. Remove the bolts **(2)** and remove elbow **(1)**.
3. Remove the bolts **(4)** and remove the drive housing **(3)**.
4. Remove the plate **(5)** and remove the drive shaft bearing.

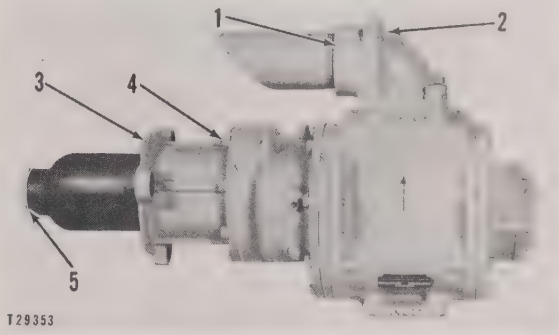

PREPARING TO DISASSEMBLE AIR STARTING MOTOR ASSEMBLY
1–Elbow. 2–Bolt. 3–Housing. 4–Bolt. 5–Plate.

5. Move the ring **(8)** off the screw **(7)** and remove the screw.
6. Remove the drive **(6)**.

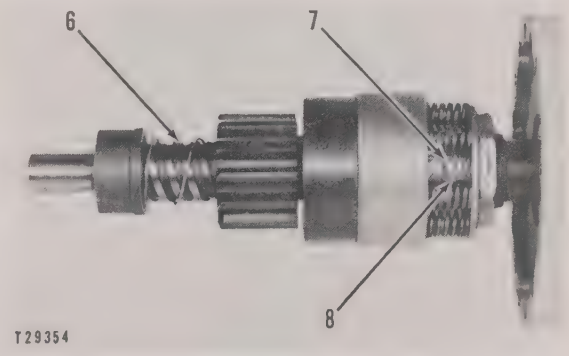

REMOVING DRIVE
6–Drive. 7–Screw. 8–Ring.

7. Remove the hollow head screws and remove the cover **(9)**.
8. Bend the lockwasher **(14)**, remove the nut **(15)**, and move the gear **(13)** off the shaft **(10)**.
9. Remove the retainer **(12)** and press the shaft **(10)** out of the bearing **(11)**.

10. Press the bearing **(11)** out of the cover **(9)**.

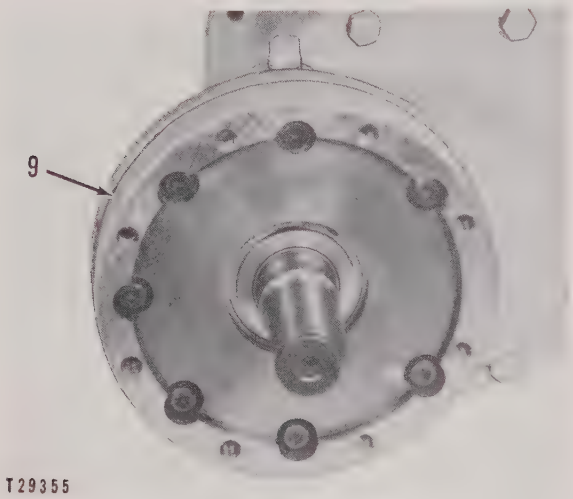

REMOVING COVER
9–Cover.

11. Remove the cover which is located over the end of the shaft **(18)**, bend the lockwasher, and remove the nut.

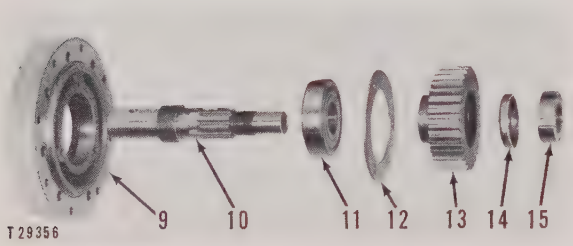

REMOVING SHAFT
9–Cover. 10–Shaft. 11–Bearing. 12–Retainer. 13–Gear. 14–Lockwasher. 15–Nut.

12. Remove the bolts which secure the plate **(19)** to the housing **(20)**. Remove the plate and the bearing **(16)** from the shaft **(18)** by using an 8B7548 Puller **(17)** and two ¼″ - 20 (NC) bolts 5″ long as shown.

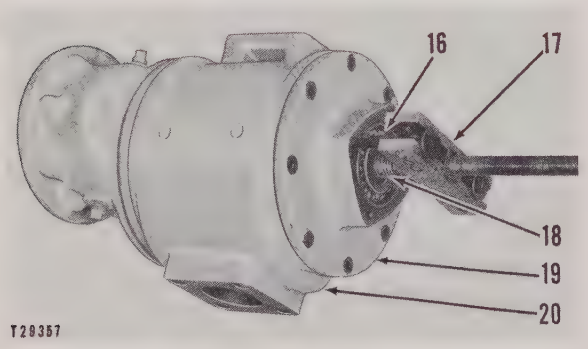

REMOVING PLATE
16–Bearing. 17–Puller. 18–Shaft. 19–Plate. 20–Housing.

13. Remove the gear housing **(24)** by removing the bolts **(21)** and **(22)**.

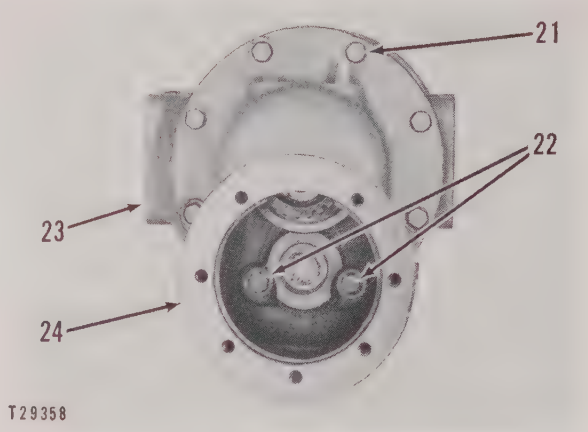

REMOVING THE HOUSING
21–Bolt. 22–Bolts. 23–Housing. 24–Housing.

14. Remove the air motor housing **(23)**.

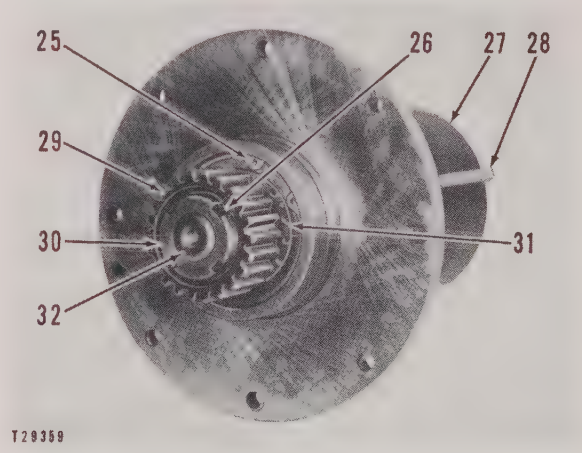

REMOVING NUT
25–Ring. 26–Lockwasher. 27–Rotor. 28–Vane. 29–Gear. 30–Nut. 31–Bearing. 32–Shaft.

15. Remove the vanes **(28)** from the rotor **(27)**.

16. Bend the lockwasher **(26)** and remove the nut **(30)** and the lockwasher.

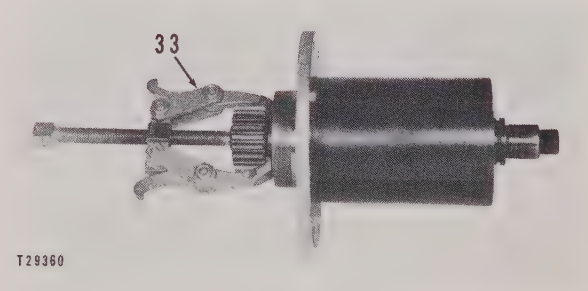

REMOVING GEAR
33–Puller.

17. Remove the gear **(29)** by using an 8B7547 Puller **(33)** as shown.

18. Remove the snap ring **(25)** and move the bearing **(31)** off the shaft **(32)**.

19. Inspect all parts for wear or damage and replace all the gaskets.

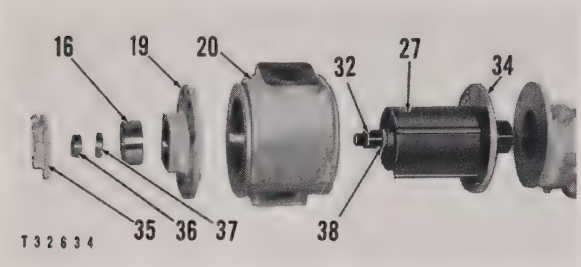

PREPARING TO ASSEMBLE AIR STARTING MOTOR
16–Bearing. 19–Plate. 20–Housing. 27–Rotor. 32–Shaft. 34–Plate. 35–Cover. 36–Nut. 37–Lockwasher. 38–Ring.

20. When the motor is reassembled, there must be .003″ end clearance at **(40)** between the plate **(19)** and rotor **(27)**. If no new parts are being installed, install the same number of shims as removed. If new parts are installed, proceed with Step 21.

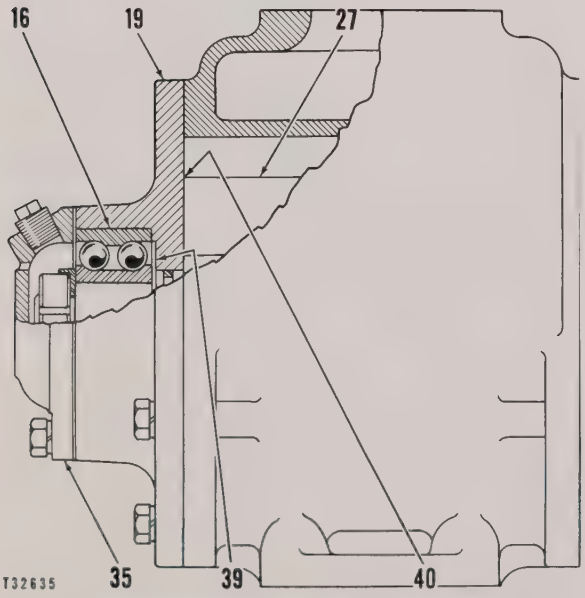

DETERMINING ROTOR END CLEARANCE
16–Bearing. 19–Plate. 27–Rotor. 35–Cover. 39–Shims. 40–.003″ end clearance.

CAUTION

Carefully install the plates **(19)** and **(34)** on the rotor shaft to avoid damaging the rings **(38)** which seal the ends of the rotor.

21. As a starting point, install .009″ shims **(39)** on the shaft **(32)**. Press or drive bearing **(16)** into the plate **(19)**. Install this assembly on the shaft. Do not install housing **(20)**.

22. Install cover **(35)** tight on the end plate to be sure the plate and its bearing are tight against the shims. Do not install the nut **(36)** or lockwasher **(37)**. Measure the clearance at **(40)**, and if greater than .003″, remove shims. If less than .003″, add shims.

23. When the correct clearance is obtained, remove the installed parts, and install the housing **(20)**. Complete the assembly of the motor, adding the recommended ball and roller bearing lubricant to bearing **(16)**.

Pressure Regulating Valve

This pressure regulating valve is available for use with the air starting system, if desired.

1. Loosen the adjusting bolt **(1)** to relieve spring pressure.

2. Remove the bolts **(3)** which secure the regulating chamber **(2)** to the body **(4)**.

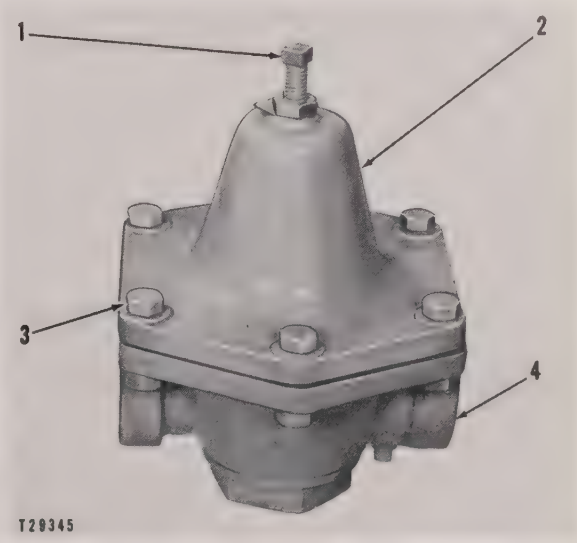

PREPARING TO DISASSEMBLE PRESSURE REGULATING VALVE
1–Bolt. 2–Regulating chamber. 3–Bolt. 4–Body.

3. Remove the regulating chamber **(2)**, button **(5)**, spring **(6)**, plate **(7)**, diaphragm **(8)**, and button **(9)**.

4. Remove the plug assembly **(14)**.

5. Remove the spring **(13)**, piston assembly **(12)**, cylinder **(11)**, and screen **(10)**.

6. Assemble in the reverse order of disassembly.

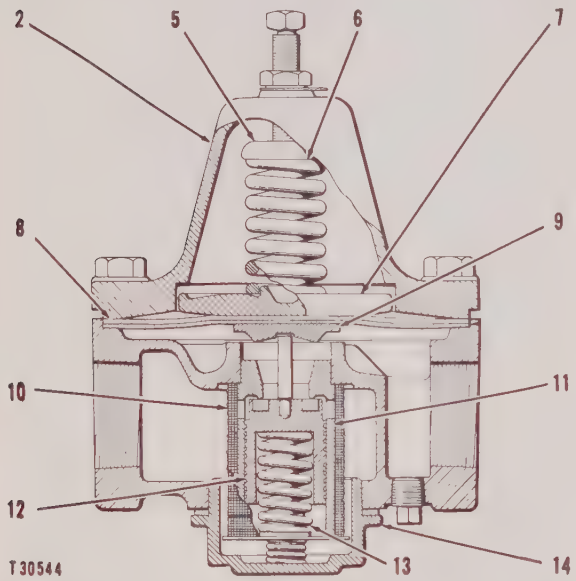

PRESSURE REGULATING VALVE (CROSS-SECTION)
2–Regulating chamber. 5–Button. 6–Spring. 7–Plate. 8–Diaphragm. 9–Button. 10–Screen. 11–Cylinder. 12–Piston assembly. 13–Spring. 14–Plug assembly.

Fuel Priming Pump

The fuel priming pump is a part of electric and air starting arrangements on the engine. The priming pump is located in front of the fuel injection pump housing. For the instructions on priming the engine, consult the Operation and Maintenance Instructions.

OPERATION

The fuel priming pump **(4)** is mounted on the base **(5)**, which is mounted to the fuel transfer pump and serves as a fuel director, depending on whether the priming pump or transfer pump is being used. When priming the fuel system, fuel is pumped through the fuel supply line **(7)**, through the base **(5)**, and discharged through line **(1)** into the fuel filter cover **(2)**. The cover directs fuel through passages to the fuel filters.

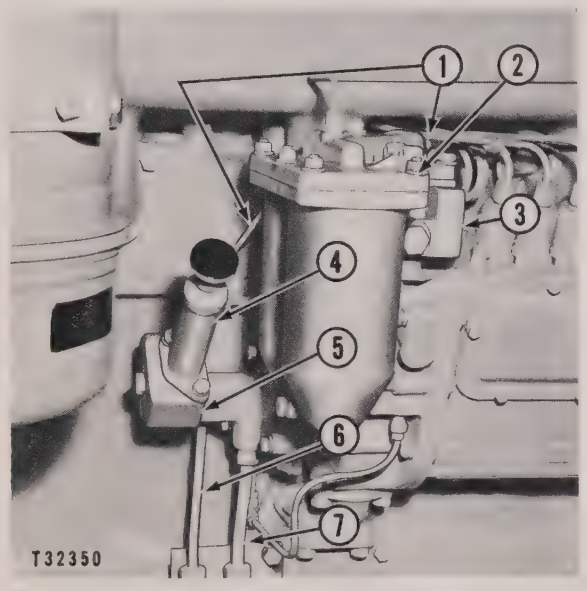

FUEL PRIMING PUMP AND LINES
1–Discharge line from priming pump to filters. 2–Filter cover. 3–Fuel adapter. 4–Priming pump. 5–Base. 6–Excess fuel return line. 7–Fuel supply line.

When the plunger is pulled out, fuel enters the pump base through passage **(14)** and into passage **(12)**. Suction lifts ball check valve **(11)** off its seat and allows fuel to pass through hole **(9)** in the retainer above the ball and into the plunger barrel of the pump. Opening **(8)** is blocked by the ball check valve **(10)**, which is held against its seat by suction caused by the plunger being pulled out.

As the plunger is pushed down, the ball check valve **(11)** is seated and blocks the fuel. The increased pressure unseats ball check valve **(10)** and fuel is discharged through opening **(8)** on the rear face of the base into line **(1)**. There is not sufficient clearance in the transfer pump to permit passage of fuel when the engine is not operating.

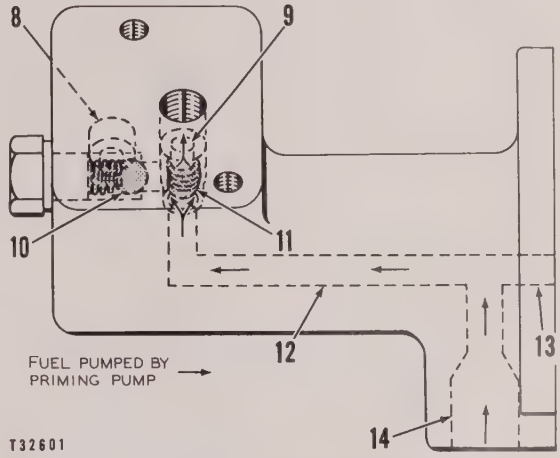

FLOW OF FUEL THROUGH THE BASE WHEN PULLING PLUNGER OUT
8–Opening (on back face of base) to fuel filters. 9–Hole in retainer. 10–Ball check valve. 11–Ball check valve. 12–Passage to priming pump. 13–Passage to transfer pump. 14–Inlet from supply tank.

When the engine is operating, fuel enters the base through passage **(14)** and flows through passage **(13)** into the transfer pump.

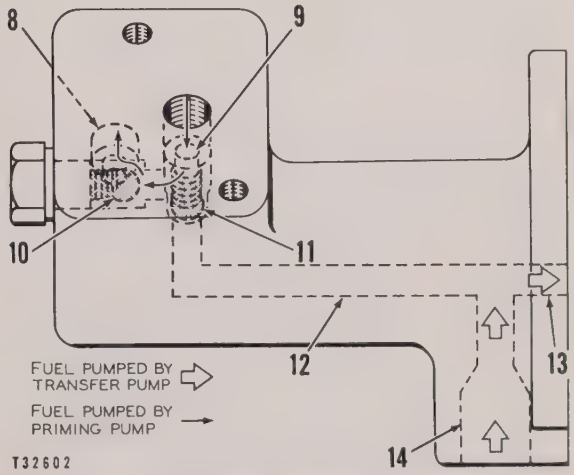

FLOW OF FUEL WHEN PUSHING PLUNGER DOWN
8–Opening (on back face of base) to fuel filters. 9–Hole in retainer. 10–Ball check valve. 11–Ball check valve. 12–Passage to priming pump. 13–Passage to transfer pump. 14–Inlet from supply tank.

A ball check valve **(15)** located in the top of the fuel filter adapter **(3)** under the filter cover **(2)** prevents circulation of air through the fuel system when operating the fuel priming pump. The valve remains

closed and thus forces the air to be directed to the filter housing where it can be bled out.

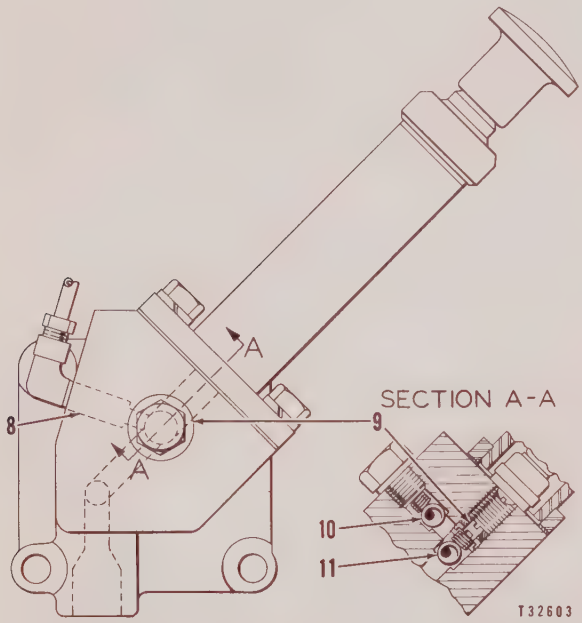

LOCATION OF BALL CHECK VALVES IN BASE
8–Opening (on back face of base) to fuel filters. 9–Hole in retainer. 10–Ball check valve. 11–Ball check valve.

When the engine is started, fuel supplied by the transfer pump unseats the valve **(15)** and passes through passages in the filter cover to the filters. By-pass valve **(16)** opens to allow excess fuel to return to the tank through passage **(17)** which connects to the return line **(6)**.

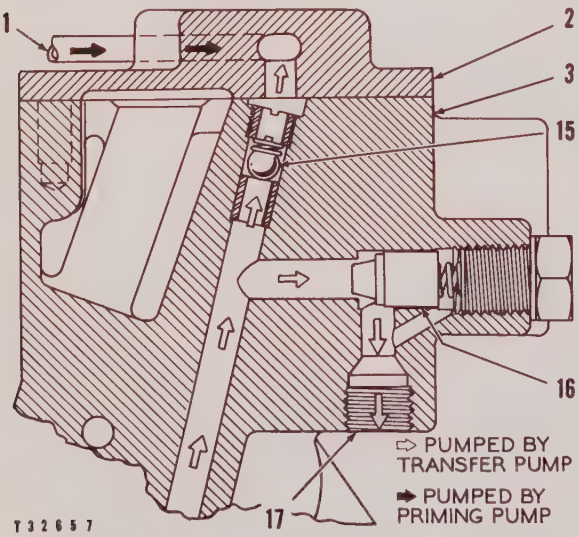

CROSS SECTION OF TOP OF FUEL ADAPTER ASSEMBLY (REAR VIEW)
1–Discharge line from priming pump. 2–Filter cover. 3–Fuel adapter. 15–Ball check valve. 16–By-pass valve. 17–Return passage.

REMOVAL AND INSTALLATION

Remove the bolt **(4)** that secures the fuel line assembly **(3)** to the engine and disconnect the fuel supply line **(2)**.

Remove the bolts **(1)** that secure the fuel priming pump and remove the pump.

Install the fuel priming pump in the reverse order of removal, replacing any damaged gaskets.

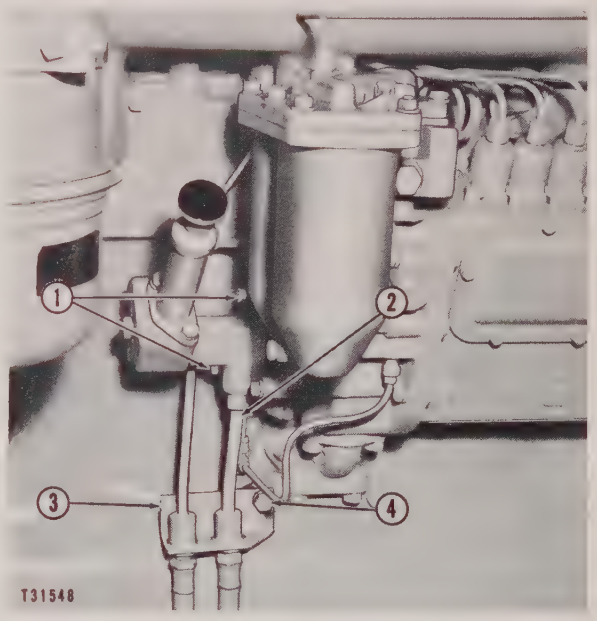

PREPARING TO REMOVE FUEL PRIMING PUMP
1–Bolts. 2–Fuel supply line. 3–Fuel line assembly. 4–Bolt.

DISASSEMBLY AND ASSEMBLY

1. Remove the bolts **(2)** that secure the fuel priming pump barrel assembly **(3)** to the fuel prim-

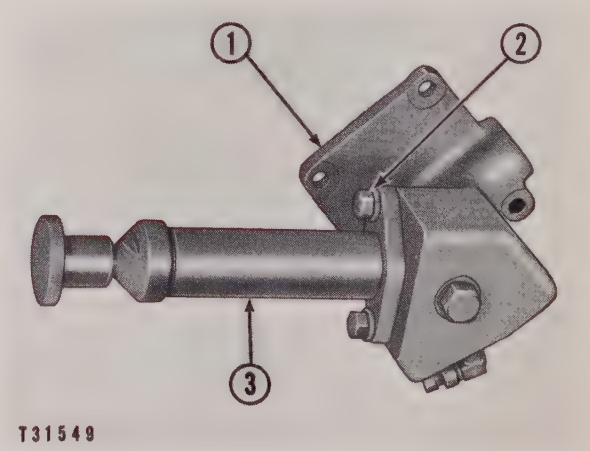

FUEL PRIMING PUMP DISASSEMBLY
1–Fuel priming pump base. 2–Bolt. 3–Fuel priming pump barrel assembly.

ing pump base **(1)** and remove the barrel assembly.

2. Remove the bolt **(4)**, washer **(5)**, and retainer **(8)**, from the fuel priming pump base.

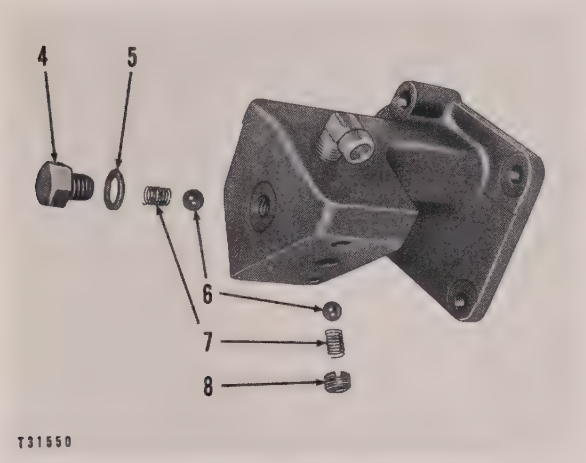

REMOVING THE BALL CHECK VALVES
4–Bolt. 5–Washer. 6–Balls. 7–Springs. 8–Retainer.

3. Remove the springs **(7)** and balls **(6)**.
4. Unscrew the cap **(16)** from the barrel **(9)**, and remove the cap and rod.
5. Remove the screw **(10)** and washer **(11)** from the bearing **(12)**, and remove the bearing from the rod **(24)**.
6. Remove the nut **(13)**, washer **(14)**, spring **(15)**, cup **(18)**, washer **(19)**, cup **(20)**, spring **(21)**, washer **(22)**, the nut **(23)**, and the cap **(16)** from the rod **(24)**.
7. The handle **(17)** can be removed from the rod **(24)** by driving out the roll pin **(25)**.
8. Assemble the barrel assembly in the reverse order of disassembly, replacing any parts which are damaged or show excessive wear.

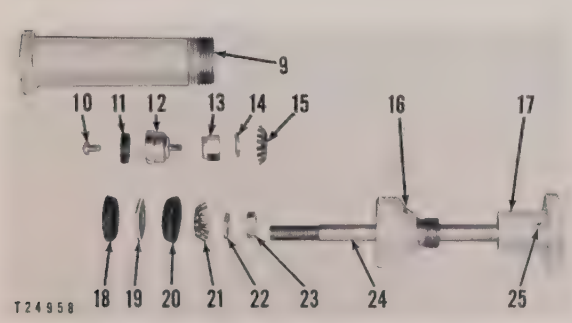

DISASSEMBLING THE BARREL ASSEMBLY
9–Barrel. 10–Screw. 11–Washer. 12–Bearing. 13–Nut. 14–Washer. 15–Spring. 16–Cap. 17–Handle. 18–Cup. 19–Washer. 20–Cup. 21–Spring. 22–Washer. 23–Nut. 24–Rod. 25–Roll pin.

Flexible Drive Coupling

The flexible drive coupling cushions impact and reduces torque fluctuations between the engine and driven equipment. Construction of the coupling provides flexibility through elasticity of a rubber gland. The coupling also corrects any slight misalignment between the engine and driven equipment.

The flexible coupling can be used to connect generators, marine gears or other types of driven equipment to the engine. Inflated with glycerin and sealed, the coupling requires no maintenance and attention.

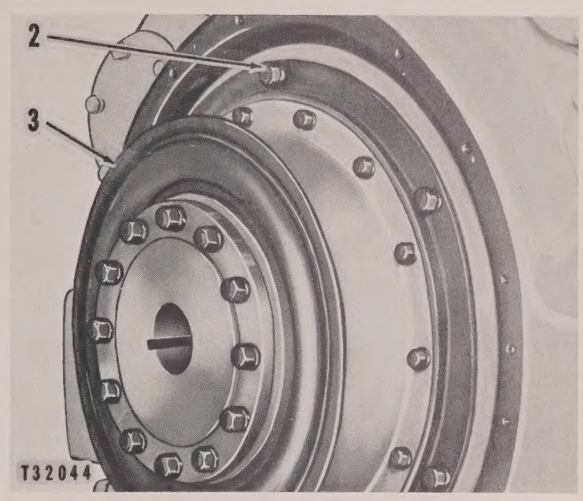

FLEXIBLE COUPLING REMOVAL
2–Bolt. 3–Flexible coupling.

REMOVAL AND INSTALLATION

1. Remove the covers **(1)**, if so equipped.

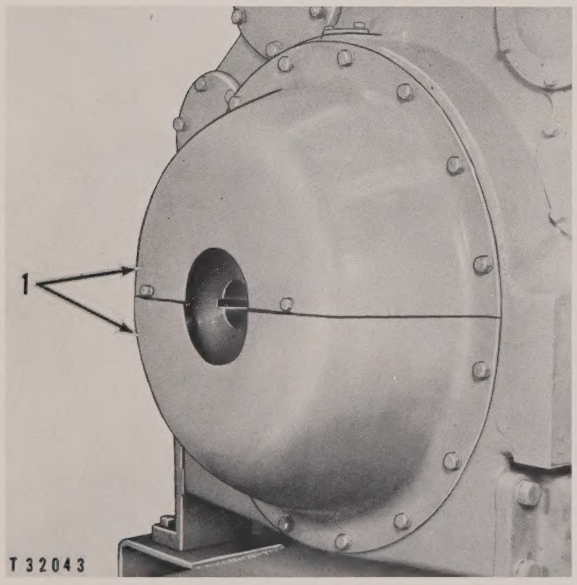

PREPARING TO REMOVE FLEXIBLE COUPLING
1–Covers.

2. Attach a suitable hoist and remove the bolts **(2)**.
3. Remove the flexible coupling **(3)** as an assembly.
4. Install in the reverse order of removal.

DISASSEMBLY AND ASSEMBLY

Remove the bolts **(1)** and **(2)**.

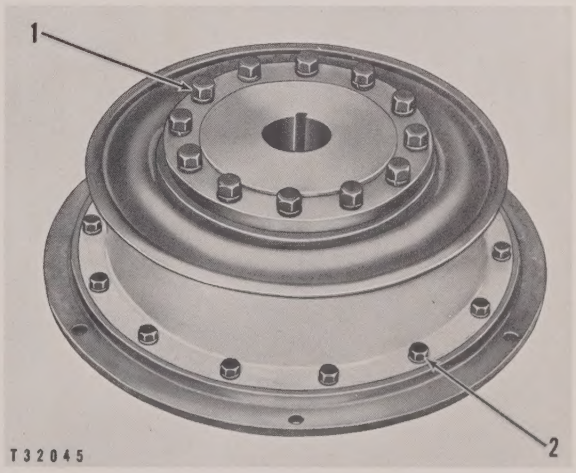

FLEXIBLE COUPLING
1–Bolt. 2–Bolt.

Separate the adapter ring **(3)**, coupling **(4)** and hub **(5)**.

NOTE

The rubber gland **(6)** is filled and sealed when manufactured. It is bonded to the coupling and not removable. If the gland is damaged or needs replacing, the coupling and gland must be replaced as a unit.

Assemble in the reverse order of disassembly.

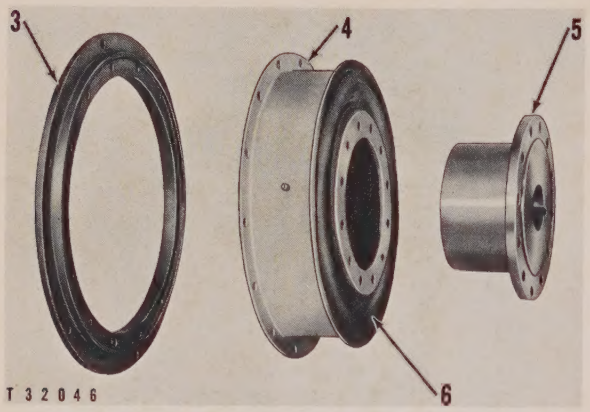

FLEXIBLE COUPLING DISASSEMBLY
3–Adapter ring. 4–Coupling. 5–Hub.
6–Rubber gland.

www.manualsplus.com
1016717